

Deep Exploration CAD and Standard Edition User Reference

Published 8 May, 2006

Copyright © Right Hemisphere 2006. All Rights Reserved.

Contents

Deep Exploration CAD and Standard Edition User Reference 1

Contents 1

Introduction 7

Copyright and Trademarks....9
System Requirements....13
Modules....15
Installation....17
Trial Period....18
Registration and Activation....19
Assumptions....21
Conventions....22
Documentation....25
Using the Reference Online....26
Support....33
Updating....34
Secure Online Ordering....36

Deep Exploration Overview 37

What's New in Deep Exploration? 38

Getting Started with Deep Exploration 39

Using Deep Exploration 40

Creating New Scenes....41
Opening Files....42
Importing Files....43
Searching for Files....50
Merging Files....54
Reloading Files....55
Saving Files....56
Viewing Scenes....61
Objects and Materials....84
Animation....101
Audio and Video Files....106
Benchmarking a File....107
CADTools....109
Callouts....126
Embedding Content....133
Illustration Tools....134
Layers....139
Markups....141
Measurements....145
High Dynamic Range Images....149
Plugin Manager....153
Primitives and Modifiers....155
Publishing Web Pages....156
Realight Tool....157
Slide Shows....160
Shaders....161
Steps....164
Teamwork Tools....167

UV Mapping ... 172
Gateway Module ... 174
PDF Publishing Module ... 188
PMI Module ... 194
Closing Deep Exploration ... 197

User Interface 198

Menu Bar ... 199
Workspace ... 240
Explorer Bar ... 241
Controls ... 253
Toolbars ... 294
File List ... 310
Right-Click Menus ... 315
Status Bar ... 344

Customizing the User Interface 345

External Application Plugins 349

3ds max DCOM Plugin ... 350

Command Line Arguments 352

Open a File ... 352
Print a File ... 352
Browse a Folder ... 353
Display a Slide Show ... 353
Start in Standard Mode ... 353
Start in Full-Screen Mode ... 353
Start in View Mode ... 354

Keyboard Shortcuts 355

2D Navigation Shortcuts ... 356
3D Navigation Shortcuts ... 357
Display Menu Shortcuts ... 358
File Shortcuts ... 359
General Shortcuts ... 360
Grid Menu Shortcuts ... 361
Lights Menu Shortcuts ... 362
Materials Menu Shortcuts ... 363
Object Editing Shortcuts ... 364
Scene Components Panel Shortcuts ... 365
Selection Shortcuts ... 366
Smoothing Menu Shortcuts ... 367
Views Menu Shortcuts ... 368

Hints and Tips 369

2D Images ... 369
Exploded Animations ... 369
Processing Large Files ... 370
Rotating Objects ... 371
Reducing Models ... 372

Uninstalling Deep Exploration 373

Appendix A: 2D File Formats 374

Adobe Encapsulated Postscript Export (.eps) ... 376
Adobe Illustrator Vector Graphic (.ai) ... 377
Adobe Illustrator Vector Graphic Export (.ai) ... 378
Adobe Photoshop Document (.psd) ... 379
Adobe Portable Document 3D Export (.pdf) ... 380

Autodesk Animator Graphic (.cel) ... 383
DirectX DirectDraw Surface (.dds) ... 384
EA/Amiga Interchange File Format (.iff) ... 385
Flexible Precision Buffer Map (.flx) ... 386
FLIC Animator Animation (.flc) ... 387
FLIC Animator Animation (.fli) ... 388
Graphics Interchange Format (.gif) ... 389
JPEG 2000 J2K (.j2k) ... 390
JPEG 2000 JP2 (.jp2) ... 391
JPEG 2000 JP2 Export (.jp2) ... 392
JPEG 2000 JPC (.jpc) ... 393
JPEG 2000 JPC Export (.jpc) ... 394
JPEG 2000 JPX (.jpx) ... 395
JPEG Image (.jpeg, .jpg) ... 396
JPEG Image Export (.jpeg, .jpg) ... 397
Maya Interchange File Format (.iff) ... 398
Maya Interchange File Format Export (.iff) ... 399
OpenEXR Bitmap (.exr) ... 400
OpenEXR Bitmap Export (.exr) ... 401
Portable Network Graphics (.png) ... 402
Portable Network Graphics Export (.png) ... 403
Portable Pixelmap Graphic (.ppm) ... 404
Publisher's Paintbrush Bitmap Graphic (.pcx) ... 405
Radiance Picture Format (.hdr) ... 406
Scalable Vector Graphics (.svg) ... 407
Scalable Vector Graphics Export (.svg) ... 408
Silicon Graphics Image (.rgb, .rgba, .int, .inta) ... 409
Shockwave Flask Object Export (.swf) ... 410
SOFTIMAGE Picture (.pic) ... 411
Tagged Image File Format (.tif, .tiff) ... 412
Tagged Image File Format Export (.tif, .tiff) ... 413
TGA File (.tga) ... 414
TGA File Export (.tga) ... 415
Windows Bitmap Graphic Export (.bmp, .dib) ... 416
Windows Cursor File (.cur) ... 417
Windows Icon File (.ico) ... 418
Windows Run Length Encoded Bitmap (.rle) ... 419

Appendix B: 3D File Formats 420

AOFF File Format (.geo) ... 422
AOFF File Format Export (.geo) ... 423
Autodesk 3D Studio ASCII (.asc) ... 424
Autodesk 3D Studio ASCII Export (.asc) ... 425
Autodesk 3D Studio Export (.3ds) ... 426
Autodesk 3D Studio Import (.3ds) ... 427
Autodesk 3D Studio Max ASCII (.ase) ... 428
Autodesk 3D Studio Project Import (.prj) ... 429
Caligari trueSpace Object Export (.cob) ... 430
Caligari trueSpace Object Import (.cob) ... 431
Caligari trueSpace Scene Import (.scn) ... 432
CINEMA 4D (.c4d) ... 433
DirectX Model Export (.x) ... 434
DirectX Model Import (.x) ... 435
HTML Document with 3D (.html) ... 436
Imagine Geometry (.iob) ... 437
ISO G Code Format (.iso, .nc) ... 438
LightWave 3D Binary and Object Export (.lwo, .lw) ... 439
LightWave 3D Binary and Object Import (.lwo, lw) ... 440
LightWave Scene Export (.lws) ... 441
LightWave Scene Import (.lws) ... 442

Max File Export (.max) ... 443
Max File Import (.max) ... 444
Maya ASCII Scene Export (.ma) ... 446
Maya ASCII Scene Import (.ma) ... 447
Maya Binary Scene Export (.mb) ... 448
Maya Binary Scene Import (.mb) ... 449
Nendo Files (.ndo) ... 450
NGRAIN Import (.ngn, .ngw) ... 451
Object File Format Vector Graphics (.off) ... 452
Object File Format Vector Graphics Export (.off) ... 453
Open Inventor File Export (.iv) ... 454
Open Inventor File Import (.iv) ... 455
OpenFlight Scene Description Database (.flt) ... 456
OpenFlight Scene Description Database Export (.flt) ... 457
OpenGL CPP Code Export (.cpp) ... 458
Points File (.pts) ... 460
Polygon File Format (.ply) ... 461
Portable Graymap Graphics File Import (.pgm) ... 462
POV-Ray RAW Triangle (.raw) ... 463
POV-Ray RAW Triangle Export (.raw) ... 464
Power Render Object (.pro) ... 465
Protein Data Bank Import (.pdb) ... 466
Quake Character Model I (.mdl) ... 469
Quake Character Model II (.md2) ... 470
Quake Character Model III (.md3) ... 471
Quake Map File (.map) ... 472
Quicktime 3D Metafile (.3dm, .3dmf) ... 473
RAX Extended RAW Triangles (.rax) ... 474
Rhinoceros 3D Model Export (.3dm) ... 475
Rhinoceros 3D Model Import (.3dm) ... 476
Right Hemisphere Binary (.rh) ... 477
Right Hemisphere Binary Export (.rh) ... 478
Shockwave 3D File Export (.w3d) ... 480
Shockwave Web Page Export (.html) ... 481
SOFTIMAGE|XSI Export (.xsi) ... 482
SOFTIMAGE|XSI (.xsi) ... 484
Universal 3D Export (.u3d) ... 485
Universal 3D Import (.u3d) ... 486
Unreal Character File (.psk) ... 487
VRML Worlds Export (.wrl, .vrml) ... 488
VRML Worlds Import (.wrl, .vrml) ... 489
Wavefront Object Export (.obj) ... 491
Wavefront Object Import (.obj) ... 493

Appendix C: Audio File Formats 494

Audio Interchange Format (.aif, .aiff) ... 495
MPEG Audio File Format (.mpa, .mp2, .mp3) ... 496
Musical Instrument Digital Interface (.mid, .midi) ... 497
RIFF MIDI File (.rmi) ... 498
Sound Format (.snd) ... 499
Sun/NeXT/DEC Audio (.au) ... 500
Waveform Audio (.wav) ... 501

Appendix D: Video File Formats 502

Advanced Streaming Format (.asf) ... 503
Audio Video Interleave Animation (.avi) ... 504
Audio Video Interleave Animation Export (.avi) ... 505
Moving Pictures Expert Group Video Format (.m1v, .mpeg, .mpg) ... 506

Appendix E: Motion Capture File Formats 507

BioVision Hierarchical Data and Character Studio Sub-Format Export (.bvh) ... 508
BioVision Hierarchical Data and Character Studio Sub-Format Import (.bvh) ... 510
Character Studio Export (.csm) ... 511
Character Studio Import (.csm) ... 512
Coordinate 3D Import (.c3d) ... 513
Hierarchical Translations and Rotations Import (.htr) ... 514
Tracked Row Binary Import (.trb) ... 515
Tracked Row Character Export (.trc) ... 516
Tracked Row Character Import (.trc) ... 517

Appendix F: Material File Formats 518

Autodesk 3D Studio Material (.mli) ... 519
Right Hemisphere Material (.rhm) ... 520
Right Hemisphere Material Export (.rhm) ... 521
Wavefront Material (.mtl) ... 522

Appendix G: Shader File Formats 523

Real-Time Shader (.fx) ... 524
Right Hemipshere Shader (.rhs) ... 525

Appendix H: CAD File Formats 526

AutoCAD Drawing Interchange Export (.dxf) ... 528
AutoCAD Drawing Interchange Import (.dxf) ... 529
AutoCAD Drawing Object Import (.dwg) ... 530
Autodesk Inventor Assembly Import (.iam) ... 532
Autodesk Inventor Part Import (.ipt) ... 534
CADKEY Advanced Design Language Import (.cdl) ... 536
CATIA Import (.cgr, .dlv, .model) ... 537
CATIA5 Assembly and Part Import (.catpart, .catproduct) ... 542
Computer Graphics Metafile Export (.cgm) ... 547
Computer Graphics Metafile Import (.cgm) ... 548
Granite File Import (.g) ... 549
Hewlett-Packard Graphics Library Import (.plt) ... 552
IGES Format Import (.iges, .igs) ... 553
IronCAD 3D CAD Import (.ics) ... 559
JT File Import (.jt) ... 561
Lattice XVL Structure and Geometry Import (.xv0, .xv3) ... 566
MicroStation CAD Graphic Import (.dgn) ... 569
Neutral Part File Import (.neu) ... 571
Parasolid CAD File Import (.x_b, .x_t, .xmt, .xmt_txt) ... 576
Pro/ENGINEER Assembly Import (.asm) ... 582
Pro/ENGINEER Part Import (.prt*, .xpr) ... 588
PTC Pro/DESKTOP Import (.des) ... 593
Raindrop Geomagic 3D Modelling Import (.wrp) ... 595
SDRC I-DEAS Model Import (.arc, .mf1) ... 597
SDRC I-DEAS Package Import (.pkg) ... 599
SDRC I-DEAS Universal Import (.unv) ... 601
SolidEdge 3D CAD Model Part Import (.par) ... 603
SolidWorks Assembly and Part Import (.sldasm, .sldlfp, .sldprt) ... 605
Standard ACIS Text Import (.sat) ... 607
STEP Files Import (.step, .stp) ... 612
Stereolithography File (.stl) ... 617
Stereolithography Rapid Prototyping Data Export (.stl) ... 618
Unigraphics Parts and Assemblies Import (.prt) ... 619
VDA File Import (.vda) ... 624
Wavefront Studio Wireframe Import (.wire) ... 627
Windows Metafile (.wmf) ... 629

Appendix I: Miscellaneous File Formats 630

Text File (.txt) ... 631

WinRAR Compressed Archive (.rar) 632
ZIP Archive (.zip) 633

Index **635**

Introduction

Welcome to Right Hemisphere's Deep Exploration CAD Edition and Standard Edition User Reference.

Deep Exploration is a standalone application used to manage and author 2D, 3D, animation, video, and audio assets residing on a computer or network. With it, you can search, view and manage all your assets in one program, repurpose 3D assets for use in Web pages, training, sales presentations and marketing, and create interactive 3D content for Web-based presentations.

This reference contains detailed information about all the features and capabilities of Deep Exploration and the Deep Exploration modules, and is organized mainly by functional areas. The User Interface (on page 198) section gives you a guide to program controls and where to find them.

If you have already used previous versions of this program, you might want to start here: Deep Exploration Overview (on page 37).

If you are new to this software, this would be a good place to start: Getting Started with Deep Exploration (on page 39).

You can find a guide to using the online reference here: Using the Reference Online (on page 26), and below is a list of important introductory topics.

- Creating New Scenes (on page 41).
- Opening Files (on page 42).
- Importing Files (on page 43).
- Searching for Files (on page 50).
- Merging Files (on page 54).
- Reloading Files (on page 55).
- Saving Files (on page 56).
- Viewing Scenes (on page 61).
- Objects and Materials (on page 84).
- Animation (on page 101).
- Benchmarking a File (on page 107).
- CADTools (on page 109).
- Callouts (on page 126).
- Illustration Tools (on page 134).
- Layers (on page 139).
- Markups (on page 141).
- Measurements (on page 145).
- High Dynamic Range Images (on page 149).
- Plugin Manager (on page 153).
- Primitives and Modifiers (on page 155).
- Publishing Web Pages (on page 156).
- Realight Tool (on page 157).
- Slide Shows (on page 160).
- Shaders (on page 161).
- Steps (on page 164).
- Teamwork Tools (on page 167).
- UV Mapping (on page 172).

- Gateway Module (on page 174).
- PDF Publishing Module (on page 188).
- PMI Module (on page 194).
- Closing the Application (on page 197).

Copyright and Trademarks

Copyright © 1999-2006 Right Hemisphere.
All rights reserved.

This software and any accompanying documentation contain the proprietary information of Right Hemisphere and its licensors. This software and documentation are provided under a license agreement containing restrictions on their use, disclosure, reproduction, transmission and distribution, and are protected by copyright law. As stated in the license agreement, reverse engineering of the software is prohibited.

Due to continued product development, the information contained in the documentation may change. Right Hemisphere does not warrant the documentation to be error-free. If you find any errors in or other problems with the documentation, please report them to Right Hemisphere in writing.

The product and company names appearing in this software and documentation may be trademarks or registered trademarks of Right Hemisphere and third parties.

- Portions of this software are based in part on OpenEXR. (c) 2002, Industrial Light & Magic, a division of Lucas Digital Ltd. LLC. All rights reserved.
- Portions of this software are based in part on the JasPer Software. (c) 1999-2000, Image Power, Inc. and the University of British Columbia. (c) 2001 Michael David Adams. All rights reserved.
- Portions of this software are based in part on the NVIDIA CG Shader Library. (c) 2002 NVIDIA Corporation. All rights reserved.
- Portions of this software are based in part on the TIFF Library. (c) 1988-1997 Sam Leffler. (c) 1991-1997 Silicon Graphics, Inc.
- Portions of this software are based in part on PKWARE. (c) 1991, 1992, 1994 and 1995 PKWARE Inc. All rights reserved.
- Portions of this software are based in part on TTF Foundations. (c) 1996-2005 Trade and Technologies France. All rights reserved.
- Portions of this software are based in part on the Autodesk DWF Toolkit. (c) 1996-2005 Autodesk, Inc. All rights reserved.

Right Hemisphere.

support@righthemisphere.com (mailto:support@righthemisphere.com)
http://www.righthemisphere.com (http://www.righthemisphere.com)

The following notices are provided as required by certain of Right Hemisphere's agreements with its licensors. They do not govern the use, disclosure, reproduction, transmission or distribution of this software as a whole. For information concerning the license to this software as a whole, see the end user or functionally similar license agreement provided by Right Hemisphere in conjunction with this software.

OpenEXR License

Copyright (c) 2002, Industrial Light & Magic, a division of Lucas Digital Ltd. LLC.

All rights reserved.

Redistribution and use in source and binary forms, with or without modification, are permitted provided that the following conditions are met:

- Redistributions of source code must retain the above copyright notice, this list of conditions and the following disclaimer.
- Redistributions in binary form must reproduce the above copyright notice, this list of conditions and the following disclaimer in the documentation and/or other materials provided with the distribution.

Copyright © Right Hemisphere 2006. All Rights Reserved.

- Neither the name of Industrial Light & Magic nor the names of its contributors may be used to endorse or promote products derived from this software without specific prior written permission.

THIS SOFTWARE IS PROVIDED BY THE COPYRIGHT HOLDERS AND CONTRIBUTORS "AS IS" AND ANY EXPRESS OR IMPLIED WARRANTIES, INCLUDING, BUT NOT LIMITED TO, THE IMPLIED WARRANTIES OF MERCHANTABILITY AND FITNESS FOR A PARTICULAR PURPOSE ARE DISCLAIMED. IN NO EVENT SHALL THE COPYRIGHT OWNER OR CONTRIBUTORS BE LIABLE FOR ANY DIRECT, INDIRECT, INCIDENTAL, SPECIAL, EXEMPLARY, OR CONSEQUENTIAL DAMAGES (INCLUDING, BUT NOT LIMITED TO, PROCUREMENT OF SUBSTITUTE GOODS OR SERVICES; LOSS OF USE, DATA, OR PROFITS; OR BUSINESS INTERRUPTION) HOWEVER CAUSED AND ON ANY THEORY OF LIABILITY, WHETHER IN CONTRACT, STRICT LIABILITY, OR TORT (INCLUDING NEGLIGENCE OR OTHERWISE) ARISING IN ANY WAY OUT OF THE USE OF THIS SOFTWARE, EVEN IF ADVISED OF THE POSSIBILITY OF SUCH DAMAGE.

JasPer Software License

Copyright (c) 1999-2000, Image Power, Inc. and the University of British Columbia.

Copyright (c) 2001 Michael David Adams.

All rights reserved.

IMAGE POWER JPEG-2000 PUBLIC LICENSE

GRANT

Permission is hereby granted, free of charge, to any person (the "User") obtaining a copy of this software and associated documentation, to deal in the JasPer Software without restriction, including without limitation the right to use, copy, modify, merge, publish, distribute, sublicense, and/or sell copies of the JasPer Software (in source and binary forms), and to permit persons to whom the JasPer Software is furnished to do so, provided further that the License Conditions below are met.

License Conditions

A. Redistributions of source code must retain the above copyright notice, and this list of conditions, and the following disclaimer.

B. Redistributions in binary form must reproduce the above copyright notice, and this list of conditions, and the following disclaimer in the documentation and/or other materials provided with the distribution.

C. Neither the name of Image Power, Inc. nor any other contributor (including, but not limited to, the University of British Columbia and Michael David Adams) may be used to endorse or promote products derived from this software without specific prior written permission.

D. User agrees that it shall not commence any action against Image Power, Inc., the University of British Columbia, Michael David Adams, or any other contributors (collectively "Licensors") for infringement of any intellectual property rights ("IPR") held by the User in respect of any technology that User owns or has a right to license or sublicense and which is an element required in order to claim compliance with ISO/IEC 15444-1 (i.e., JPEG-2000 Part 1). "IPR" means all intellectual property rights worldwide arising under statutory or common law, and whether or not perfected, including, without limitation, all (i) patents and patent applications owned or licensable by User; (ii) rights associated with works of authorship including copyrights, copyright applications, copyright registrations, mask work rights, mask work applications, mask work registrations; (iii) rights relating to the protection of trade secrets and confidential information; (iv) any right analogous to those set forth in subsections (i), (ii), or (iii) and any other proprietary rights relating to intangible property (other than trademark, trade dress, or service mark rights); and (v) divisions, continuations, renewals, reissues and extensions of the foregoing (as and to the extent applicable) now existing, hereafter filed, issued or acquired.

E. If User commences an infringement action against any Licensor(s) then such Licensor(s) shall have the right to terminate User's license and all sublicenses that have been granted hereunder by User to other parties.

F. This software is for use only in hardware or software products that are compliant with ISO/IEC 15444-1 (i.e., JPEG-2000 Part 1). No license or right to this Software is granted for products that do not comply with ISO/IEC 15444-1. The JPEG-2000 Part 1 standard can be purchased from the ISO.

THIS DISCLAIMER OF WARRANTY CONSTITUTES AN ESSENTIAL PART OF THIS LICENSE. NO USE OF THE JASPER SOFTWARE IS AUTHORIZED HEREUNDER EXCEPT UNDER THIS DISCLAIMER. THE JASPER SOFTWARE IS PROVIDED BY THE LICENSORS AND CONTRIBUTORS UNDER THIS LICENSE ON AN ``AS-IS'' BASIS, WITHOUT WARRANTY OF ANY KIND, EITHER EXPRESSED OR IMPLIED, INCLUDING, WITHOUT LIMITATION, WARRANTIES THAT THE JASPER SOFTWARE IS FREE OF DEFECTS, IS MERCHANTABLE, IS FIT FOR A PARTICULAR PURPOSE OR IS NON-INFRINGING. THOSE INTENDING TO USE THE JASPER SOFTWARE OR MODIFICATIONS THEREOF FOR USE IN HARDWARE OR SOFTWARE PRODUCTS ARE ADVISED THAT THEIR USE MAY INFRINGE EXISTING PATENTS, COPYRIGHTS, TRADEMARKS, OR OTHER INTELLECTUAL PROPERTY RIGHTS. THE ENTIRE RISK AS TO THE QUALITY AND PERFORMANCE OF THE JASPER SOFTWARE IS WITH THE USER. SHOULD ANY PART OF THE JASPER SOFTWARE PROVE DEFECTIVE IN ANY RESPECT, THE USER (AND NOT THE INITIAL DEVELOPERS, THE UNIVERSITY OF BRITISH COLUMBIA, IMAGE POWER, INC., MICHAEL DAVID ADAMS, OR ANY OTHER CONTRIBUTOR) SHALL ASSUME THE COST OF ANY NECESSARY SERVICING, REPAIR OR CORRECTION. UNDER NO CIRCUMSTANCES AND UNDER NO LEGAL THEORY, WHETHER TORT (INCLUDING NEGLIGENCE), CONTRACT, OR OTHERWISE, SHALL THE INITIAL DEVELOPER, THE UNIVERSITY OF BRITISH COLUMBIA, IMAGE POWER, INC., MICHAEL DAVID ADAMS, ANY OTHER CONTRIBUTOR, OR ANY DISTRIBUTOR OF THE JASPER SOFTWARE, OR ANY SUPPLIER OF ANY OF SUCH PARTIES, BE LIABLE TO THE USER OR ANY OTHER PERSON FOR ANY INDIRECT, SPECIAL, INCIDENTAL, OR CONSEQUENTIAL DAMAGES OF ANY CHARACTER INCLUDING, WITHOUT LIMITATION, DAMAGES FOR LOSS OF GOODWILL, WORK STOPPAGE, COMPUTER FAILURE OR MALFUNCTION, OR ANY AND ALL OTHER COMMERCIAL DAMAGES OR LOSSES, EVEN IF SUCH PARTY HAD BEEN INFORMED, OR OUGHT TO HAVE KNOWN, OF THE POSSIBILITY OF SUCH DAMAGES. THE JASPER SOFTWARE AND UNDERLYING TECHNOLOGY ARE NOT FAULT-TOLERANT AND ARE NOT DESIGNED, MANUFACTURED OR INTENDED FOR USE OR RESALE AS ON-LINE CONTROL EQUIPMENT IN HAZARDOUS ENVIRONMENTS REQUIRING FAIL-SAFE PERFORMANCE, SUCH AS IN THE OPERATION OF NUCLEAR FACILITIES, AIRCRAFT NAVIGATION OR COMMUNICATION SYSTEMS, AIR TRAFFIC CONTROL, DIRECT LIFE SUPPORT MACHINES, OR WEAPONS SYSTEMS, IN WHICH THE FAILURE OF THE JASPER SOFTWARE OR UNDERLYING TECHNOLOGY OR PRODUCT COULD LEAD DIRECTLY TO DEATH, PERSONAL INJURY, OR SEVERE PHYSICAL OR ENVIRONMENTAL DAMAGE ("HIGH RISK ACTIVITIES"). LICENSOR SPECIFICALLY DISCLAIMS ANY EXPRESS OR IMPLIED WARRANTY OF FITNESS FOR HIGH RISK ACTIVITIES. USER WILL NOT KNOWINGLY USE, DISTRIBUTE OR RESELL THE JASPER SOFTWARE OR UNDERLYING TECHNOLOGY OR PRODUCTS FOR HIGH RISK ACTIVITIES AND WILL ENSURE THAT ITS CUSTOMERS AND END-USERS OF ITS PRODUCTS ARE PROVIDED WITH A COPY OF THE NOTICE SPECIFIED IN THIS SECTION.

NVIDIA CG Shader Library License

Copyright (c) 2002, NVIDIA Corporation.

All rights reserved.

NVIDIA Corporation("NVIDIA") supplies this software to you in consideration of your agreement to the following terms, and your use, installation, modification or redistribution of this NVIDIA software constitutes acceptance of these terms. If you do not agree with these terms, please do not use, install, modify or redistribute this NVIDIA software.

Copyright © Right Hemisphere 2006. All Rights Reserved.

In consideration of your agreement to abide by the following terms, and subject to these terms, NVIDIA grants you a personal, non-exclusive license, under NVIDIA's copyrights in this original NVIDIA software (the "NVIDIA Software"), to use, reproduce, modify and redistribute the NVIDIA Software, with or without modifications, in source and/or binary forms; provided that if you redistribute the NVIDIA Software, you must retain the copyright notice of NVIDIA, this notice and the following text and disclaimers in all such redistributions of the NVIDIA Software. Neither the name, trademarks, service marks nor logos of NVIDIA Corporation may be used to endorse or promote products derived from the NVIDIA Software without specific prior written permission from NVIDIA. Except as expressly stated in this notice, no other rights or licenses express or implied, are granted by NVIDIA herein, including but not limited to any patent rights that may be infringed by your derivative works or by other works in which the NVIDIA Software may be incorporated. No hardware is licensed hereunder.

THE NVIDIA SOFTWARE IS BEING PROVIDED ON AN "AS IS" BASIS, WITHOUT WARRANTIES OR CONDITIONS OF ANY KIND, EITHER EXPRESS OR IMPLIED, INCLUDING WITHOUT LIMITATION, WARRANTIES OR CONDITIONS OF TITLE, NON-INFRINGEMENT, MERCHANTABILITY, FITNESS FOR A PARTICULAR PURPOSE, OR ITS USE AND OPERATION EITHER ALONE OR IN COMBINATION WITH OTHER PRODUCTS.

IN NO EVENT SHALL NVIDIA BE LIABLE FOR ANY SPECIAL, INDIRECT, INCIDENTAL, EXEMPLARY, CONSEQUENTIAL DAMAGES (INCLUDING, BUT NOT LIMITED TO, LOST PROFITS; PROCUREMENT OF SUBSTITUTE GOODS OR SERVICES; LOSS OF USE, DATA, OR PROFITS; OR BUSINESS INTERRUPTION) OR ARISING IN ANY WAY OUT OF THE USE, REPRODUCTION, MODIFICATION AND/OR DISTRIBUTION OF THE NVIDIA SOFTWARE, HOWEVER CAUSED AND WHETHER UNDER THEORY OF CONTRACT, TORT (INCLUDING NEGLIGENCE), STRICT LIABILITY OR OTHERWISE, EVEN IF NVIDIA HAS BEEN ADVISED OF THE POSSIBILITY OF SUCH DAMAGE.

TIFF License

Copyright (c) 1988-1997 Sam Leffler.

Copyright (c) 1991-1997 Silicon Graphics, Inc.

All rights reserved.

Permission to use, copy, modify, distribute, and sell this software and its documentation for any purpose is hereby granted without fee, provided that (i) the above copyright notices and this permission notice appear in all copies of the software and related documentation, and (ii) the names of Sam Leffler and Silicon Graphics may not be used in any advertising or publicity relating to the software without the specific, prior written permission of Sam Leffler and Silicon Graphics.

THE SOFTWARE IS PROVIDED "AS-IS" AND WITHOUT WARRANTY OF ANY KIND, EXPRESS, IMPLIED OR OTHERWISE, INCLUDING WITHOUT LIMITATION, ANY WARRANTY OF MERCHANTABILITY OR FITNESS FOR A PARTICULAR PURPOSE.

IN NO EVENT SHALL SAM LEFFLER OR SILICON GRAPHICS BE LIABLE FOR ANY SPECIAL, INCIDENTAL, INDIRECT OR CONSEQUENTIAL DAMAGES OF ANY KIND, OR ANY DAMAGES WHATSOEVER RESULTING FROM LOSS OF USE, DATA OR PROFITS, WHETHER OR NOT ADVISED OF THE POSSIBILITY OF DAMAGE, AND ON ANY THEORY OF LIABILITY, ARISING OUT OF OR IN CONNECTION WITH THE USE OR PERFORMANCE OF THIS SOFTWARE.

Autodesk DWF Toolkit Disclaimer of Warranty

(c) 1996-2005 Autodesk, Inc.

All rights reserved.

The incorporated portions of the Autodesk DWF Toolkit are provided "AS IS" and without any warranty of any kind. AUTODESK DOES NOT MAKE AND HEREBY DISCLAIMS ANY EXPRESS OR IMPLIED WARRANTIES INCLUDING, BUT NOT LIMITED TO, THE WARRANTIES OF NON-INFRINGEMENT, MERCHANTABILITY OR FITNESS FOR A PARTICULAR PURPOSE, OR ARISING FROM A COURSE OF DEALING, USAGE, OR TRADE PRACTICE.

System Requirements

You must have the following software and hardware installed on the computer for Deep Exploration to function correctly.

Minimum

- Windows 2000 SP4 operating system.
- Pentium III 266 processor or higher.
- 128MB of RAM (more for large model and texture sizes).
- Microsoft DirectX, version 8.
- Internet Explorer 6.0.
- Graphics card capable of displaying 24-bit color.
- Pixel and vertex shader support on graphics card.
- Shaders located in the Shaders folder.
- 3D hardware accelerator video card.

Recommended

- Windows XP operating system.
- Pentium III 733 processor or higher.
- 256MB of RAM (more for large model and texture sizes).
- Microsoft DirectX, version 9.
- 3D hardware accelerator video card with 128MB of RAM.

Additional

- An Internet connection is required for 3D Web searches and Cortex updates.
- To view and save 3ds max files, a copy of 3ds max must be installed.
- To view and save Maya, files a copy of Maya must be installed.
- To load the ngrainview.x3d plugin, .NET must be installed.
- To view 3D content (on page 156) in a HTML Document with 3D (.html) file:
  - Deep Publish (http://www.righthemisphere.com/deeppublish) or Deep View (http://www.righthemisphere.com/deepview) must be installed.
  - The .rh file type must be added to the Microsoft Windows Server 2003 recognize file type set.
- To view 3D content (on page 156) in a Shockwave Web Page (.html) file, Shockwave Player must be installed.

PDF Publishing Module

The PDF Publishing Module is required to publish to PDF documents. This module requires the following:

- Deep Exploration CAD or Standard Edition.
- Microsoft DirectX, version 8.1 or higher.
- Adobe Reader 7.07 (required to 'read' .pdf files).
- The Designer Objects Module is required to create new, and edit existing templates in Adobe Designer.
- Adobe Acrobat 3D is required to install the Designer Objects Module.

Copyright © Right Hemisphere 2006. All Rights Reserved.

- The PMI Module is required to view PMI data.
  - The JT Module is required to be able to read PMI data in JT files.

PMI Module

The PMI Module is required to view PMI data. This module requires the following:

- Deep Exploration CAD Edition.
- Microsoft DirectX, version 8.1 or higher.
- The PDF Publishing Module is required to publish PMI data to PDF documents.
- The JT Module is required to be able to read PMI data in JT files.

Modules

Various modules are available for industry specific translation, authoring and publishing:

- Certain modules are available to enhance the functionality of Deep Exploration CAD and Standard Editions. For example, the Gateway and PDF Publishing modules.
- Certain modules are available to enhance the functionality of Deep Exploration CAD Edition. For example, the PMI Module.
- Certain modules are available to enhance the Standard Edition functionality. For example, the CADTools and Illustration modules.
- Certain modules are available for CAD file support for the Standard Edition.

Note 1: Deep Exploration is sold in two forms: the CAD Edition and the Standard Edition. The CAD Edition supports opening and importing all supported CAD file types (on page 526). To obtain CAD file support, you can either purchase (on page 36) Deep Exploration CAD Edition, or purchase the individual CAD modules to use with the Deep Exploration Standard Edition.

Note 2: When importing files (on page 43), the available import options depend on the form of Deep Exploration you have installed; the CAD Edition or the Standard Edition with the various modules.

Additional Modules: CAD and Standard Editions

Gateway Module (on page **Error! Bookmark not defined.**): Enables you to quickly and easily browse for assets and derivatives within Deep Server databases.

PDF Publishing Module (on page 188)**:** Enables you to open, view, and save PDF documents containing 3D content.

Additional Modules: CAD Edition

PMI Module (on page 194)**:** Enables you to extract and display all the Product Manufacturing Information (PMI), and any metadata associated with CATIA 5 and JT files.

Additional Modules: Standard Edition

CADTools Module (on page 109): A set of tools that provide functionality to optimize 3D objects for display and manipulation. Realight (on page 157) and UV Mapping (on page 172) functionality is also delivered with this module.

Illustration Module (on page 134): Used to render technical illustrations direct from almost any 3D model, providing high quality line-art and shaded technical illustrations.

CAD Modules: Standard Edition

CATIA Module (on page 526): Allows you to view, import, and apply settings to your CATIA supported file formats, and then save them to supported 2D and 3D file formats.

CATIA5 Module (on page 526): Allows you to view, import, and apply settings to your CATIA5 supported file formats, and then save them to supported 2D and 3D file formats.

CoreCAD Module (on page 526): Enables you to view, import, and apply settings to your CoreCAD supported file formats, and then save them to supported 2D and 3D file formats.

JT Module (on page 526): Allows you to view, import, and apply settings to your JT supported file formats, and then save them to supported 2D and 3D file formats.

Pro/E Module (on page 526): Used for viewing, importing, and applying settings to your Pro/E supported file formats, and publishing them to supported 2D and 3D file formats. Support for additional formats is available when you purchase the Pro/E module.

Copyright © Right Hemisphere 2006. All Rights Reserved.

SDRC I-DEAS Module (on page 526): Enables you to view, import, and apply settings to your SDRC I-DEAS supported file formats, and then save them to supported 2D and 3D file formats.

Unigraphics Module (on page 526): Enables you to view, import, and apply settings to your Unigraphics supported file formats, and then save them to supported 2D and 3D file formats.

XVL Module (on page 526): Enables you to view, import, and apply settings to your XVL supported file formats, and then save them to supported 2D and 3D file formats.

Installation

Deep Exploration can be installed directly from the CD-ROM, or it can be downloaded and installed from the Right Hemisphere Web site. After installation, you can install any purchased modules.

You must have administrator privileges to install this software.

Once the installation is complete, registration and activation (on page 19) should be completed before using the program. You can also choose to begin using the program without registration or activation, in which case the 30-day trial period (on page 18) begins. When the trial period expires, you must register and activate the program to continue to use it.

Gateway

If you are re-installing or upgrading the Gateway Module (on page **Error! Bookmark not defined.**), you must first uninstall Gateway and remove all files and folders from its directory location before proceeding.

PDF Publishing Module

When you install the PDF Publishing Module (on page 188), you can select to install only the module or both the module and the Designer Objects Module to your computer. The Designer Objects Module installs various Right Hemisphere objects to Adobe Designer. These objects are used to create and edit templates using the PDF Publishing Module.

Please note that the Designer Objects Module is only installed if you have Adobe Designer installed on your computer.

PMI Module

The PMI Module (on page 194) is a plugin for Deep Exploration CAD Edition and is used to extract and display all the PMI data and any associated metadata from within CATIA 5 and JT files. When you install the PMI Module, you can select to install only the module or both the module and the JT Module to your computer. You must install the JT Module to be able to read JT files with PMI data.

Procedures

To install Deep Exploration from the CD-ROM:

1. Insert the CD-ROM into the CD-ROM drive.
2. Use Windows Explorer to locate the Setup.exe file.
3. Double-click the Setup.exe file to start the installation.
4. Follow the instructions as they appear on your screen.

You can now register and activate Deep Exploration.

To install the modules from the CD-ROM:

1. Insert the CD-ROM into the CD-ROM drive.
2. Use Windows Explorer to locate the Setup.exe file for the module you want to install.
3. Double-click the Setup.exe file to start the installation.
4. Follow the instructions as they appear on your screen.

You can now register and activate the module.

Copyright © Right Hemisphere 2006. All Rights Reserved.

Trial Period

Deep Exploration is sold in two forms: the CAD Edition and the Standard Edition. After installation of either product, a 30-day trial period begins during which full functionality is available including:

- Opening standard and CAD supported file types.
- Saving to standard and CAD supported file types.

Note: Please see the appendices for further information on supported file types.

- Full CADTools (on page 109), Illustration (on page 134), Realight (on page 157), and UV Mapping (on page 172) functionality.
- Gateway Module (on page **Error! Bookmark not defined.**) functionality.
- Full error reporting.

At any time during this trial period, you can register and activate the product license, or you can wait until the trial period is complete. Both your Serial Number/Order ID and Product Authorization Code (on page 19) establish the license type.

Standard and CAD Editions

The Standard Edition supports all functionality excluding:

- Opening and importing all supported CAD file types.
- Saving to supported CAD file types.
- CADTools, Illustration, Realight, and UV Mapping functionality.
- PDF Publishing Module and PMI Module functionality.

To obtain the above functionality, you should purchase Deep Exploration CAD Edition (on page 36).

Note: You can also obtain the above functionally for the Standard Edition by purchasing individual modules (on page 15).

Trial Period Expiry

Please note that when the trial period expires:

- 3D models are view only; all exporting capabilities are disabled including rendering to file, raytrace rendering, and batch conversion.
- CAD file load functionality is disabled.
- The CADTools and Illustration toolbars are disabled in Deep Exploration CAD Edition.

You must complete registration and activation (on page 19) to license and regain full use of the product.

Registration and Activation

After installation, the product and any purchased modules should be registered. After registration, the product licenses must then be activated.

Registered users receive information about the latest version of Deep Exploration via e-mail. Any problems that might arise are given the highest priority by our technical team.

Registered users also receive a user name and password with which to access the Registered User area of the Right Hemisphere Web site. This page contains product updates, the latest plugin files and patch downloads.

If you require assistance with registration or activation, please contact us using our support form (http://www.righthemisphere.com/support/contact_support.php3).

Note: If you have purchased multiple copies/licenses of a product, you must repeat registration and activation for each product Serial Number/Order ID you own.

Product Registration

Before registering your product or any purchased modules, ensure you have an active Internet connection. If not, you can register the product offline.

Procedures

To register the application or a module online:

1. Go to the Right Hemisphere registration page (http://www.righthemisphere.com/support/register/).
2. Click **Register**.
3. Select the product you want to register.
4. Enter the Serial Number/Order ID, as sent to you with your product purchase, in the Serial Number/Order ID field and click **Next**.
5. Enter the required information in the appropriate fields ensuring all mandatory fields (*) are complete.
6. Click **Next**.

Registration is now complete. If you are registering an application, a Product Authorization Code, user name and password are sent to you via email, and you can now activate the product license. If you are registering a module, you are sent a user name and password via email.

To register the application or a module offline:

Contact support using our support form (http://www.righthemisphere.com/support/contact_support.php3).

Copyright © Right Hemisphere 2006. All Rights Reserved.

License Activation

After product registration, you must activate the product license.

Procedure

To activate the application or a module:

1. Click the Windows **Start** button, choose **Programs > Right Hemisphere > Deep Exploration** then click **Deep Exploration**.
2. Do one of the following:
   - If you are activating Deep Exploration, choose **Help > Activate Deep Exploration** on the menu bar.
   - If you are activating a module, choose **Help > Activate Modules** on the menu bar.
3. Enter your Serial Number/Order ID and Authorization Code in the appropriate fields.
4. Do one of the following:
   - Click **Current user only** to make the application available only to the user activating the product.
   - Click **All users** to make the application available to all users on this computer.

   Note: Administrator rights are required to complete this option.
5. Click **Activate** and restart Deep Exploration.

Activation is now complete.

Assumptions

Certain assumptions have been made regarding the use of the product:

- You should be familiar in the use of the Microsoft Windows interface.
- You should be familiar with 3D concepts.
- You should be familiar in the use of your 2D painting applications if you want to use any 2D application plugins. For example, Adobe Photoshop.

  Note: This is for users of 2D software applications only.

- You should be familiar in the use of your 3D modelling applications if you want to use any 3D application plugins. For example, 3ds max or Maya.

  Note: This is for users of 3D software applications only.

- You should be familiar in the use of FrameMaker, Excel, PowerPoint, and Word if you want to use these applications with Deep Publish (http://www.righthemisphere.com/deeppublish) or Deep View (http://www.righthemisphere.com/deepview).

Copyright © Right Hemisphere 2006. All Rights Reserved.

Conventions

Several user interface controls are utilized within the application, similar to the functionality in most Windows applications. These controls are graphical objects that represent the various properties of the interface components and functions. Some controls display and allow editing of particular values. Other controls start associated commands. Each control has a unique appearance and operation designed for a specific form of interaction.

Mouse Controls

The mouse is an intuitive way of interacting with the application. The buttons can be used singularly, in conjunction with each other, and in conjunction with other keys on your keyboard to perform a variety of functions via shortcuts (on page 355).

Pressing and holding both mouse buttons is used for a variety of navigation methods including zooming in and out from scenes.

Left-mouse button: Referred to simply as the 'mouse' or 'left-click'. It is used for a number of selection functions including selecting objects, menu commands, buttons, and check boxes.

Right-mouse button: Referred to as 'right-click'. It is used for displaying the right-click menus; the available commands differ depending on the position of the cursor in the interface.

Middle/wheel button: Pressing and holding the middle or wheel button is used to perform certain zoom functions (on page 357).

Product Menus

The product menus (on page 198) are your main means of interacting with the application. Each menu contains commands used to perform various functions that relate to the application. Many menus contain sub-menus and commands.

Submenu buttons  **:** Indicates that the selected command includes a submenu.

On/off toggles  **:** Indicates that the menu command is 'on'.

Either/or toggles  **:** Indicates that the menu command is the one selected from a group of mutually exclusive commands.

Close buttons  **:** Used to close the current user interface component. For example, the various application dialogs.

Ellipsis  **:** Indicates that a dialog will appear from where you can select various options.

Keyboard shortcuts (on page 355): Menus display any available keyboard shortcuts to the right of the commands. For example, the File > Open command can be accessed via the keyboard shortcut CTRL+O.

Special Controls

Several special user interface controls are utilized within Deep Exploration, similar to the functionality in most Windows applications. These controls are graphical objects that represent the various properties of the interface components and functions. Some controls display and allow editing of particular values. Other controls start associated commands. Each control has a unique appearance and operation designed for a specific form of interaction.

Spinners

A spinner is a control for numeric fields. You can click or drag the spinner arrows to increment or decrement the value.

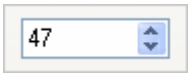

To change a value using a spinner, do any of the following:

- Click the spinner to increment or decrement the value.
- Drag up to increase the value, or drag down to decrease it.
- Press CTRL while you drag to increase the rate at which the value changes.

Sliders

Sliders work in a similar way to spinners but allow more control over the value.



To use a slider, do any of the following:

- Drag the slider arrow left to decrease the value.
- Drag the slider arrow right to increase the value.

Cyclical Dialog Fields

Many dialogs contain fields that can cycle through the options every time you click in the field.

Documentation Conventions

Certain conventions are used within the documentation to make it easier to use:

- Commands, tools, and selections are displayed in **bold** typeface. For example, click **OK**.
- Menu and submenu commands are separated by the greater-than (>) sign. For example, **File > Open**.
- Specific keystrokes are represented in capitals. For example, DELETE.
- Instructions are displayed as numbered steps.
- Related section headings are displayed in *italic* typeface if the section is within the current Help topic.
- Related section headings are linked (colored blue and underlined), to the appropriate section if it is located in another Help topic.
- Where the word 'the application' is mentioned, the content relates to the application that you are using.
- Where the word 'image' is mentioned, the content relates specifically to a 2D representation.

Copyright © Right Hemisphere 2006. All Rights Reserved.

- Where the word 'scene', 'model', or 'object' is mentioned, the content relates specifically to a 3D representation.
- Where words are displayed within square brackets [ ], substitute the relevant text for the described action.
- Where the plus (+) and minus (-) keys are mentioned, they relate to the number pad and not the QWERTY section of the keyboard.
- Where modules are mentioned, the term refers to products for which modules may be purchased.

Documentation

The following documentation is included with Right Hemisphere products:

Getting Started Guide: A guide to getting started for all Right Hemisphere applications and modules.

User Reference: In the form of online Help, this reference contains detailed information about all the features and capabilities of Deep Exploration. It is organized mainly by functional areas. Note that there may be more than one reference available depending on the application you are using.

Quick Reference Card: A list of the keyboard shortcuts may be provided depending on the product you have purchased.

Note: Only the online Help is available if you downloaded your product from the Internet.

Procedure

To view the Deep Exploration User Reference do one of the following:

- Choose **Help** on the menu bar and then click the name of the reference that you want to open.
- Press F1 on your keyboard to open the main User Reference.
- Click the Windows **Start** button, choose **Programs > Right Hemisphere > Deep Exploration**, and then click the name of the reference that you want to open.

Copyright © Right Hemisphere 2006. All Rights Reserved.

Using the Reference Online

This reference gives you information about every aspect of the software. Each topic contains an overview discussion followed by a 'Procedures' section with steps for using a command or feature, and sometimes an 'Interface' section detailing controls and parameters for the user interface.

Interface

Topic Overview—Tells you the name of the feature, command, user interface control, or concept, and gives you a description.

Procedures—Contains steps for tasks that illustrate the typical use of the feature.

Interface—Describes the controls for this feature as they appear in the user interface, with a description of their behaviors and settings.

Finding Information Fast

The online information system (Help User Reference) is a compiled HTML Help file and is viewed using the HTML Help Viewer. This section explains how to retrieve information quickly. Detailed information on using the HTML Help Viewer is explained later in this document.

Use the Navigation pane in the Help Window to get to information quickly. The pane comprises the Contents, Index and Search tabs that let you use search techniques for finding the information you need.

Contents Tab

The Contents tab displays the main sections of this online system as book icons. When you click a book, it expands to show the list of topics contained within it, like chapters in hard copy books.

If a book is expanded already, clicking on it collapses the topics.

Index Tab

The Index is an alphabetical listing of keywords found in each topic.

Keywords may be linked to more than one topic. You can also type the first few letters of a subject, the whole word or a number of words for which to search.

Search Tab

The Search tab summons a full-text search engine that operates on a database of every word in the reference, created when the HTML Help system was compiled. You can use tools on the Search tab to find the Help topics containing any word or phrase.

Procedures

To go to a topic from the Contents tab:

1. Click the Contents tab to display the table of contents.
2. Click the book icon representing the area for which you want information. The page icons for the book expand below representing all the topics for the book's feature area.
3. Click the page icon for the topic you want.

To go to a topic from the Index tab:

1. Click the Index tab to display the Help Index.
2. Do one of the following:
   - Double-click the keywords for which you want to to find information. The topic is displayed in the right pane. The topic is displayed in the right pane.
   - Type the subject you want to find in the 'Type in the keyword to find' field and press ENTER. The topic is either displayed in the right pane or, if a topic list is displayed, click the topic you require and click **Display**.

Using the HTML Help Viewer

This online information system is a compiled HTML Help (.chm) file; you view it using the HTML Help Viewer. The HTML Help Viewer is a two-pane window and a toolbar:

- The Navigation pane is on the left side of the window. It contains three navigational tabs, for Contents, Index and Search.
- The Topic pane is on the right side of the window. It displays the selected or default Help topic and is the pane from which you are reading right now.
- The Help Viewer toolbar comprises tools from which you can choose to help you use the Help Viewer and search for information.

Following are some tips on how to find more information when using the HTML Help Viewer:

- To link to another topic or a list of other topics, click the colored, underlined words in the Topic pane.
- Right-click the Contents tab or the Topic pane for shortcut menu commands.

Note: Most of information about using the HTML Help Viewer has been supplied directly by Microsoft. It has been made freely available for inclusion in HTML Help projects such as this one. This information has been edited and reformatted to match that of the other online information system delivered with this product.

Procedures

To find a Help topic:

1. In the Navigation pane, do one of the following:
   - Click the Contents tab to browse through a table of contents.
   - Click the Index tab, and then type a word or scroll through the list to see a list of index entries.

     Note: Topics are often indexed under more than one entry.

   - Click the Search tab, and then type the word to locate every occurrence of a word or phrase that may be contained in a Help file.
3. Click the contents entry, index entry, or search results entry to display the corresponding topic.

To see where the current topic fits in the table of contents:

While viewing the Index and Search tabs, press ALT+C. The Contents pane is displayed with the current topic highlighted.

To copy a Help topic:

1. Right-click in the pane of the topic you want to copy, and then click **Select All**.
2. Right-click again, and then click **Copy**.

Copyright © Right Hemisphere 2006. All Rights Reserved.

3. Paste the copied topic into the document you require.

To copy only part of a topic:

Select the text you want to copy, right-click, and then click **Copy**.

To print the current Help topic, do one of the following:

- Click the **Print** button on the toolbar, select the print options you require, and then click **OK**.
- Choose **Options > Print** on the toolbar, select the print options you require, and then click **OK**.
- Right-click a topic in the Topic pane and then click **Print** twice.
- Right-click a topic name on the Contents tab, click **Print**, select the print options you require, and then click **OK**.

To hide or show the Navigation pane:

On the toolbar, click **Hide** or **Show** to close or display the Navigation pane.

If you close the Help Viewer with the Navigation pane hidden, it is remains hidden when you next open the Help.

HTML Help Viewer Toolbar

File > Help
Keyboard F1



The Help Viewer toolbar contains a number of useful tools including print, refresh, and highlighting functionality.

Interface

Hide/Show 

—Hides or shows the Navigation pane.

Back 

—Moves to the previously viewed topic.

Print 

—Prints the current topic if the Topic pane is active. If the table of contents is active on the Navigation pane, you can choose to print the current topic, or the topic and its subtopics.

Options 

—Used to display the 'options' menu and modify the viewing settings.

- **Hide/Show Tabs—**Hides or shows the Navigation pane.
- **Back—**Moves to the previously viewed topic.
- **Forward—**Moves to the topic viewed after the previously viewed topic.
- **Home—**Displays the main topic of this online system.
- **Stop—**Halts the display of a topic.
- **Refresh—**Refreshes the Help display.
- **Internet Options**—Opens the Internet Options dialog and is used to modify browser settings. We recommend not using this command.

- **Print—**Prints the current topic if the Topic pane is active. If the table of contents is active on the Navigation pane, you can choose to print the current topic, or the topic and its subtopics.
- **Search Highlight On/Off—**Toggles highlighting on and off for each occurrence of a word or phrase found with a search.

Searching for Help Topics

A basic search consists of the word or phrase you want to find. You can use Boolean, wildcard, and nested expressions. You can also limit the search to previous results, match similar words, or search topic titles only to further define your search.

The basic rules for formulating queries are:

- Searches are not case-sensitive, so you can type your search in uppercase or lower-case characters.
- You may search for any combination of letters (a through z) and numbers (0 through 9).
- Punctuation marks such as the period, colon, semicolon, comma, and hyphen are ignored during a search.
- Group the elements of your search using double quotes or parentheses to set apart each element. You cannot search for quotation marks.

Note: If you are searching for a file name with an extension, you should group the entire string in double quotes, ("filename.ext"). Otherwise, the period breaks the file name into two separate terms and, as the default operation between terms is AND, the logical equivalent to "filename AND ext." is created.

Searching for Words or Phrases: Using Wildcards

You can search for words or phrases and use wildcard expressions. Wildcard expressions allow you to search for one or more characters using a question mark or asterisk.

You can select the Match Similar Words check box to include minor grammatical variations for the phrase you search.

The table below describes the results of these different kinds of searches.

Search for	Example	Results
A single word	select	Topics that contain the word, 'select'. Note that grammatical variations, such as 'selector' and 'selection' are also found.
A phrase	"new operation" or new operation	Topics that contain the literal phrase 'new operation' and all its grammatical variations. Without the quotation marks, the query is equivalent to specifying "new AND operation", which finds topics containing both of the individual words instead of the phrase.
Wildcard expressions	esc* or 80?86	Topics that contain the terms 'ESC', 'escape', 'escalation', and so on. The asterisk cannot be the only character in the term. Topics that contain the terms '80186', '80286', '80386', and so on. The question mark cannot be the only character in the term.

Defining Search Terms: Using Boolean Expressions

The AND, OR, NEAR and NOT operators enable you to precisely define your search by creating a relationship between search terms. The following table shows how you can use each of these operators. If no operator is specified, AND is used. For example, the query "spacing border printing" is equivalent to "spacing AND border AND printing".

Copyright © Right Hemisphere 2006. All Rights Reserved.

Search for	Example	Results
Both terms in the same topic.	operation AND parameter	Topics containing both the words 'operation' and 'parameter'.
Either term in a topic.	operation OR parameter	Topics containing either the word 'operation', or the word 'parameter' or both.
The first term without the second term.	operation NOT parameter	Topics containing the word 'operation', but not the word parameter.
Both terms in the same topic, close together.	operation NEAR parameter	Topics containing the word 'operation' within eight words of the word 'parameter'.

Note: The |, &, and ! characters do not work as Boolean operators (you must use OR, AND, and NOT).

Using Nested Expressions

Nested expressions allow you to create complex searches for information. For example, "XML AND ((operation OR parameter) NEAR configuration)" finds topics containing the word 'XML' along with the words 'operation' and 'configuration' close together, or containing 'XML' along with the words 'parameter' and 'configuration' close together.

The basic rules for searching Help topics using nested expressions are:

- You can use parentheses to nest expressions within a query. The expressions in parentheses are evaluated before the rest of the query.
- If a query does not contain a nested expression, it is evaluated from left to right. For example. "XML not operation OR parameter" finds topics containing the word 'XML' without the word 'operation', or topics containing the word 'parameter'. On the other hand, "XML not (operation OR parameter)" finds topics containing the word 'XML' without either of the words 'operation' or 'parameter'.
- You cannot nest expressions more than five levels deep.

If you search for words within the HTML files, all HTML topic files are searched, including any that are not listed in the table of contents.

If you search for words that are similar to your search term, you can include minor grammatical variations for the phrase you search. For example, a search on the word 'add' finds 'add', 'adds', and 'added'. This feature only locates variations of the word with common suffixes. For example, a search on the word 'add' finds 'added', but not 'additive'.

If you search only the last group of topics you searched, you can narrow a search that results in too many topics found. You can also search through your results list from a previous search.

When searching for words in Help topics, you can have each occurrence of the word or phrase highlighted in the topics that are found. If you are viewing a long topic, only the first 500 instances of a search word or phrase are highlighted.

Procedures

To go to a topic from the Search tab:

1. Click the Search tab, and then type the word or phrase you want to find.
2. Click the 'Boolean' button to the right of the text field, and then one of the operator names to add Boolean operators to your search.
3. If required, do one of the following:

- To define a search precisely, use a wildcard expression, nested expression, and Boolean operators.
- To request similar word matches, search only the topic titles or search the results of a previous search.

4. Click **List Topics**, choose the topic you want, and then click **Display**.

Note: To sort the topic list alphabetically, click the Title column heading.

To search for words in the titles of HTML files:

1. Click the Search tab, type the word or phrase you want to find.
2. Select the Search titles only check box.
3. Click **List Topics**, choose the topic you want, and then click **Display**.

To find words similar to your search term:

1. Click the Search tab, type the word or phrase you want to find.
2. Select the Match similar words check box.
3. Click **List Topics**, choose the topic you want, and then click **Display**.

To search only the last group of topics you searched:

1. On the Search tab, select the Search previous results check box.
2. Click **List Topics**, choose the topic you want, and then click **Display**.

Note: If you want to search through all of the files in a Help system, this check box must be off. If you previously used this feature, the Search tab opens with this check box turned on.

To repeat an earlier search:

Click the down arrow on the text-entry field, select a previously used search string, and then click **List Topics**.

To highlight words in searched topics:

Choose **Options > Search Highlight On** on the Help Viewer toolbar.

To turn highlighting off:

Choose **Options > Search Highlight Off** on the Help Viewer toolbar.

Keyboard Shortcuts: Help Viewer

The following keyboard shortcuts can be used for navigation in the Help Viewer.

Action	Keyboard Shortcut
Close the Help Viewer	ALT+F4
Switch between the Help Viewer and other open windows	ALT+TAB
Display the Options menu	ALT+O
Hide or show the Navigation pane	ALT+O and then press T
Print a topic	ALT+O and then press P Right-click in the Topic pane and click Print
Move back to the previous topic	ALT+LEFT ARROW ALT+O, and then press B

Copyright © Right Hemisphere 2006. All Rights Reserved.

Move forward to the next topic if you have just viewed it	ALT+RIGHT ARROW ALT+O, and then press F
Turn on or off search highlighting	ALT+O and then press O
Return to the home page	ALT+O and then press H
Switch between the Navigation and Topic panes	F6
Scroll through a topic	UP ARROW and DOWN ARROW PAGE UP and PAGE DOWN
Scroll through all the links in a topic	TAB

Contents Tab

The following keyboard shortcuts can be used for navigation in the Contents tab of the Help Viewer.

Action	Keyboard Shortcut
Display the Contents tab Note: Use this shortcut to see where a topic fits in the table of contents.	ALT+C
Open and close a book/folder	PLUS SIGN and MINUS SIGN LEFT ARROW and RIGHT ARROW
Choose a topic	DOWN ARROW and UP ARROW
Display the selected topic	ENTER

Index Tab

The following keyboard shortcuts can be used for navigation in the Index tab of the Help Viewer.

Action	Keyboard Shortcut
Display the Index tab	ALT+N
Type a keyword for which to search	ALT+W and then type the word
Choose a keyword in the list	UP ARROW and DOWN ARROW
Display the associated topic	ALT+D

Search Tab

The following keyboard shortcuts can be used for navigation in the Search tab of the Help Viewer.

Action	Keyboard Shortcut
Display the Search tab	ALT+S
Type a keyword for which to search	ALT+W and then type the word
Start a search	ALT+L
Choose a topic in the results list	ALT+T and then UP ARROW and DOWN ARROW
Display the selected topic	ALT+D
Search for a keyword in the result list of a prior search	ALT+U and press ENTER
Search for words similar to the keyword. For example, to find words like 'running' and 'runs' for the keyword 'run'.	ALT+M and press ENTER
Search through topic titles only	ALT+R and press ENTER

Support

Online

Our online support page contains technical support information relating to all of the Right Hemisphere products. It provides access to the latest patch releases, tutorials, links to the registration pages, and the Right Hemisphere Forum including newsletters, FAQs, and tips and tricks.

Please take the time to check the support page (http://www.righthemisphere.com/support/) if you have any queries before sending us an e-mail, in particular, you should check the FAQs. It is most likely that the answer is right there!

Registration and Activation

If you require assistance with registration or activation, please contact us using our support form (http://www.righthemisphere.com/support/contact_support.php3).

eLicensing

If you are activating a product using eLicensing and require assistance, please e-mail eLicense support (mailto:support@elicense.com).

Note: eLicensing is applicable for certain Right Hemisphere products only and may not be the licensing method for the application you have installed. See Registration and Activation (on page 19) for further information.

Help

The application User Reference is accessed from the product menu and, depending on the product you are using, by pressing F1. It contains detailed information about all the product features and capabilities and includes guides to the program controls.

Tutorials

Product tutorials are continually updated and are available at the Right Hemisphere Web site (http://www.righthemisphere.com/support/tutorials/). Please note that the Deep Creator tutorials are available from within the product itself.

FAQs and Troubleshooting

The FAQs (http://www.righthemisphere.com/support/), Frequently Asked Questions are continually updated and you should check these on a regular basis.

Copyright © Right Hemisphere 2006. All Rights Reserved.

Updating

Menu bar > Help > Internet Update

Deep Exploration can be updated in a number of different ways:

- Manual and automatic updates via Deep Exploration's Help menu. This method uses Right Hemisphere's Cortex utility (http://www.righthemisphere.com/support/help/cortex/cortex_readme.htm), which is installed by default when Deep Exploration is installed.
- Manual updates from within the Cortex utility.
- Manual updates via the Patches section http://www.righthemisphere.com/support/register/all_reg2.php?ara=1 of the Right Hemisphere Web site.

Below, we describe the process of updating files from within Deep Exploration. Please see the Cortex Help documentation for further information.

Cortex Updates

By default, Cortex automatically checks for new plugins every two weeks. However, you can specify the frequency by which the plugins are updated using the Update dialog (on page 239). For example, you can set Cortex to update Deep Exploration every month or every week.

You are advised if there are new files, and from there you can either immediately update Deep Exploration or ignore the updates until you are ready. You can also manually check for updates at any time.

Note: You must have an Internet connection to be advised of the latest updates. If you do not have a connection, you can subscribe for the latest technical bulletin (http://www.righthemisphere.com/support/newsletter/index.php) to be advised of the updates.

During the update process, Cortex compares the current files (located in Deep Exploration's installation folder), with the latest file versions (located on the Right Hemisphere Web site). Note that if a new version of Cortex is available, it must be updated before plugins or modules are updated.

Automatic updates are performed after Deep Exploration is started and the specified time interval has elapsed. They can be disabled from within Cortex or when Cortex is checking for updates.

If a new version of Cortex is available, it must be updated before plugins or modules are updated.

When updating, any new files that are found are downloaded in a compressed format. They are then decompressed and copied to Deep Exploration's folder. You can change the location where Cortex looks for updates from with the Cortex utility. For example, a local update server.

Certain folder 'write' permissions are required to update plugins. When Deep Exploration is installed, a user group is created for it that has 'write' permissions to the Deep Exploration's plugin folder and to Cortex's root folder. If you want to update Deep Exploration, you must belong to that application user group.

Note: Certain user groups already have the required permission to update Deep Exploration. For example, Administrators and Power Users.

Procedures

To trigger a file update:

1. Choose **Help > Internet Update** on the menu bar.
2. Click **Update Now**.
3. Do one of the following:
   - Click **Yes** to continue the update process.
   - Click **OK** if there are no files to update.
   - Click **Settings** to modify the time of the next update.

Note: The dialog displays the size of the update that will be downloaded. You can exit the update process by clicking No.

To modify the update frequency:

1. Choose **Help > Internet Update** on the menu bar.
2. Select the 'Automatically update' check box.
3. Select the update frequency in the Update field.
4. Click **OK**.

Copyright © Right Hemisphere 2006. All Rights Reserved.

Secure Online Ordering

Right Hemisphere products can be purchased through re-sellers or from the Right Hemisphere Store (http://www.righthemisphere.com/store/).

Our Secure Online Ordering services ensure that your confidential information remains confidential. Products delivered via our Web site (http://www.righthemisphere.com) are processed as soon as your payment is received, while orders for boxed products are usually processed within one business day.

With your Right Hemisphere product, you receive a Serial Number/Order ID used to register and activate the product. For download sales, this is sent via e-mail.

If you make a payment but do not receive confirmation with your Serial Number/Order ID within a reasonable amount of time (two business days for credit card payments or two weeks for other payments), please contact us (http://www.righthemisphere.com/contact/).

For information on multiple pricing (five or more licenses), purchase orders, wire transfers and educational discounts, please contact us (http://www.righthemisphere.com/contact/).

Deep Exploration Overview

Deep Exploration is a desktop application used to manage 2D, 3D, animation, video and audio assets. Myriad tools allow you to explore, view, transform, optimize, animate, and publish in a number of formats. While searching for files, you can carry out other activities and, you are alerted when files are found for file preview and file download selection. You can also keep track of your viewed images and select the most recent, and you can create and present slide shows, either in windows or as full-screen presentations.

Deep Exploration is sold in two forms: the CAD Edition and the Standard Edition. The CAD Edition supports opening and importing all supported CAD file types (on page 526).

The application encompasses industry leading, consistent file conversion and an SDK is available to create custom graphics, management and manipulation tools.

Deep Exploration uses metadata to display a variety of graphics information. For example, you may view the number of vertices, sub-objects and the texture bitmaps in a drawing. You can pan, rotate and zoom to explore 3D models, add comments, cameras and lights, and you can view object details, sub-objects and textures.

Some of the numerous features include:

- Rapid import process.
- 3D objects and materials browse capability.
- 3D model and texture Web search.
- File history browse facility.
- Effortless organization of 3D models.
- Display and hide separate objects.
- Multiple viewports.
- Gradient and image background, and shadow display.
- Object position controls.
- Slide show creation.
- Thumbnail generation.
- Built-in export features.
- Batch processing.
- Creation of user-defined views based on the current scene view.
- Easy management of plugins, registration, and licensing.
- Full-screen display mode with auto-hide toolbars.
- Export to the Universal 3D format (.u3d) and then insert the .u3d files into Adobe PDF documents.
- Layers are utilized to group scene objects into a single hierarchy level.
- Background images can be added to scenes.
- Distance measurements between elements or within a single element.
- Creation of preset 3D objects (primitives) including spheres, stairs, gears, and archways.
- Ability to alter 3D objects while keeping file sizes to a minimum.
- Object instancing.
- Advanced material display.

Copyright © Right Hemisphere 2006. All Rights Reserved.

What's New in Deep Exploration?

The new features of Deep Exploration will improve the way you use the application and the quality of work it helps you create. The following links will take you to the individual topics that describe each feature:

- A complete redesign of the user interface providing common Windows customization features (on page 345) to maximize the work-space for greater productivity.
- Multiple viewports (on page 61) can display up to four simultaneous views of a model allowing for easy alignment of components.
- Measurements (on page 145) allow for accurate measurement and dimensioning of objects; retrieval of length, diameter, and radius dimensions.
- Layers (on page 139) provide a way for arbitrary groupings of scene components allowing an alternate way to group, manage, and display geometry and scene elements.
- Creation of primitive objects and applying complex modifiers (on page 155) on any geometry.
- Gradient (on page 228) and image backgrounds (on page 80): Gradients and background images can be used as the viewport background. The background image can be locked to an aspect ratio to allow simple compositing of models into a scene.
- Shadow display (on page 81) can be projected from the model onto the scene grid.
- Object position controls (on page 266) are an interactive display of an object's position, rotation, and scale that allows precise object transformation.
- Model views (on page 75) store the current camera position, object visibility and render mode.
- 'Steps (on page 164)' store collections of animation sequences and arbitrary text, and are useful for illustrating assembly/disassembly instructions.
- New 3D selection tools (on page 295): Objects and elements can be selected with a larger range of precision tools. This enables objects of complex shapes to be selected during model cleanup or animation work.
- Advanced material functionality (on page 287): Thumbnail display allowing easy identification; they can be dragged into scenes; associated object selection by material; removal of duplicate or unused materials.
- Object instancing (on page 84): Deep Exploration now stores only one instance of any given part. That part is then transformed and duplicated as required to 'instance' the same part based on it's usage in the scene. This makes better use of memory and facilitate parts management and reporting.
- Bill of Materials source selection (on page 126): including from the current scene geometry or an external Bill of Materials (BOM) file.
- Highlighting and transparency (on page 225) can be used to distinguish individual, selected, and unselected objects.
- Duplication of objects (on page 90) while moving, rotating, or scaling.
- Improved markup entities (on page 141); callouts, dimensions, and Teamwork markups.
- CADTools (on page 109) and Illustration (on page 134), Realight (on page 157), and UV Mapping (on page 172) are included in the CAD Edition of Deep Exploration 4.
- Gateway Module (on page **Error! Bookmark not defined.**): Used to quickly and easily browse for assets and derivatives within Deep Server databases to which you have access rights.
- PDF Publishing Module (on page 188) enables you to open, view, and save PDF documents containing 3D content.
- PMI Module (on page 194) enables you to extract and display all the Product Manufacturing Information (PMI), and any metadata associated with CATIA 5 and JT and files.

Getting Started with Deep Exploration

This section is designed to help you get started with Deep Exploration.

Procedure

To start Deep Exploration, do one of the following:

- Click the Windows **Start** button, choose **Programs**, and then click **Deep Exploration**.
- Double-click the Deep Exploration .exe file in Windows Explorer or, if so configured, on your desktop.

You can now begin using Deep Exploration (on page 40).

Copyright © Right Hemisphere 2006. All Rights Reserved.

Using Deep Exploration

Once you have started Deep Exploration, you can search for, open and view, modify, convert, and manage your 2D and 3D files.

This section presents these topics, designed to help you use and understand Deep Exploration. It also introduces you to the Deep Exploration terminology and some essential features.

The User Interface (on page 198) section presents the program controls and shows you where to find them.

Creating New Scenes

Menu bar > File > New
Standard toolbar > New Empty Scene

You can create a new empty scene in the .rh format, then add complex models to that scene, edit it, and then save it to another file format.

Procedure

To create a new empty scene, do one of the following:

- Choose **File > New** on the menu bar.
- Click **New Empty Scene**  on the Standard toolbar.
- Click a file in the File list (on page 310).
- Press CTRL+SHIFT+N on your keyboard.

Copyright © Right Hemisphere 2006. All Rights Reserved.

Opening Files

Menu bar > File > Open
Standard toolbar > Open a File

You can use a number of methods to open (load) and view supported files.

If you select a specific type of file to open (file format) and the file contains import properties (on page 43), the Settings button is enabled allowing you to modify the import properties and then open the file with your settings applied. Note that if you modify the import properties for a particular format, those settings are applied to any file of the same format when it is opened or reloaded (on page 42).

When opening files, if the currently opened file has not been modified, you can open another file by a single-click. If the current file has been modified, for example, if materials, shaders, textures, or animation has been added, you must double-click another file to open it.

Note: When you open an archive file (on page 630), the contents are automatically displayed in the File list.

If the selected file takes a long time to open, you can cancel the opening operation.

Please see the appendices for more information on the supported file formats.

Procedures

To open a file, do one of the following:

- Choose **File > Open** on the menu bar, search for and select the file you want to open, and click **Open**.
- Click **Open a File**  on the Standard toolbar, search for and select the file you want to open, and click **Open**.
- Click a file in the File list (on page 310).
- Press CTRL+O on your keyboard, search for and select the file you want to open, and click **Open**.

Note: If the file does not load, the selected format may not match the file's true format or the file may be damaged.

To cancel the file opening operation:

Click the **Stop** button  on the Standard toolbar.

Importing Files

Menu bar > File > Open > Settings
Standard toolbar > Open > Settings
Keyboard > CTRL+O > Settings
Right-click file in History or File list > Import Options

If a file contains import properties, you can modify those properties via the Import Options dialog, and then apply them to the file. Once you have modified the import properties for a particular file format, those settings are applied to any file of the same format when it is opened (on page 42) or reloaded (on page 55).

Please see the appendices for information on all supported file formats.

Note: When importing a scene that contains bones, a new layer (on page 139) is created and all the bones are assigned to that layer.

Import Options

The tabs and the options displayed when importing a file differ depending on the selected file format and on the form of Deep Exploration you have installed; the CAD Edition, or the Standard Edition with the various modules (on page 15):

- The CAD Edition delivers the Method A import options.
- The Standard Edition and the various modules (on page 15) delivers both the Legacy and Method A import options.

Many tabs and options are identical across different file formats. The common settings are described in the General tab topic (on page 44). Any unique settings are described in the individual file format topics located within the appendices.

Note that support for the CAD format versions (on page 526) also differs depending on the version of Deep Exploration you have installed.

Procedure

To modify file import properties:

1. Do one of the following:
   - Choose **File > Open** on the menu bar, select the type of file you want to open, select the file, and then click **Settings**.
   - Click the **Open** button  on the Standard toolbar, select the type of file you want to open, select the file, and then click **Settings**.

     Note: You must select the file type for the Settings button to become active.
   - Press CTRL+O on your keyboard, search for and select the file you want to open, and click **Settings**.
   - Right-click a file in the History or File list and click **Import Options**.

   Note: If the file does not load, the selected format may not match the file's true format or the file may be damaged.
2. Make the selections you require.
3. Do one of the following:
   - If you are opening a file via the Open command, button, or keyboard shortcut, click **OK** and then click **Open**.

Copyright © Right Hemisphere 2006. All Rights Reserved.

- If you are opening a file via the File or History list, click **OK**.

4. Reload the file.

Note: You can also access the Import Options dialog for each file format via the Plugin Manager (on page 153). The settings are applied when you next open a file of that particular format.

General Tab

Menu bar > File > Open > Settings > General tab
Standard toolbar > Open > Settings > General tab
Keyboard > CTRL+O > Settings > General tab
Right-click file in History or File list > Import Options > General tab

The General tab is used to define the import properties for the selected file format.

The tabs and the options displayed when importing a file differ depending on the selected file format. However, many tabs and options are identical across different file formats. These settings are described in the individual file format topics located within the appendices.

Please see the appendices for information on all supported file formats.

Geometry Transform

Import Options dialog > General tab > Geometry Transform

The Geometry Transform settings are used to transform (rotate, position, and scale) the scene along the X, Y, and Z axes. For example, the following examples show a scene rotated to 0, 0, 0 degrees, and to 90, 0, 180 degrees.

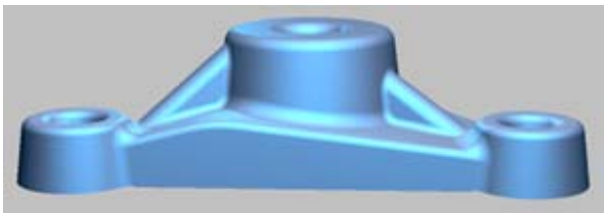

Rotation values 0,0,0

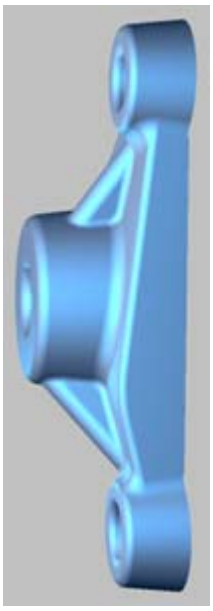

Rotation values 90,0,180

Tessellation Settings

Tessellation can be used to modify the arrangement and density of models' polygons. In doing so, a finer mesh is created for models as the curvature gets tighter.

Surface Deviation

Surface deviation is the maximum distance that is allowed between a surface described by the BREPs (boundary representations), and the polygons that are produced by the tessellation process to approximate that surface. That is, between an edge and its tessellation. A smaller surface deviation causes more polygons to be produced creating smoother models. The units are expressed as unit size based on those used by the model.

In the images below, the first has a surface deviation of 0.5, and the second has a deviation of 0.05. The first image displays a roughly approximated surface curve. The second image contains many more faces than the first and therefore displays a smoother approximation of the curve circumference.

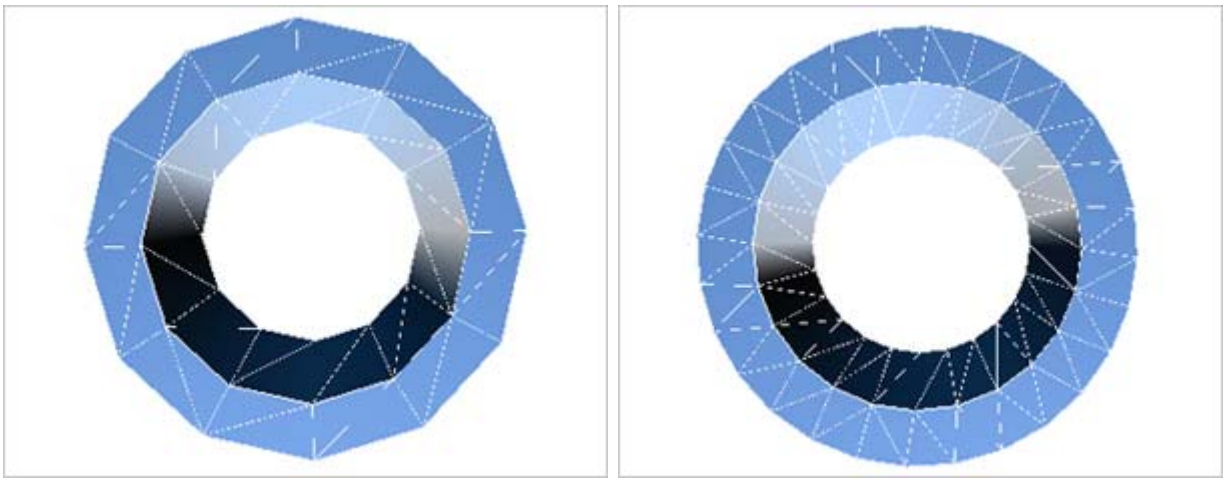

Surface deviation 0.5 / Surface deviation 0.05

Copyright © Right Hemisphere 2006. All Rights Reserved.

Normal Deviation

Normal deviation is the maximum angular deviation allowed between a face and its triangulation. Pairs of triangles cannot incorporate a dihedral angle greater than this amount. This units are expressed in degrees.

This setting determines the minimum number of faces that may represent the circumference of a true cylinder, regardless of the Surface Deviation setting. Medium and small objects relative to the total scene bounding box may well easily fall within surface tolerance tessellation tolerances with perhaps only four or five sides representing a true cylindrical surface. Therefore, by using this tolerance setting you are controlling the 'coarseness' of tessellation regardless of the geometry's relative size in the scene. For example, an angle of 30 results in a 12-sided tessellated cylinder, and an angle of 45 results in an 8-sided tessellated cylinder. When importing files using Method A, the minimum normal deviation for holes or small cylinders is 45 meaning the minimum number of sides for these will be eight.

In the images below, the first has a normal deviation of 30; the second has a deviation of 5 and contains has many more polygons than the first.

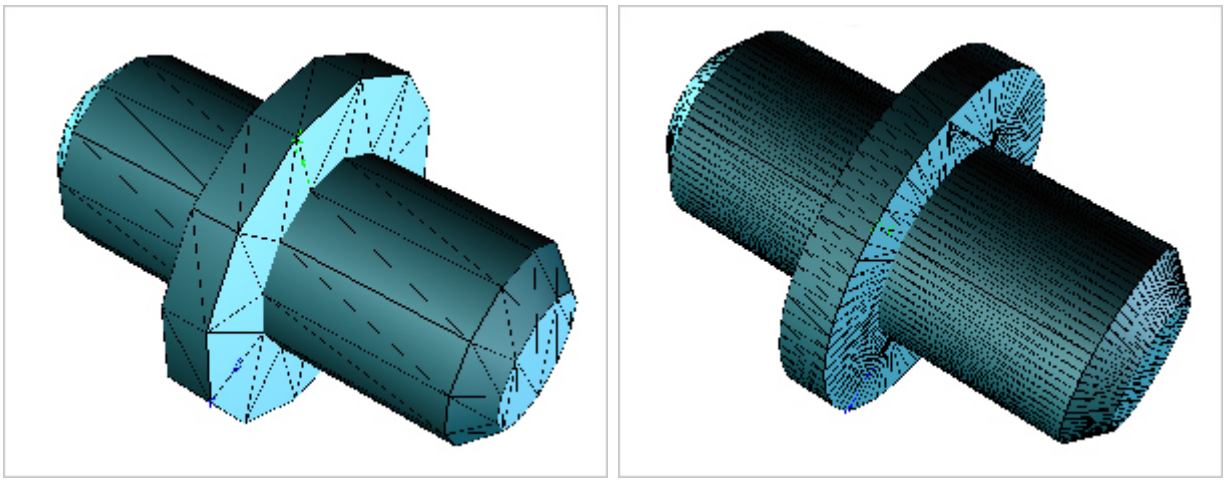

Normal deviation 30 degrees / Normal deviation 5 degrees

Note: Normal deviation is also known as 'angle tolerance'.

Default Tessellation

The following examples show the different 'look' of the same file using each of the four default tessellation settings when the file is imported.

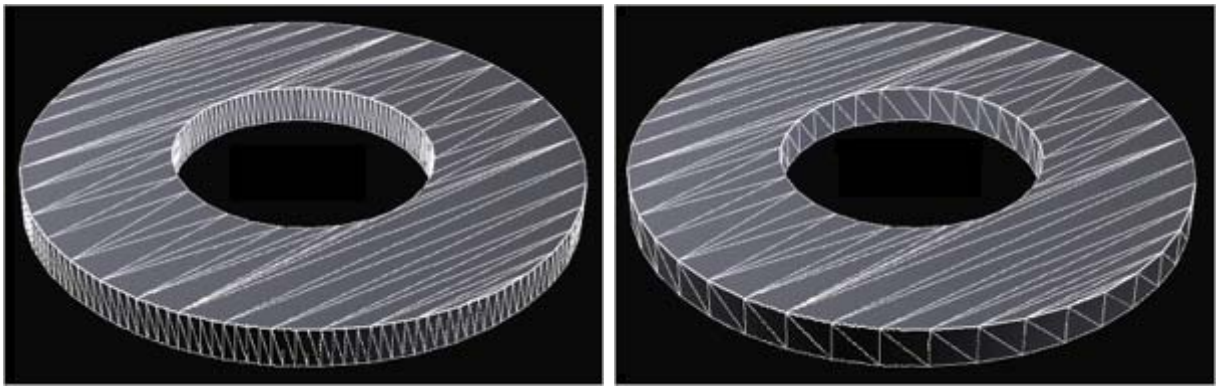

Very High (vertices 576, faces 726) / High (vertices 144, faces 294)

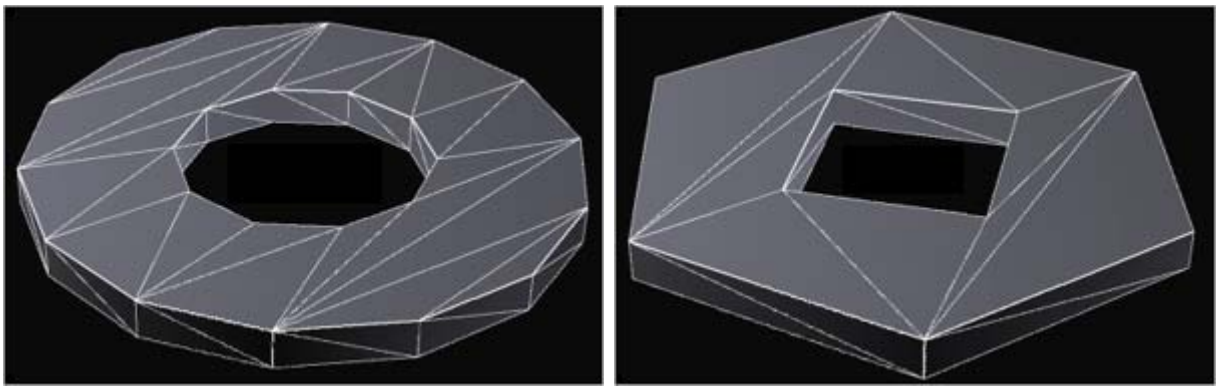

Medium (vertices 48, faces 102) / Low (vertices 20, faces 62)

Grid Aspect Ratio

Grid aspect ratio determines the ratio (between 0 and 1) of the width to height for each 'surface square'. That is, each group of polygons that makes up a square on an object's surface. The units are expressed as a fraction. Grid aspect ratio helps to avoids the creation of very long, narrow triangles which can cause undesirable lighting and shading artifacts.

For example, a value of 1 causes the tessellation process to attempt to produce squares instead of rectangles. A value of 0.5 causes the process to attempt to produce rectangles instead of squares. These rectangles would have a 2:1 ratio.

As this is the ratio of longest side to shortest side, the value for the grid aspect ratio option can never be greater than 1; a value of 0 effectively disables the option as there are no constraints on the shape of the quad patches, a value of 1 creates square patches, and a value of 0.5 creates patches that are half as wide as they are long.

Whatever the setting, the quad patches are further subdivided into 2 triangles each.

In the images below, the first has a grid aspect ratio of 0; the second has a ratio of 1 and comprises more polygons which are nearly square.

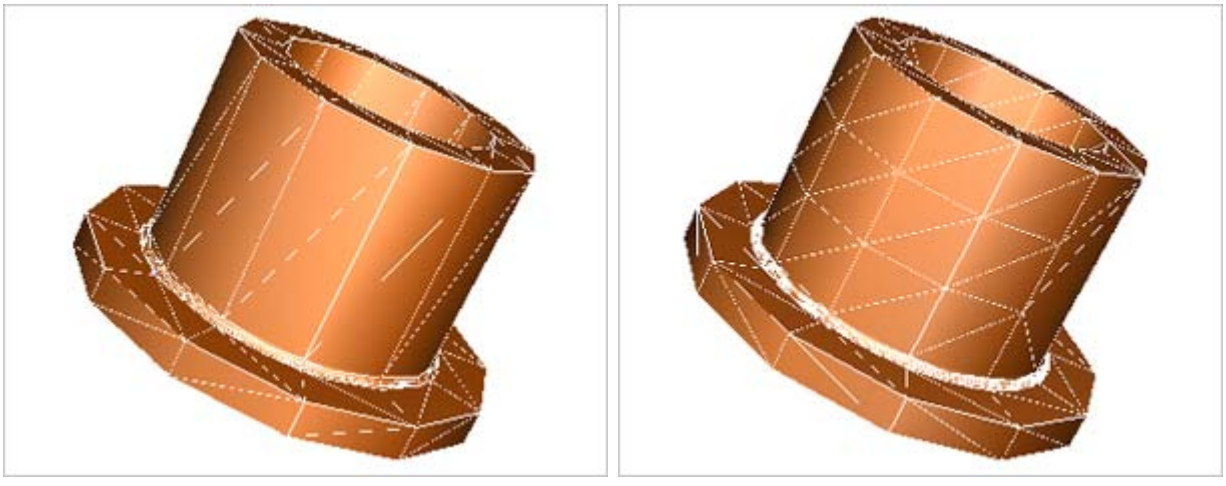

Grid aspect ratio 0 / Grid aspect ratio 1

Maximum Edge Length

Maximum edge length restricts the maximum edge length in the tessellated model to a certain length. The units are expressed as a percentage of the size of the object's bounding box diagonal; each edge must be smaller than the result of multiplying the diagonal length of the objects' bounding box and the percentage entered. The smaller the maximum edge length that you enter, the finer the tessellation.

Copyright © Right Hemisphere 2006. All Rights Reserved.

For example, if you enter a value of 10%, the edge length of each polygon is divided until it is no longer than the length of the object's bounding box diagonal x 0.1.

In the images below, the first has a maximum edge length of 100%; the second has a length of 10% and contains has many more faces than the first.

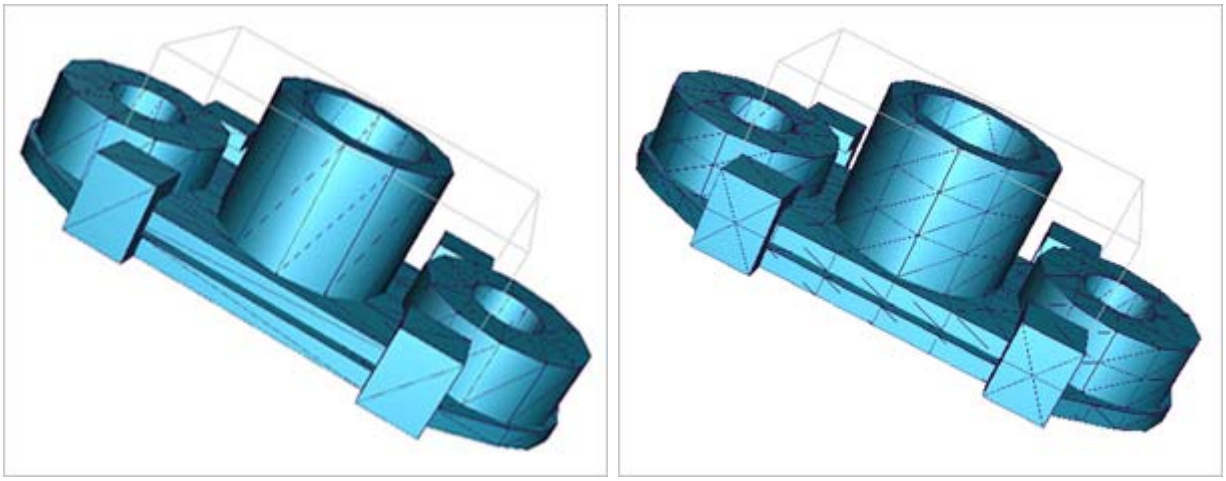

Maximum edge length 100% / Maximum edge length 10%

Angle Tolerance

Angle tolerance is the maximum angular deviation allowed between a face and its triangulation. Pairs of triangles do not incorporate a dihedral angle greater than this amount. This parameter gives a user added control over faces with very small radii. Lower values result in finer tessellations, while higher values give coarser tessellations.

Planar Tolerance

Planar tolerance is the maximum distance allowed between a face and its triangulation. Triangle interiors do not deviate from the face interior by more than this amount. The units are expressed in unit size based on those used by the model.

Tessellation Tolerance

Tessellation tolerance is the maximum distance allowed between an edge/curve and its tessellation, or the maximum distance between the edge and the side of the facets along the edge when tessellating faces. Triangle edges do not deviate from edges of the face by more than this amount, or by more than the maximum distance between the edge and the side of the facets along the edge when used in face triangulation.

This setting is similar to surface deviation. However, it also measures the angular tolerance when approximating curves. The units are expressed as unit size based on those used by the model.

Accelerator Files

You can reduce the time required to retrieve an part or assembly files by saving the file instance in an 'instance accelerator file' with the Pro/ENGINEER software (http://www.ptc.com/). Each instance is saved in its own unique accelerator file: part instance files are called instance[name].xpr and assembly instance files are called instance[name].xas.

Note that the following information relates to Pro/ENGINEER only.

Saving Parts and Assembly Instances

Saving instances of parts and assemblies is controlled by the Save Instance Accelerator variable. This variable can be modified in Pro/ENGINEER using one of two methods:

- By setting the configuration file option 'save_instance_accelerator'.
- By choosing Files > Instance Operations > Accelerator Options to open the Instance Accelerator dialog and establish the settings.

Procedure

To save the accelerator file with the instance, do one of the following:

- Click **Open in the Family Table**, and then choose **File > Save** or **File > Save a Copy** on the menu bar. The instance is saved as a separate model file.
- Choose **File > Save** on the menu bar. The entire model file is saved and the instance is saved through a higher level object.

Interface

None—Saves the accelerator file by saving the generic model and its Family Table.

Always—Saves the accelerator file when the instance itself is explicitly saved. This can be by opening an instance in a new window, and then saving the instance as a separate model file, or by saving the entire model file and the instance through a higher level object.

Explicit—The accelerator file is saved when the instance itself is explicitly saved, as described above.

Copyright © Right Hemisphere 2006. All Rights Reserved.

Searching for Files

Menu bar > View > Explorer Bar > Search
Click current panel or list menu bar > Search
Standard toolbar > Search

Using the Search panel, you can search for files locally or through the World Wide Web (Web), and you can continue using Deep Exploration when a search is being performed.

When files are found, a Search tab (on page 314) appears in the File list (on page 310) displaying all the files matching the search criteria. From here you can refine your search further (on page 53), preview the found files, and load the file you require.

You can also perform searches using the Gateway Module (on page **Error! Bookmark not defined.**).

Procedures

To begin searching for files:

1. Do one of the following to display the Search panel (on page 245):
   - Choose View > Explorer Bar > Search on the menu bar.
   - Click the **Search** button  on the Standard toolbar.
   - Click the currently displayed panel or list menu bar, and then click Search .
2. Do one of the following:
   - Click **Local file search** to search through your computer's hard drive and any network drives to which you are connected.
   - Click **Web search** to search the Web.
3. Continue at Local File Search (on page 50) or Web Search (on page 51).

To perform a new search:

1. Click **New Search**  on the Search panel toolbar.
2. Enter the new details for the search and click **Search**.

To close a Search tab:

Click **Close**  on the tab that you want to close.

To sort files and folders:

Click a column name for the column on which you want to sort. Depending on the order in which they were originally, the files and folders are sorted in ascending or descending order. A small triangle on the column name indicates the order type.

Local File Search

Menu bar > View > Explorer Bar > Search > Local file search

When you search locally for files using the Local Search panel (on page 246), Deep Exploration searches though sub-folders of the selected drive by default. You can choose to search through the drive only and exclude searching thorough sub-folders, and you can also search for specific file types (formats).

Procedure

To search for a local file:

1. Enter a file name if you want to search for a file with that name.
2. Select the Type check box and select a format if you want to search for a specific type of file.
3. Select the drive through which you want to search in the 'Look in' field.
4. Clear the 'Search sub-folders' check box if you want to search through the selected drive only.
5. Click **Search**.

Any files that match the search criteria are displayed in a Search tab (on page 314).

Note: You can stop searching at any point by clicking the Stop Search button.

Web Search

Menu bar > View > Explorer Bar > Search > Web search

Using the Web Search panel (on page 246), you can search for model files, and texture files through the Web. You can customize the search parameters such as adding and removing 2D and 3D file extensions, selecting a destination folder in which to download files, and setting the number of concurrent searches to perform.

The number of concurrent searches, that is search 'threads' determines how many search engines are searched at the same time. These search engines are specified in the configuration file when Deep Exploration is installed. For example, if there are 20 search engines specified in the configuration file and you enter 5 search threads, Deep Exploration searches through the first four search engines, then the next four and so on, five times until all 20 search engines have been searched. This functionality is used to increase the speed of Web searches and is dependent on your Internet Service Provider (ISP) and bandwidth etc.

After searching, you can:

- Sort the results in ascending or descending order by Name, Location, Size, Engine, or Site.
- Choose to download files and folders into the destination folder.
- Get the file size information.
- Open the containing Web page of the file. We recommend looking at this to confirm any copyright issues for the file.
- Generate thumbnails. This is especially helpful if you have downloaded a number of different textures.

Procedures

To search for a file through the Web:

1. Enter a file name.

Copyright © Right Hemisphere 2006. All Rights Reserved.

Note: This is a mandatory field and must be entered.

2. Do one of the following:
   - Click the **Models** option button to search for models files.
   - Click the **Textures** option button to search for texture files.
3. Click the **Search Settings** button. The Web Search Settings dialog appears and displays the default 2D and 3D search extensions.
4. Click **Browse**, navigate to and select the folder in which to download files.
5. Click **OK**.
6. Do one or more of the following to add or remove search extensions:
   - To add extensions, enter the extension type in the 2D or 3D files Add extension fields and click **Add**. The extension is added to the Extensions list.
   - To remove extensions, click the extension type in the 2D or 3D files Extensions lists and click **Remove**. The extension is removed from the Extensions list.

     Note: The .zip extension is automatically included in all searches by default.

   - Enter the number of concurrent searches you want the application to perform in the Number of search threads field.
7. Click **OK**.
8. Click **Search**.

Any files that match the search criteria are displayed in a Search tab (on page 314).

Note: You can stop searching at any point by clicking the Stop Search button.

To download files from the Web:

1. Do one of the following in the File list:
   - To download a single file or folder, right-click the file or folder that you want to download.
   - To download multiple files and folders, select the files that you want to download, and then right-click your selection. You can use SHIFT to select adjacent files, and CTRL to select non-adjacent files.
2. Click **Download Now**. The files are downloaded to the destination folder.

To get the file size:

Right-click the file and click **Get File Size**. The file size is displayed in the Size column.

Note: This can take some time depending on the Web site where the file resides.

To open the Web page containing a file:

Right-click the file and click **Open Info Page**. The containing Web page is opened in your Internet browser.

Refining Searches

Menu bar > View > Explorer Bar > Search > Local file search
Menu bar > View > Explorer Bar > Search > Web search

You can refine searches by typing letters in the Search field in the File list 'search' tabs.

As you type letters, the files that match the specified criteria are selected immediately. As you continue changing the criteria, so too does the file selection.

For example, if you choose to select files by name with the letter 'd', all files that contain 'd' in their name are selected. For example, the files called Dragon, Bone-head, Bone-right quad and Bone-right quad01. If you then typed the letter 'r', all files that contain 'dr' in their name are selected. For example, the object called Dragon.

Refining Search Rules

The basic rules for refining searches are:

- You may use for any combination of letters (a through z) and numbers (0 through 9).
- The text entered must be in the correct order. For example, if you want to select objects with the name 'dragon' in them, you can enter 'dr' but not 'rd'.

Procedure

To refine a search:

Type characters in the Search field of the Search tab (on page 314) for which you want to refine the search. You search is refined immediately.

Copyright © Right Hemisphere 2006. All Rights Reserved.

Merging Files

Menu bar > File > Merge File
Drag file from File list
Right-click and drag file from File list

The user can show several visualizations at the same time by merging the same file or different files into the current scene.

Procedures

To merge a file using merge options:

1. Open the file (on page 42) into which you want to merge another file.
2. Do one of the following:
   - Choose **File > Merge File** from the menu bar, navigate to and select the file you want to merge, and click **Merge Options**.
   - Right-click the file that you want to merge in the File list and drag it into the current scene.
3. Select the merge options (on page 201) you require.
4. Click **Open**.

To merge file without using merge options:

1. Open the file into which you want to merge another file.
2. Do one of the following:
   - Modify the import options (on page 43) of the same file without reloading the file.
   - Modify the import options of a different file if required.
3. Drag the file you want to merge from the File list into the current scene within the viewport.

The viewport displays the two files. If you modified the import options, one file displays the original settings and the second file displays the new settings.

Reloading Files

Menu bar > View > Reload file
Keyboard > CTRL+F5

Files can be reloaded to display the most recent view of scenes. For example, if the import settings have been modified for a particular file format.

Note: Once you have selected import properties for a particular file format, those settings are applied to any file of the same format when it is opened or reloaded.

Procedure

To reload a file, do one of the following:

- Choose **View > Reload File** on the menu bar.
- Press CTRL+F5 on your keyboard.

Copyright © Right Hemisphere 2006. All Rights Reserved.

Saving Files

Menu bar > File > Save
Menu bar > File > Save As > Settings
Standard toolbar > Save As > Settings

You can save (export/convert) 2D and 3D files to a myriad of supported file formats. Various settings can be established when saving files depending on the type of file in which you select to save (the output format).

When you begin saving a file, a 'save' dialog appears and if the file contains export properties, you can modify those properties and apply them to the file. For example, if you save a file to the .jpeg format, you can determine the quality of the saved file. If you save a file to the .rh format, you can save keyframe animation, normals, skins, and smoothing. Once you have modified the export properties for a particular file format, those settings are applied to any file of the same format when it is saved.

The 'save' dialog tabs and options differ depending on the selected output format. However, many tabs and options are identical across different file formats. The shared settings are described in the individual tab topics (Animation (on page 57), Geometry Transform (on page 57), Materials (on page 59), and Texture Maps (on page 59)). Any unique settings are described in the file format topics located within the appendices. You can also access the Export Options dialog for each file format via the Plugin Manager (on page 153).

Note: Certain settings can be saved within .rh version 4.0 files (on page 478) including viewport layouts (on page 61) and layers (on page 139).

You can also publish files (on page 156) to HTML using various templates and then view them in detail in your browser.

Note that while the 'save' dialog is used to save to most file formats, the Vector Illustration tool (on page 135) can be used to save files to a number of additional formats including .cgm, .dxf, and .swf.

Please see the appendices for information on all supported file formats.

Procedures

To save a file in the same format:

1. Open and modify the file as you require.
2. Choose **File > Save** on the menu bar.

To save a file to a different format:

1. Open and modify the file as you require.
2. Do one of the following:
   - Choose **File > Save As** on the menu bar.
   - Click **Save As** on the Standard toolbar.
3. Browse for the directory where you want to save the file.
4. Enter a name for the file.
5. Select the format in which you want to save the file.
6. Select the types of objects that you want to save.
7. Do one of the following:
   - Click **Settings**, modify the properties as required, click **OK**, and then click **Save**.
   - Click **Save**.

General Tab

Menu bar > File menu > Save As > General tab
Standard toolbar > Save As > General tab

The General tab is used to define the export properties for the selected file format.

The tabs and the options displayed when exporting a file differ depending on the selected file format. However, many tabs and options are identical across different file formats. The common settings are described here. Any unique settings are described in the individual file format topics located within the appendices.

Please see the appendices for information on all supported file formats.

Animation Tab

Export Options dialog > General tab > Animation tab

The Animation tab is used to define the animation export properties for the selected file format.

Please see the appendices for information on all supported file formats.

Interface

Export animation—Saves the animation to file.

Rescale animation—Used to establish the length of the animation.

- **Set animation length to**—The length of the animation in seconds.
- **Change animation to**—Scales the animation length relatively.

Reverse animation sequence—Reverses the animation sequence from moving forward to backward.

Remove redundant keys—Removes duplicate animation keys from the exported file. The exported animation plays with the same or similar behavior, but with much fewer keys.

Geometry Transform Tab

Export Options dialog > General tab > Geometry Transform tab

The Geometry Transform tab defines the scene transformation matrix that is used to rotate the current scene. It is used to rotate the scene in the X,Y and Z axes. For example, the following examples show a scene rotated to 0, 0, 0 degrees, and to 90, 0, 180 degrees.

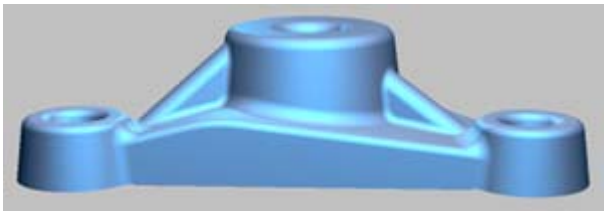

Rotation values 0,0,0

Copyright © Right Hemisphere 2006. All Rights Reserved.

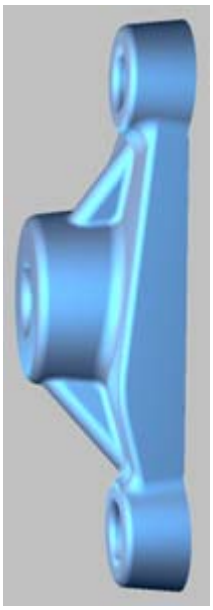

Rotation values 90,0,180

Please see the appendices for information on all supported file formats.

Interface

Enable pre-save transformation—Saves transformed scenes. Otherwise, the scene is saved without transformation.

Scaling—Used to establish the method and amount by which to scale the scene along the X, Y, and Z axes.

- **Actual scene size**—Saves the scene at it's original size.
- **X**—Scales the scene along the X axis.
- **Y**—Scales the scene along the Y axis.
- **Z**—Scales the scene along the Z axis.
- **Fit to**—Fits the scene to the specified scene unit along each axis.
- **Percent**—The percentage by which to scale the scene along each axis.
- **Scale factor**—Multiplies the scene's scale by the specified coefficient along each axis. All three scale factors must be non-zero.
- **Divide by**—Divide by coefficient.
- Divides the scene's scale by the specified coefficient along each axis. All three scale factors must be non-zero.
- **Keep proportions**—Scales the scene along each axis proportionally.

Rotation—Used to establish the scene's degree of rotation around the X, Y and Z axes. If all the values are set to 0, there is no rotation.

- **X**—Rotates the scene along the X axis.
- **Y**—Rotates the scene along the Y axis.
- **Z**—Rotates the scene along the Z axis.

Position—Used to establish the position of the scene along the X, Y and Z axes. If all the values are set to 0, there is no movement.

- **X**—Positions the scene along the X axis.
- **Y**—Positions the scene along the Y axis.

- **Z**—Positions the scene along the Z axis.

Center object—Centralizes the object. Otherwise, the scene is centralized. The object or scene is shifted so that the center of it's bounding box coincides with the origin of the world axis.

Materials Tab

Export Options dialog > General tab > Materials tab

The Materials tab is used to define the material export properties for the selected file format.

Please see the appendices for information on all supported file formats.

Interface

Change all materials before export—Activates the file's material property fields and applies the settings when the file is saved.

- **Substitute color of textured material**—If a diffuse texture is present, the diffuse color is set to the selected color.
- **Set ambient color to**—Applies the selected color as the ambient color. Ambient light is the general light that illuminates the entire scene. It has uniform intensity and is uniformly diffuse. It has no discernible source and no discernible direction.
  - **Or scale by**—Multiplies the ambient color by the specified value.
- **Set diffuse color to**—Applies the selected color as the diffuse color. Diffuse color describes how a material reflects diffuse light in a scene. Because most scenes contain much more diffuse light than ambient light, diffuse reflection plays the largest part in determining overall color. Additionally, because diffuse light is directional, the angle of incidence for diffuse light affects the overall intensity of the reflection. Diffuse reflection is greatest when the light strikes a vertex parallel to that vertex normal. As the angle of reflection increases, the effect of diffuse reflection diminishes. The amount of light reflected is the cosine of the angle between the incoming light and the vertex normal.
  - **Or scale by**—Multiplies the diffuse color by the specified value.
- **Set specular color to**—Applies the selected color as the specular color. Specular reflection creates highlights on objects, making them appear shiny. You establish the color of the specular highlights by setting this color.
  - **Or scale by**—Multiplies the specular color by the specified value.
- **Set emissive color to**—Applies the selected color as the emissive color. This parameter models "glowing" objects. This can be useful for displaying pre-lit models (where the light energy of the room is computed explicitly), or for displaying scientific data.
  - **Or scale by**—Multiplies the emissive color by the specified value.
- **Set opacity of all transparent objects to**—If the material opacity is less than 1, the opacity value is replaced by the specified value.
- **Set glossiness to**—Changes the material's glossiness to the specified value.

Texture Maps Tab

Export Options dialog > General tab > Texture Maps tab

The Texture Maps tab is used to define the export properties for the selected file format's textures.

Please see the appendices for information on all supported file formats.

Copyright © Right Hemisphere 2006. All Rights Reserved.

Interface

Save textures—Saves textures either as separate files or within the 3D file depending on your selection in the 'Include textures to 3D file' field.

Incorporate textures to 3D file—Saves textures within the 3D file.

Convert textures to—Used to select the format in which to export the textures.

- **Settings**—Opens the Export Properties dialog for the selected format and is used to establish settings for the texture files.

Overwrite existing—Used to select the action if the texture map being exported already exists in the destination folder.

- **Replace—**Overwrites the existing map.
- **Ask—**Opens a confirmation dialog when a map already exists and decide your action.
- **Skip—**Retains the existing map.

Scale textures—Resizes large textures so that the longest edge of each texture file is the specified length.

- **Maximum edge length**—The length of each texture file's longest edge.

Store links to existing images of following types—Saves links from the 3D file to the selected textures. This option is only available if you choose to save textures as separate files.

- **Store links to all existing pictures**—Saves links from the 3D file to all textures.

Include existing images of types—Saves the selected textures within the 3D file. This option is only available if you choose to save textures within the 3D file.

- **Include all existing images**—Saves all textures within the 3D file.

Convert all texture file extensions to—Converts the extensions of all texture files to the specified extension. This option is only available if you choose to save textures as separate files.

Copy textures to folder—Copies the textures to the specified folder. This option is only available if you choose to save textures as separate files.

- **Browse**—Used to browse for and select the folder in which to save the textures.

Prefix—The prefix to append to the new texture file names. This is helpful in identifying any new maps that are created. This option is only available if you choose to save textures as separate files.

Viewing Scenes

Scenes can be viewed in myriad different ways using various tools. In this section we discuss viewing the same scene in multiple viewports, using preset or user-defined views, displaying true perspective, orthographic and isometric views, applying various render and lighting modes, displaying the viewport across your monitor, and using the viewport grid.

You can also:

- Rotating, scaling, and panning (on page 62) scene contents.
- Defining the scene element colors (on page 78). For example, the background, bounding boxes, lines and vertices, grid cells, default materials, and individual axes.
- Setting the render method for selected objects (on page 225).
- Applying viewport degradation (on page 225).
- Focusing the camera (on page 317) on all visible and hidden objects.

See also Options Dialog (on page 224) and Viewport Right-Click Menus (on page 316).

Using Viewports

Menu bar > View menu > Viewports

Deep Exploration's workspace (on page 240) comprises one or more viewports that are used to view and modify files; one viewport for 2D files and up to four viewports for 3D files, from where different views of the same scene are can be displayed. For example, one viewport might display an orthographic view of the model from the top and another might display an isometric view in perspective.

Multiple viewports can be helpful when aligning scene components as you can gain an immediate understanding of the entire model from all views. They are also useful when working with animation; they help to speed up the time taken to create animations and new assemblies.

A viewport label is displayed in the upper, left corner of each 3D viewport showing the current view for each viewport, whether transparency and textures (maps) are being displayed, and the angle of object rotation while they are rotated. Note that you can override many settings for the individual viewports using the Display menu (on page 208).

Various right-click menus (on page 315) are available depending on the current file type and where the cursor is positioned. For example, if the current file is a 3D scene and you right-click over the viewport label, you can select a render method in which to view the scene. If you right-click with one or more objects selected in that scene, you can zoom into the viewport to focus on the selected objects.

Functionality

Viewports function in the following manner:

- When you first open Deep Exploration, a single viewport is displayed.
- 2D images are always displayed in a default layout.
- There can be up to four viewports for 3D files; each can be used modify the current file.
- Viewports can be displayed in a variety of layouts. For example, two viewports can be stacked one on top of the other, four viewports side by side.
- Once a viewport layout is selected, it is used when opening subsequent files.
- If you close and reopen Deep Exploration, the last layout used is retained.
- Only one viewport can be active (selected) at a time.
- Certain viewport functions are scene independent. That is, they can be performed on individual viewports:

Copyright © Right Hemisphere 2006. All Rights Reserved.

  - You can display a different view (on page 72) in each viewport.
  - You can display a different render mode (on page 68) in each viewport.
  - You can display different elements (on page 78) in each viewport. For example, the scene bounding box, cameras and lights, back-facing geometry, bones, and markups.
- When rendering to the viewport (on page 212) with multiple viewports displayed, only the active viewport displays the rendered scene. If you resize the viewports, the render changes back to the 3D scene.
- F12 switches between the single viewport layout and the most recently selected multiple viewport layout.

Procedures

To select a viewport layout:

Choose **Views > Viewports** from the menu bar and then click the layout you want.

To switch between single and multiple viewport layouts:

Press F12.

Navigating the Viewports

Menu bar > View > Controls and Toolbars > Navigation
Right-click menu bar > Navigation
Customize Layout dialog > Toolbars tab > Select Navigation > OK

The 2D and 3D viewports can be navigated in a number of different ways including:

- Rotating models.
- Rolling the camera.
- Scaling models up and down.
- Panning images and scenes.
- Viewing scenes from different angles.
- Zooming in on, and out from the scene.
- Displaying the scene as it best fits within the viewport.
- Displaying 2D images in their standard view - their actual size.
- Displaying 3D scenes in their standard camera view (on page 72).

Keyboard shortcuts are available for many of the 2D (on page 356) and 3D (on page 357) navigation tools.

Note: Objects and pivot points can also be transformed (on page 90).

Pan Tool

Navigation toolbar > Pan tool > Drag image or model in viewport
Keyboard > P+drag model in viewport
Keyboard > LEFT ARROW
Keyboard > RIGHT ARROW
Left+right-click / middle-click > Drag in viewport

The Pan tool  is used to pan images and scenes in the 3D viewport. That is, the camera is rotated camera around a vertical axis. You can also use the arrow keys to view scenes from different angles. That is, move the camera laterally or vertically.

Note that regardless of the selected navigation mode, pressing P and dragging in the viewport pans the scene; pressing the LEFT and RIGHT ARROWS pans the scene; left+right-clicking or middle-clicking and dragging in the viewport views the scene from a different angle; right-clicking and dragging in the viewport scales the scene; pressing the UP and DOWN ARROWS trucks the scene.

Procedures

To pan an image or scene:

1. Select the 2D or 3D viewport.
2. Do one of the following:
   - Click **Pan**  on the Navigation toolbar and drag the image or scene around the viewport.
   - Press P on the keyboard and drag the image or scene around the viewport.
   - Hold down the LEFT or RIGHT ARROW.

The camera is rotated around the vertical axis.

To views a scene from a different angle:

1. Select the 3D viewport.
2. Left+right-click or middle-click and drag the image or scene around the viewport.

The camera is moved laterally or vertically.

Rotate Tool

Navigation toolbar > Rotate > Drag model in viewport
Navigation toolbar > Rotate > SHIFT+drag model in viewport
Keyboard > R+drag model in viewport

The Rotate tool  is used to rotate models and roll the camera in the 3D viewport. When you rotate a model, the camera moves around a point of rotation (focal point) to orbit the scene. The focal point is the center of the scene by default; however, you can change the focal point by panning, scaling, and zooming the scene. When you roll the camera, it is moved around the viewing axis.

A label is displayed in the upper, left corner of each 3D viewport showing the angle of object rotation as they are being rotated.

Note that regardless of the selected navigation mode, pressing R and dragging in the viewport rotates the model; left+right-clicking or middle-clicking and then dragging in the viewport views the scene from a different angle; pressing the LEFT and RIGHT ARROWS pans the scene; right-clicking and dragging in the viewport scales the scene; pressing the UP and DOWN ARROWS trucks the scene.

Copyright © Right Hemisphere 2006. All Rights Reserved.

Procedures

To rotate a model:

1. Select the 3D viewport.
2. Do one of the following:
   - Click **Rotate**  on the Navigation toolbar and drag the model around the viewport.
   - Press R on the keyboard and drag the model around the viewport.

The camera moves around the focal point and the model is rotated.

To roll the camera:

1. Select the 3D viewport.
2. Click **Rotate**  on the Navigation toolbar.
3. Press SHIFT and drag the model around the viewport.

The camera is moved around the viewing axis.

Scale Tool

Navigation toolbar > Scale tool > Drag model in viewport
Navigation toolbar > Scale tool > Rotate IntelliMouse wheel
Right-click > Drag in viewport
Keyboard > UP/DOWN ARROWS

The Scale tool  is used to scale models up or down in the 3D viewport, similar to using the zoom tools. That is, you can magnify and reduce the magnification of scenes.

You can also use the arrow keys to 'truck' the scene. That is, move the camera into scene to view more closely, or out from scene to view more distantly. When trucking, the focal point is always a fixed distance from the camera.

Note that regardless of the selected navigation mode, right-clicking and dragging in the viewport scales the scene; pressing the UP and DOWN ARROWS trucks the scene; left+right-clicking or middle-clicking and dragging in the viewport views the scene from a different angle; pressing the LEFT and RIGHT ARROWS pans the scene.

Procedures

To scale a scene up:

1. Select the 3D viewport.
2. Click **Scale**  in the Navigation toolbar.
3. Do one of the following:
   - Hold down the mouse button and drag the mouse into the viewport centre.
   - Rotate the IntelliMouse wheel away from you.
   - Right-click, hold down the mouse button and drag the mouse into the viewport centre.

The image is magnified.

To scale a scene down:

1. Select the 3D viewport.
2. Click **Scale**  in the Navigation toolbar.
3. Do one of the following:
   - Hold down the mouse button and drag the mouse out from the viewport centre.
   - Rotate the IntelliMouse wheel toward you.
   - Right-click, hold down the mouse button and drag the mouse out from the viewport centre.

The image magnification is reduced.

To truck into a scene:

Hold down the UP ARROW. The camera moves into the scene.

To truck out from a scene:

Hold down the DOWN ARROW. The camera moves out from the scene.

Zoom Tools

Navigation toolbar > Zoom In
Navigation toolbar > Zoom Out
Navigation toolbar > Zoom Window
Navigation toolbar > Best Fit
Navigation toolbar > Standard View
Keyboard > +
Keyboard > -
Keyboard > *

The zoom tools are used to magnify or reduce the magnification of images and scenes, display them as they best fit within the viewport, and display them in their standard view.

Note that for 2D images, this standard view is the image's actual size. For 3D scenes, it refers to the scene's standard camera view (on page 72).

When you zoom in on a scene, the camera angle (FOV) is narrowed to magnify scene. When you zoom out from a scene, the camera angle is widened to reduce the magnification.

Note that regardless of the selected navigation mode, right-clicking and dragging in the viewport scales the scene; pressing the UP and DOWN ARROWS trucks the scene; pressing P and dragging in the viewport pans the scene; left+right-clicking or middle-clicking and dragging in the viewport views the scene from a different angle; pressing the LEFT and RIGHT ARROWS pans the scene.

Note: The viewport right-click menus (on page 315) can also be used to perform certain zoom functions.

Procedures

To zoom in on an image:

1. Select the 2D viewport.
2. Do one of the following:
   - Click **Zoom In**  in the Navigation toolbar, hold down the mouse button and drag the mouse into the viewport centre.
   - Press PLUS SIGN (+).

Copyright © Right Hemisphere 2006. All Rights Reserved.

The image is magnified.

To zoom in on a scene:

1. Select the 3D viewport.
2. Do one of the following:
   - Click **Zoom Window**  in the Navigation toolbar and drag in the viewport. The selection is magnified to the selection's extents.
   - Click **Zoom In** in the Navigation toolbar, hold down the mouse button and drag the mouse into the viewport centre.
   - Press the PLUS SIGN (+).

The scene is magnified.

To zoom out from images and scenes:

1. Select the 2D or 3D viewport.
2. Do one of the following:
   - Click **Zoom Out**  in the Navigation toolbar, hold down the mouse button and drag the mouse out from the viewport centre.
   - Press the MINUS SIGN (-).

The image or scene magnification is reduced.

To zoom images and scenes to the best fit:

1. Select the 2D or 3D viewport.
2. Do one of the following:
   - Click **Best Fit**  in the Navigation toolbar.
   - Press CTRL and the PLUS SIGN (+).

The entire image or scene is displayed within the viewport.

To zoom images and scenes to their standard view:

1. Select the 2D or 3D viewport.
2. Do one of the following:
   - Click **Standard View**  in the Navigation toolbar.
   - Press the MULTIPLICATION SIGN (*).

The image or scene is displayed in it's standard view in all viewports.

Viewport Layouts

Menu bar > View menu > Viewports > Click layout

Multiple viewports enable you to see models in various layouts. The layout can be changed to arrange the viewports in various ways including resizing the viewport windows (on page 345). When you click a viewport, it becomes active immediately and the viewport frame is highlighted in yellow. Inactive viewport frames are gray.

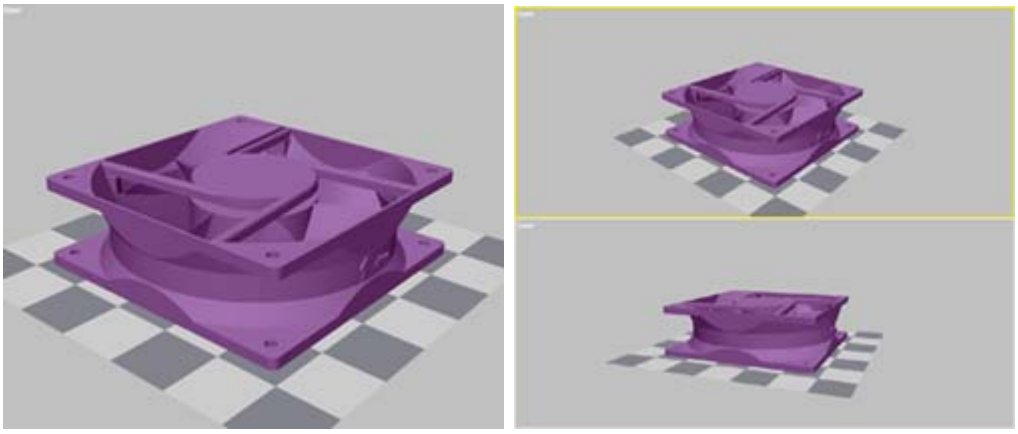

Single view / 2 views stacked

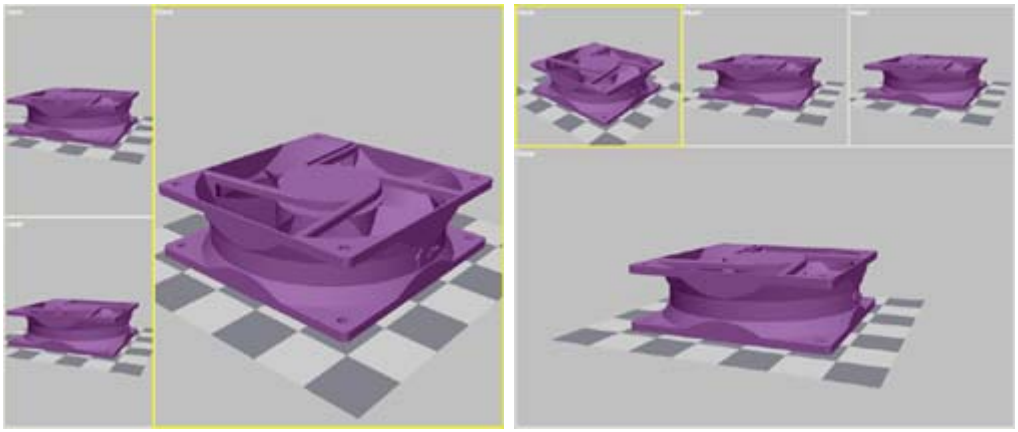

3 views left split / 4 views top split

The active viewport remains so when you change the layout. It is also always either the largest viewport displayed or is displayed at the top, left of the workspace depending on the layout you select.

The viewport layout can be saved within .rh version 4.0 files (on page 478) via the Object Properties dialog (on page 271). When the file is opened again, that layout is displayed automatically regardless of your current layout selection.

Render Modes and Scene Elements

Each viewport can display a different render mode and different scene elements as shown in the example below.

Copyright © Right Hemisphere 2006. All Rights Reserved.

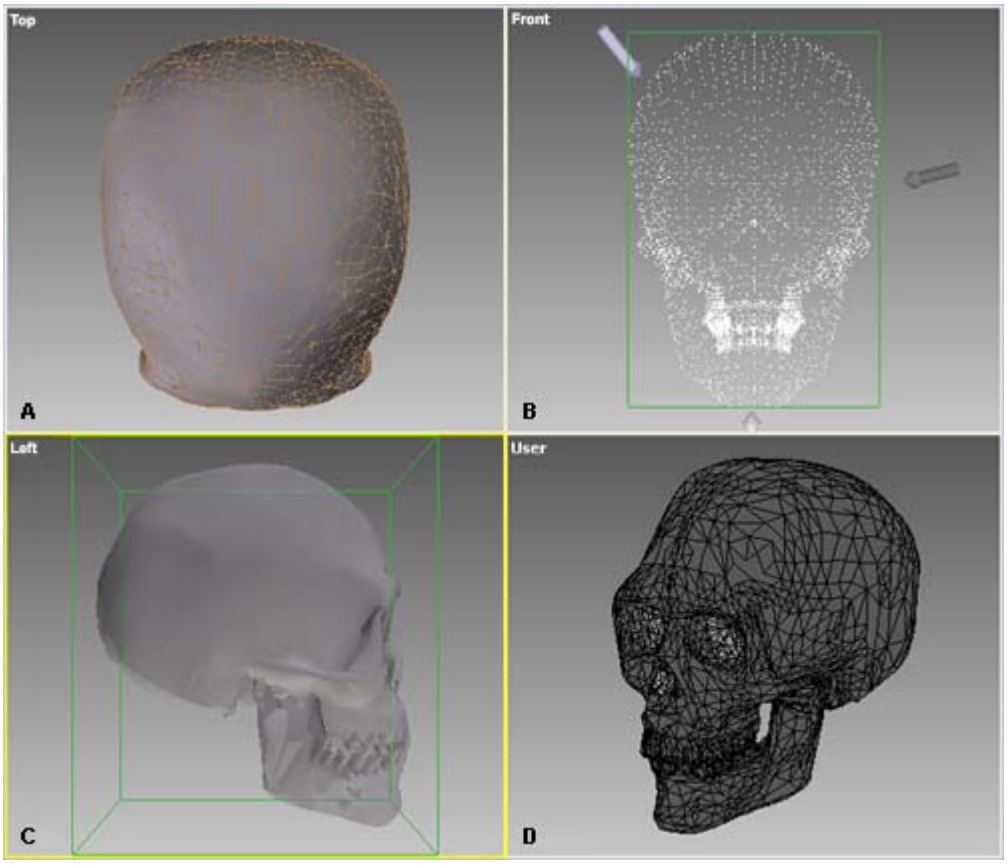

A: Top view, Solid Wireframe mode
B: Front view, Vertices mode, scene bounding box, cameras and lights elements
C: Left view, Solid mode, scene bounding box element
D: User-defined view, Line Illustration mode

The render modes and certain elements can be displayed globally for all viewports or locally in individual viewports depending on the menu from which you select the command. For example, selecting to display the scene bounding box from the Display menu display it in all viewports. Selecting to display the bounding box from a right-click viewport menu, displays it in the selected viewport.

See Render Modes (on page 68) and Scene Elements (on page 78) for further information on global and local viewport display.

Render Modes

Menu bar > Display menu
Menu bar > View > Controls and Toolbars > Display
Right-click menu bar > Display
Customize Layout dialog > Toolbars tab > Select Display > OK

Various render modes can be used to apply preset scene settings that manipulate a number of display elements. Render modes can be applied globally to all viewports or locally to individual viewports depending on the menu from which you select the command as described below.

The render modes are:

- **Transparent Bounding Box—**Displays each object as a transparent bounding box.
- **Solid—**Displays each object as solid.
- **Transparent—**Displays each object as transparent.
- **Solid Wireframe—**Displays each object as solid with a wireframe.
- **Line Illustration—**Displays each object as a solid rendering with outlines overlaid on top.

- **Solid Outline—**Displays each object as solid with outlines. That is, only silhouette and crease edges are shown.
- **Shaded Illustration—**Displays each object as solid with outlines with material color overrides. That is, the objects' material colors can be replaced or blended with other colors using the Display Settings panel.
- **Bounding Box—**Displays each object as a bounding box.
- **Transparent Bounding Box Outline—**Displays each object as a transparent bounding box with outlines along the edges. Each bounding box is axis-aligned (AABB) instead of the object's actual geometry. An AABB is a box with all its edges parallel to the X,Y, and Z axes, and is the smallest box that can completely contain the given object.
- **Transparent Wireframe—**Displays each object as transparent with a wireframe.
- **Wireframe—**Displays each object as a wireframe.
- **Shaded Wireframe—**Displays each object as a shaded wireframe.
- **Hidden Wireframe—**Displays or hides the wireframe view without any visible hidden surfaces. A similar effect can be obtained using Solid Outline mode with the outline angle set to '0'.
- **Vertices—**Displays all objects as vertices.
- **Shaded Vertices—**Displays all objects as shaded vertices. The shading colors are based on the object's material colors.

Many of the render mode settings can be modified using the Display Settings panel (on page 260), and then saved as 'themes' so you can select and apply them quickly.

The render mode colors are based on the global settings established in the Options dialog (on page 228). You can override these colors using the Display Settings panel. For example, you can override the wireframe color in the Wireframe, Shaded Wireframe, and Transparent Wireframe modes.

Below are some examples of the render modes. The last example shows the model rendered as a 'blueprint'; in Line Illustration mode with modified settings of a dark blue background and white lines.

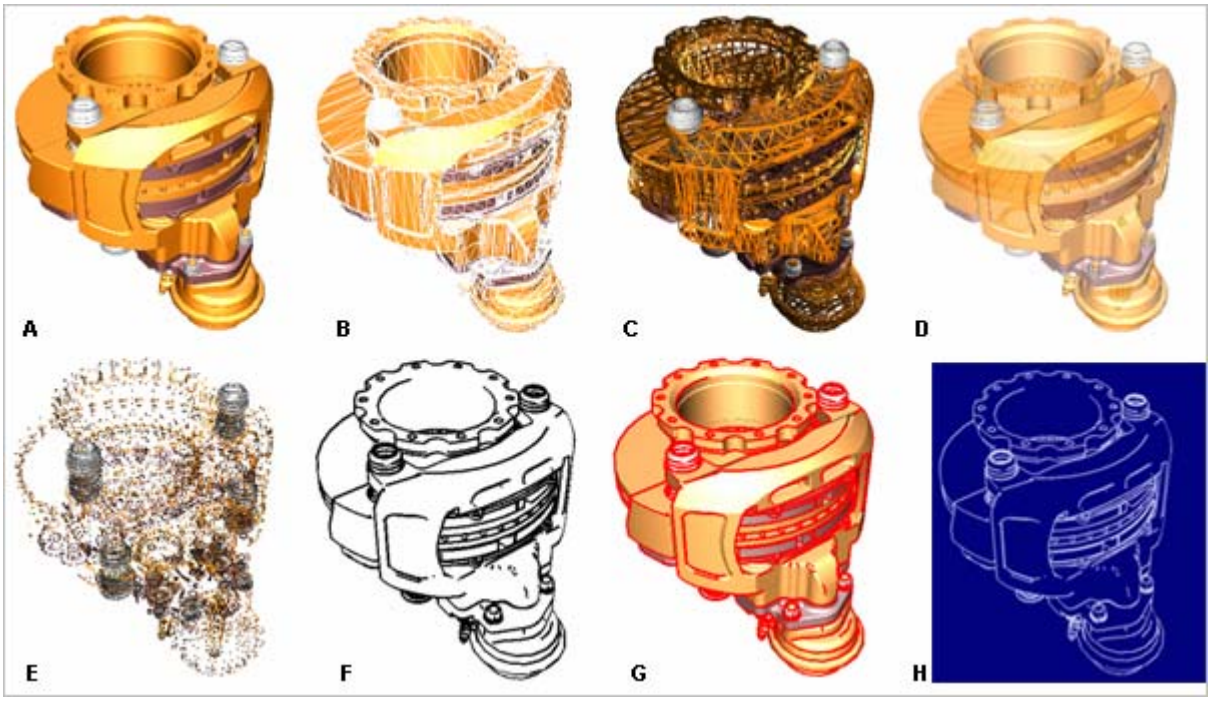

Copyright © Right Hemisphere 2006. All Rights Reserved.

A: Solid
B: Solid Wireframe
C: Shaded Wireframe
D: Transparent
E: Shaded Vertices
F: Line Illustration
G: Shaded Illustration
H: Blueprint (Line Illustration with modified settings)

Various shortcuts (on page 358) are available from where to apply certain render modes. See also Display menu (on page 208) and Display toolbar (on page 298).

Note: The term 'wireframe' indicates that all polygon edges are shown, and the term 'outline' indicates only silhouette and crease edges are displayed. The colors of lines and vertices may be based on the object or the object's material. They can also be modified using the Options dialog or the Scene Properties dialog (on page 270).

Procedures

To apply a global render mode, do one of the following:

- Choose **Display** on the menu bar, and then click the button for the mode you want to apply.
- Click the button on the Display toolbar for the mode you want to apply.

To apply a local render mode:

1. Right-click the label for the viewport you want to modify.
2. Click the button for the mode you want to apply to the viewport.

Lighting Modes

Menu bar > Display menu > Lights
Menu bar > View > Controls and Toolbars > Lights
Right-click menu bar > Lights
Customize Layout dialog > Toolbars tab > Select Lights > OK

Various lighting modes can be used to apply preset light settings for the display of the scene's lights, which imitate different kinds of real-world light sources such as the sun, office lamps, or stage and film lighting. Adding lights gives a more realistic appearance by enhancing the clarity and three-dimensionality of a scene.

A number of light settings can be applied either 'from the file', or by applying one of several lighting presets including colored lights, cube lights, and CAD optimized lights.

Note: The scene's lighting is also affected by the scene's ambient and illumination colors (on page 270).

Below are some examples of the lighting modes.

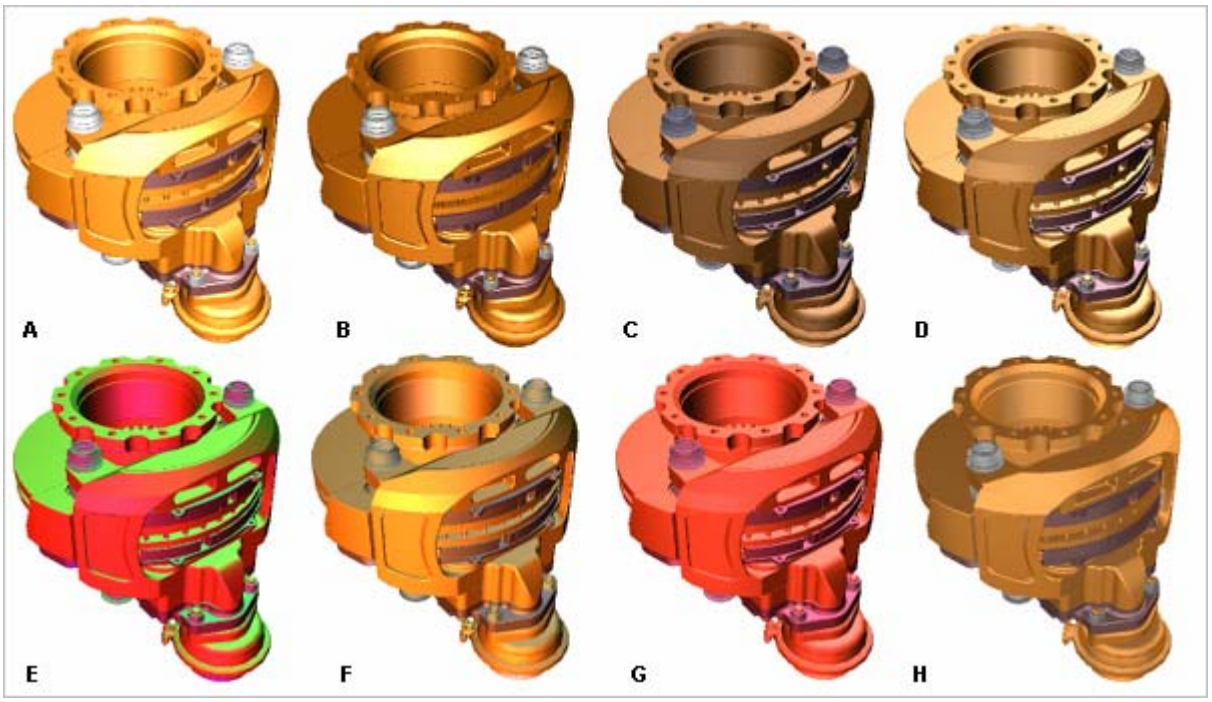

A: CAD Optimized
B: Single Light From Eye
C: White Lights
D: Daylight
E: Colored Lights Red/Green
F: Colored Lights Blue/Green
G: Marsiano Lights
H: Cube Lights

When the 'Lights from file' command is selected, any lights that are visible in the Scene tree are activated and their effects seen in the viewports. This includes any lights loaded from the file, as well as any lights that have since been added to the scene using the 'Create Editable Lights (on page 212)' function. If there are no lights in the Scene tree, then the current preset lighting mode is used. For example, Day Light or CAD Optimized Lights.

Note that as there is always one preset lighting mode selected, selecting the 'Lights from File' command does not clear that preset mode. However, selecting a new preset mode does clear the Lights from File' command, so that the effect of the mode can be seen immediately.

Various shortcuts (on page 362) are available from where to apply certain lighting modes.

See also Display menu (on page 208) and Lights toolbar (on page 299).

Procedures

To apply a lighting mode, do one of the following:

- Choose **Display > Lights** on the menu bar, and then click the button for the preset mode you want to apply.
- Click the button on the Lights toolbar for the preset mode you want to apply.

To apply the Lights from File mode:

1. Do one of the following:
   - Choose **Display > Lights** on the menu bar, and then click the preset mode you want to apply.
   - Click the button on the Lights toolbar for the preset mode you want to apply.
2. Do one of the following:

Copyright © Right Hemisphere 2006. All Rights Reserved.

- Choose **Display > Lights > Lights From File** on the menu bar.
- Click **Lights From File** on the Lights toolbar.

To increase or decrease the lighting brightness:

Views

Views are a way of saving various display-type settings based on the current view of the scene. For example, the camera angle, render mode, and visible objects.

If you are using multiple viewports (on page 61), different views can be used in each viewport. For example, you can display the scene in perspective from the top, as 27 Isometric RBA in one viewport, with a model view applied in another viewport, and with a view from the top in yet another. The viewport label displays the current view in each viewport.

There are multiple ways of saving views; each method has its own role to play when working with 3D scenes:

- Preset and user-defined camera views can be used to display scenes through various camera angles (viewpoints).
- Model views are based on the current view of the scene and emulate the properties of schematic diagrams found in various types of manuals. For example, training and reference manuals.

Different steps (on page 164) can also be displayed in individual viewports. Steps emulate sequences of arbitrary text. For example, assembly and disassembly 3D-view instructions in PDF files.

Camera Views

Right-click viewport label
Right-click viewport label > Views

Various preset and user-defined camera views can be used to display scenes including displaying scenes in perspective and through orthographic and isometric viewpoints.

User-defined views can be created either by defining the views in the views.xml file located in Deep Exploration's root installation folder, or by creating camera objects and then selecting to view the scene through the camera. You can also set any camera view for the current file format - called the 'standard view'. Then, whenever you open a file of the same format, the standard view is displayed.

Note: A sample views.xml is delivered with Deep Exploration and can be used as a template to define your custom views.

If you are using multiple viewports (on page 61), different views can be used in each viewport. For example, you can display a perspective view from the top in one viewport, a 27 Isometric RBA view in another, and a model view in yet another. The viewport label displays the current view in each viewport.

Procedures

To select a view:

1. Right-click the label for the viewport you want to modify.
2. Do one of the following:
   - Click the preset view you want.
   - Choose **Views** and click the preset or user-defined view you want.

3. Right-click the viewport label again and click **Perspective** if you want to display the scene receding into the distance.

To set the current view as 'standard' for files of the current type:

1. Right-click the viewport label.
2. Choose **Views > Set** Current View as **Standard for [format]**.

To remove the standard view for files of the current type:

1. Right-click the viewport label.
2. Choose **Views > Erase Standard View for [format]**.

To remove the standard view for all file types:

1. Right-click the viewport label.
2. Choose **Views > Erase Standard View for All Files**.

Preset Views

Right-click viewport label > Top/Bottom/Aft/Front/Right/Left/User
Right-click viewport label > Perspective
Right-click viewport label > Views > Click view

A number of different preset camera views can be used to display scenes in the selected viewport:

- **Top/Bottom/Aft/Right/Left** (on page 316): Orthographic views that display the scene from the selected viewpoint. Orthographic views are a type of parallel projection used for drawing engineering blueprints and is used for accurate description of objects and their positioning. Most 3D design relies on 2D representations or 'orthographic' views, for example, maps, plans, cross-sections, and elevations. In familiar terms, you might think of these views as 'flat' or 'straight-on', or as 'looking at right angles'. Orthographic views are two-dimensional, each defined by two world coordinate axes. Combinations of these axes produce three pairs of orthographic views: top and bottom; front and back; left and right.
- **User** (on page 73): This is the default user view and is only displayed when the camera is not at a preset view or a view defined in the views.xml. That is, if the current view is a model view or as soon as you rotate the model (on page 63), this label is displayed in the viewport.
- **Perspective** (on page 73): Perspective views most closely resemble human vision. Objects appear to recede into the distance, creating a sense of depth and space. For most 3D computer graphics, this is the view used in the final output that the client sees onscreen or on the page. This is used when an isometric is not suitable. Perspective projections are also used for location drawings.
- **Model Views** (on page 75): Various user-defined model views in which to display the scene in the selected viewport.
- **Views** (on page 317): Displays all user-defined views and various preset views including isometric, dimetric, and trimetric.
    - **Isometric**: These views have three surfaces equally foreshortened and is the most frequently used projection. It is the simplest to understand because it is based on equals and parallels. Isometric views should be viewed without perspective.
    - **Dimetric**: A dimetric view has two of the three surfaces equally foreshortened.
    - **Trimetric**: Trimetric views have all three surfaces foreshortened by a difference ratio and can be used as an alternative when an isometric view is not suitable.

These views are accessed via the right-click viewport menus (on page 316). Keyboard shortcuts (on page 368) are available for many of the preset views.

Copyright © Right Hemisphere 2006. All Rights Reserved.

Viewpoints

The isometric, dimetric and trimetric menus display the following commands from which to choose a viewpoint:

- **LTF—**View the model with the selected viewpoint from the left, top, front of the scene.
- **LTA—**View the model with the selected viewpoint from the left, top, aft (back) of the scene.
- **RTA—**View the model with the selected viewpoint from the right, top, aft of the scene.
- **RTF—**View the model with the selected viewpoint from the right, top, front of the scene.
- **LBF—**View the model with the selected viewpoint from the left, bottom, front of the scene.
- **LBA—**View the model with the selected viewpoint from the left, bottom, aft of the scene.
- **RBA—**View the model with the selected viewpoint from the right, bottom, aft of the scene.
- **RBF—**View the model with the selected viewpoint from the right, bottom, front of the scene.

User-Defined Views

Right-click viewport label > View > Click view
3D Objects list > Right-click camera object > Activate Camera
Right-click viewport label > View > Set Current View as Default for format

User-defined views can be created either by creating camera objects or by defining the views in the 'views.xml' file. You can then activate the view in which you want to display the current scene.

You can also set and remove the current view as the default for the current file type, and you can remove the default file type views from all file types. For example, you can set .3ds files to always display an orthographic view from the bottom. You can also erase the default camera for the current file type or for all files.

- **Camera object views**: These views control the camera's position and angle. Cameras are created using the Create menu (on page 212) and can be modified as you would modify other 3D objects. They are activated via the 3D Objects list or the Views menu (on page 317).
- **Views.xml file**: Views created using the views.xml file are non-positional. That is, they only control the angle of the camera. They are activated via the Views menu (on page 317). Note that this file must be located in Deep Exploration's root installation folder for the views to be visible in the Views menu. The angle coordinates can be seen in the Information tab (on page 280) of the camera Object Properties dialog. For example, View X="88.1769", Y="11.2053", Z="-162.588".

Note: When navigating the viewport (on page 62), the default user view (on page 316) is used to view the scene. However, if you navigate the viewport with a camera object view activated and Edit Keyframes (on page 295) selected, the camera object view remains active and the camera moves about the scene.

Procedures

To create a camera object view:

1. Modify the scene view as you require.
2. Do one of the following:
   - Choose **Create > Camera** from the menu bar.
   - Choose **Create > Target Camera** from the menu bar.

To activate a camera object view, do one of the following:

- In the 3D Objects list, right-click the camera object you require, and then click **Activate Camera**
  
  .

- Right-click the viewport label, choose **Views**, and then click the camera view you want.

Model Views

Menu bar > View > Controls and Toolbars > Model Views
Right-click menu bar > Model Views
Customize Layout dialog > Controls tab > Select Model Views > OK

You can create user-defined views that are based on the current view of the scene. These are called 'model views' and they emulate the properties of schematic diagrams found in various types of manuals. For example, training and reference manuals. Each model view associates the current camera position, render mode, and layer. The associated layer comprises all of the currently visible objects including callouts.

When you create a model view, the view is created immediately with all settings from the current scene (lighting, visibility, etc.) and all the default settings (layer, camera position, active display settings). The view and view's properties (on page 265) are displayed and can be modified via the Model Views panel (on page 264).

Any model views that you create can be saved within the file when saving to the .rh version 4.0 file format (on page 478).

When you select a model view:

- The active viewport is set to the associated camera render mode.
- The objects in the associated layer are made visible.
- All objects that are not associated with the view become invisible.

All viewports display the select model view's object visibility; you cannot display differing model views in separate viewports.

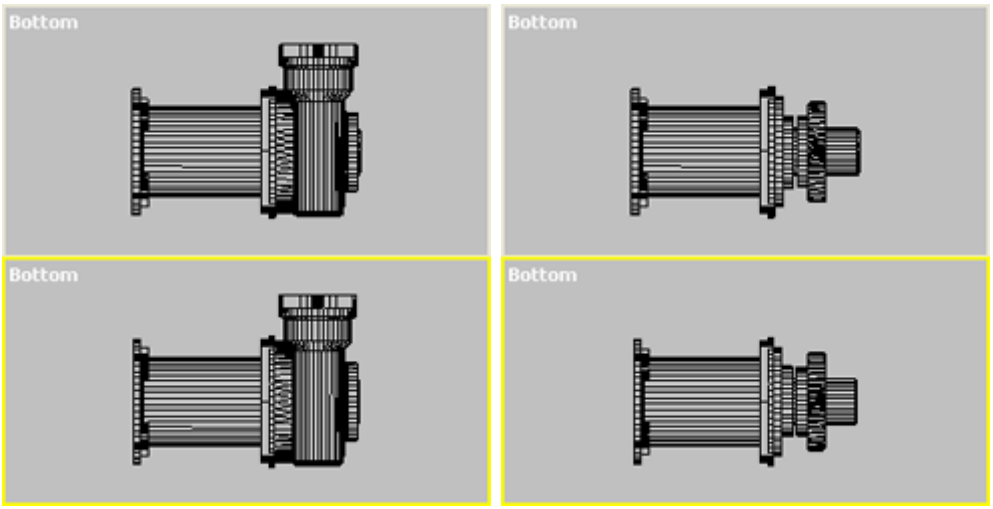

Multiple viewports: Model view with all objects displayed / Model view with some objects hidden

The Model Views panel is used to create, activate, and delete model views. You can also edit the model view names, modify their properties, and switch between a thumbnail and regular display of the views list.

If you are using multiple viewports (on page 61), different views can be used in each viewport. For example, you can display a model view in one viewport, a 27 Isometric RBA view in another, and a perspective view from the top in yet another. The viewport label displays the current view in each viewport.

Copyright © Right Hemisphere 2006. All Rights Reserved.

Note that whenever a Teamwork markup (on page 167) is added to a scene, a model view is created based on the current view.

Note: Model views cannot be modified. However, you can delete them and create new model views easily.

Procedures

To create a model view:

1. Modify the scene view as you require.
2. Open the Model Views panel (on page 264).
2. Click **Create** .

To edit a model view:

1. Right-click the view you want to edit in the Model Views panel, and then click **Properties**.
2. Edit the view as required and click **OK**.

To delete a model view, do one of the following:

- Click **Delete**  in the Model Views panel.
- Right-click the view you want to delete in the Model Views panel, and then click **Delete**.

To view a model view's properties:

1. Select the view for which you want to view the properties in the Model Views panel.
2. Click **Properties** .

To activate a model view, do one of the following:

- Select the view in the Model Views panel, and then click **Activate** in the Model Views panel.
- Double-click the view in the Model Views panel.
- In the Model Views panel, right-click the view you want and click **Activate**.
- Right-click the viewport label, choose **Views** and click the view you want.

To switch between a thumbnail and a detailed view:

Click **Thumbnails**  on the Model Views panel. If the list was displayed in a detailed view, thumbnails are displayed. If the list was displayed as thumbnails, a detailed view is displayed.

Display Modes

Menu bar > View menu > Full-Screen Mode
Standard toolbar > Full-Screen Mode
Keyboard > F11

Two display modes can be used to view either the entire application or the entire viewport across your monitor.

When in Full-screen display mode, you can view the current toolbars and panels by moving your cursor to the very top, bottom, left, and right edges of the monitor.

You can also use command line arguments (on page 352) to display Deep Exploration in either Standard or Full-screen display mode whenever it is opened.

Procedures

To switch to Full-screen display mode, do one of the following:

- Choose **View > Full-Screen Mode** on the menu bar in Standard display mode.
- Click **Full-screen Mode**  on the Standard toolbar in Standard display mode.
- Press F11 on your keyboard in Standard display mode.

To switch to Standard display mode:

- Press F11 on your keyboard in Full-screen display mode.
- Press ESC on your keyboard in Full-screen display mode.

Coordinate Systems

3D Editor toolbar > Local
3D Editor toolbar > Parent
3D Editor toolbar > World
Right-click scene > World Coordinate System
Right-click scene > Screen Coordinate System

In 3D graphics, a coordinate system is a method by which points are represented in space. As their origins are in different places and their axes are aligned differently, each system has its own uses.

The 3D Editor movement, rotation, and scaling tools are based on the system selected via the 3D Editor toolbar (on page 295). The camera movement is based on the system selected via the right-click scene menu (on page 318).

Note: Clicking the buttons on the toolbar cycles through the coordinate systems.

Local Coordinate System

The local coordinate system is the coordinate system that relates specifically to the selected object. Each object has its own local center and coordinate system as defined by the location and orientation of the object's pivot point. The local center and coordinate system of an object combine to define its object space. The direction of the object's X, Y, and Z axes depend on the current transforms of the object. In contrast with the world coordinate system.

So, we can say that the position of the object is actually the position of the local origin.

Copyright © Right Hemisphere 2006. All Rights Reserved.

You can see the difference between the two coordinate systems when you unintentionally rotate an object, such as the wheel on a car, around the world axis instead of the object's local axis. The wheel immediately flies off in a large arc because the center of the rotation is at the origin of the world coordinates. To rotate the wheel correctly, the local coordinate system should be used. The wheel then rotates around its own hub, which is the origin of its local coordinates.

Note that vertices are defined in the local coordinate system. Non-uniform scale is possible in the Local system only.

Parent Coordinate System

The parent coordinate system is based on hierarchical relationships; child objects using the parent coordinate system are actually using the parent's local coordinate system.

Objects at the top level of the hierarchy are considered to be children of the scene itself, so in this case the parent coordinates equal the world coordinates.

This system is mostly relevant when using the rotation tool.

World Coordinate System

The world coordinate system forms the 'base' on which you can think of all other coordinates being defined. Usually, its origin is at the center of the scene, and its axes might be aligned with directions like north/south, east/west, and up/down. For example, it is very common for the X axis to be east, the Y axis to be north, and the Z axis to be up. This is the coordinate system in which most of the level geometry is defined.

World space is the universal coordinate system that the software uses to track objects in the scene. World space is constant and immovable. In the world coordinate system seen from the front, the X axis runs in a positive direction to the right, the Z axis runs in a positive direction upward, and the Y axis runs in a positive direction away from you.

Note that selecting the world system in the 3D Editor toolbar affects the 3D Editor tools; selecting the world system in the right-click scene menu controls the camera movement.

Screen Coordinate System

The screen coordinate system is aligned to the viewport and is the system upon which the near and far clipping planes (on page 276) are based. This command controls the camera movement along the axes when aligned with the viewport.

Scene Elements

Scenes can comprise and display numerous elements such as bones, scene and object bounding boxes, faces, shadows, surface normals, the scene grid, materials, and meshes. Many of these elements are defined as 'object elements'. For example, bones, faces, materials, meshes, vertices, edges, and faces.

Elements may be contained within the file itself, or may be added to scenes via Deep Exploration. For example, you can add a cross section plane, cameras, and lights to scenes via the application.

Certain elements can be displayed globally for all viewports or locally in individual viewports, depending on the menu from which you select the command as described below.

Element Colors

You can modify the colors of scene elements. For example, you can display the bounding box in green and the X axis in red.

The elements can then be made visible via the render modes (on page 68), the Display menu (on page 208) and the Display toolbar (on page 298). Please note that you must also select the related check boxes on the 3D View tab for your color settings to be visible for the object-type elements. For example, the object bounding box, vertices, wireframe, object axes, and surface normals settings.

Changing the color of an element affects all file formats. The default element colors can be restored at any time. Note that colors can only be changed for elements that have been enabled in the original images or model.

The default material setting (on page 230) can also be modified, including the glossiness, specular, and opacity levels.

Element Properties

If an element is also defined as an object, the properties of that object can be modified (on page 271). For example, materials and the scene's cross section plane.

Procedures

To display an element globally:

Choose **Display** on the menu bar, and then click the button for the element you want to display.

To display an element locally:

1. Right-click the label for the viewport you want to modify.
2. Click the button for the element you want to display in the viewport.

To change the color of an element:

1. Do one of the following:
   - Open the Options dialog (on page 224) and, on the Colors tab, double-click the colored square for the element you want to modify.
   - Open the Scene Properties dialog (on page 270) and, on the Advanced tab, click the row down arrow for the element you want to modify.
2. Select the color you require and click **OK** twice.

To restore the default color settings:

Open the Options dialog and, on the Colors tab, click the **Reset** button.

Normals

A flat polygon situated in 3D coordinate space necessarily has an orientation; it faces a unique direction. An imaginary ray pointing out from the surface of the polygon, and perpendicular to that surface, is called the 'normal' of the polygon.

As there will always be two normals, one on each side of the surface, and pointing in opposing directions, the choice of the side from which the normal projects defines the front or 'face' of the polygon. In 3D computer graphics, as opposed to the physical world, it is usual for a polygon to have only one face or side, and therefore only one normal. This is because polygons are typically used to create a closed mesh representing the surface of a 3D object and the back side of the polygon is therefore hidden inside the object.

Copyright © Right Hemisphere 2006. All Rights Reserved.

To save render time, polygons are kept single-sided and the normal projects from only the exposed face. However, occasionally it is necessary to create double-sided polygons that have normals pointing from both sides, and which therefore can be rendered from both sides as the different sides come into view during the course of an animation. The face side of a polygon is typically established in a Model file by the order in which the vertices of the polygon are listed, clockwise or counterclockwise around the facing (normal) side.

Normals can be associated not only with the flat surfaces of the polygons, but also with the individual points that make up the vertices where polygons meet on the surface of a model. This technique is used in rendering to create the appearance of curved surfaces rather that flat, faceted sides. Such 'vertex normals' can be directly assigned in the model file, but are usually computed during rendering by averaging the normals of the adjacent polygons.

Viewport Background

Right-click scene menu > Open Background
Right-click scene menu > Background Image

An image can be opened into the scene background to assist with simple compositing of models to create a sense of world orientation, and of the model's scale and position. The use of image backgrounds is well-suited to marketing presentations by giving products a place in the world to inspire the imagination. For example, you could match a 3D model of a car against a landscape in which the car is parked.



Model car / Landscape image / Image added as a background

The image can be scaled to fit the viewport in real-time, and you can tile and center it in the viewport.

A graduated (gradient) can also be selected for the viewport background by selecting top and bottom background colors via the Options (on page 224) or Scene Properties dialogs (on page 270).

Procedures

To open an image into a scene:

1. Right-click the scene and click **Open Background**.
2. Navigate to and select the file you want to open.
3. Click **Open**.

To modify the background image:

1. Right-click the scene and choose **Background Image**.
2. Do one of the following:
   - Click **Stretch** to scale the image to fit the viewport in real-time.
   - Click **Tile** to tile the image in the viewport.
   - Click **Center** to center the image in the viewport.

To clear the background image:

Right-click the scene and choose **Background Image** > **Clear Background**.

Viewport Grid

Menu bar > Display menu > Grid
Display toolbar > Grid

A grid can be displayed in 3D scenes (on page 210) and transparent 2D images (on page 224) to assist with the placement of objects and images and making them easier to distinguish. When displayed in scenes, grids can be thought of as the 'floor'. This can be helpful in creating a sense of model scale, model position, and world orientation. It can be useful for marketing presentations by giving products a place in the world.

You can choose the size of the units that the grid displays. For example, a 1 by 1 unit grid or a 5 by 5 unit grid. The grid cells can be either solid or transparent.

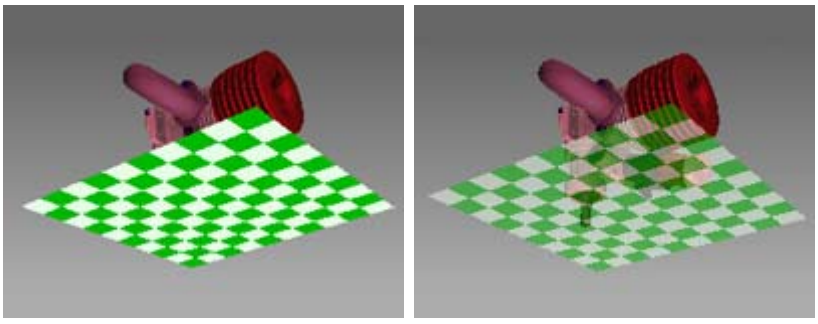

Scene: Solid grid / Transparent grid

In scenes, you can also display a shadow that is projected from the model onto the grid.

Copyright © Right Hemisphere 2006. All Rights Reserved.

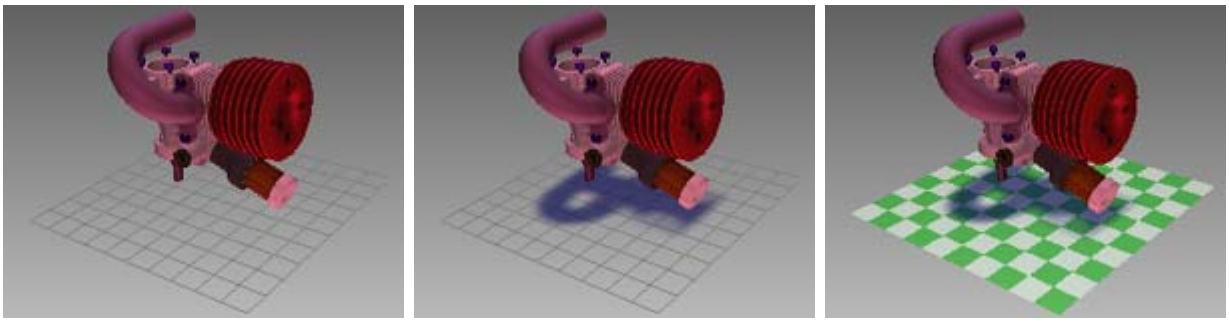

Scene: Wire grid / Wire grid with shadow / Transparent grid with shadow

The shadow's display properties (on page 271) can be modified including the shadow's resolution, edge blur, double-sided qualities, and opacity. The colors of the shadow and grid (on page 78) and also of transparent images (on page 224) can also be modified as required.

Note: The time taken to refresh the scene may increase slightly if you display a grid.

Procedures

To display the grid in a scene:

1. Do one of the following:
   - Choose **Display > Grid** on the Display menu.
   - Click the Grid button down arrow on the Display toolbar.
2. Do one of the following:
   - Click **Wire Grid** to display a wireframe grid.
   - Click **Solid Grid** to display a solid grid.
   - Click **Transparent Grid** to display a transparent grid.
3. Select the size of the grid you want from the Display menu or toolbar.

To display the grid in a transparent image:

1. Choose **Tools > Options** on the menu bar.
2. Click the 2D View tab.
3. Do one or more of the following in the Transparency Settings area:
   - Select the size and color of the grid.
   - Use the color selectors to the colors to apply to the alternating grid squares.
4. Click **OK**.

To hide the grid in a scene:

1. Do one of the following:
   - Choose **Display > Grid > No Grid** on the Display menu.
   - Click the Grid button down arrow on the Display toolbar, and then click **No Grid**.

To display and hide the scene shadow in a scene:

1. Do one of the following:
   - Choose **Display > Grid > Shadow** on the Display menu.
   - Click the Grid button down arrow on the Display toolbar, and then click **Shadow**.

If the shadow was displayed, it is now hidden. If it was hidden, it is now displayed.

Copyright © Right Hemisphere 2006. All Rights Reserved.

Objects and Materials

Models can comprise a number of scene elements (on page 78) including objects and materials. The Scene Components panel (on page 266) displays all objects and materials in the current scene in a tree-view hierarchy.

There are myriad object types including cameras, lights, markups, primitives, and parts. Objects can be comprise multiple sub-objects and can have materials and textures applied to them.

Materials are composed of composited layers and reflect the material properties. They are designed to principally reflect those attributes associated with maps, rather than color or scalar variables.

Objects and materials can be controlled in numerous ways including:

- Selecting (on page 86) and searching (on page 88) for objects.
- Perform various editing (on page 90) functions.
- Modifying object visibility (on page 95).
- Grouping (on page 96) multiple objects.
- Renaming (on page 97) objects.
- Deleting (on page 97) objects.
- Highlighting (on page 225) objects.
- Making objects transparent (on page 225).
- Modifying object properties (on page 271).
- Creating primitive (on page 155) objects.
- Viewing (on page 98) materials.
- Adding materials (on page 98) to objects.
- Adding textures (on page 98) to maps.
- Modifying the default material and textures visibility (on page 98).
- Creating, duplicating, deleting, and renaming (on page 98) materials.
- Selecting all objects (on page 98) associated with a material.
- Modifying the material and map properties (on page 98).

Object Instancing

When a model contains multiple objects with identical geometric meshes, the actual geometry of the object is saved only once. This is called the 'original object'. The object is then duplicated as many times as the object is used in the model, for the different locations and orientations throughout the scene. These are called 'instanced objects'. For example, if a spark plug is used eight times in a V8 engine, seven instances are created that point to the original object and it's geometry.

Note that if you duplicate objects (on page 90) using the 3D Editor, an instance of that object is used.

Instancing objects reduces the size of the file, helps save memory, increases render times, and increases the data transfer rate.

When you edit the geometry of an instanced object, all the objects based on it are updated to reflect the changes. Transforming, applying modifiers, and adding animation to individual objects does not modify any other instances of that object.

Note: If you modify an object's material, the material on all of the other object instances is also modified.

As all instanced objects point to the same polygonal mesh, you can see which mesh this is in the Object Properties dialog. The example below shows a circuit board model with numerous instanced objects, three of which point to the polygonal mesh number 3.

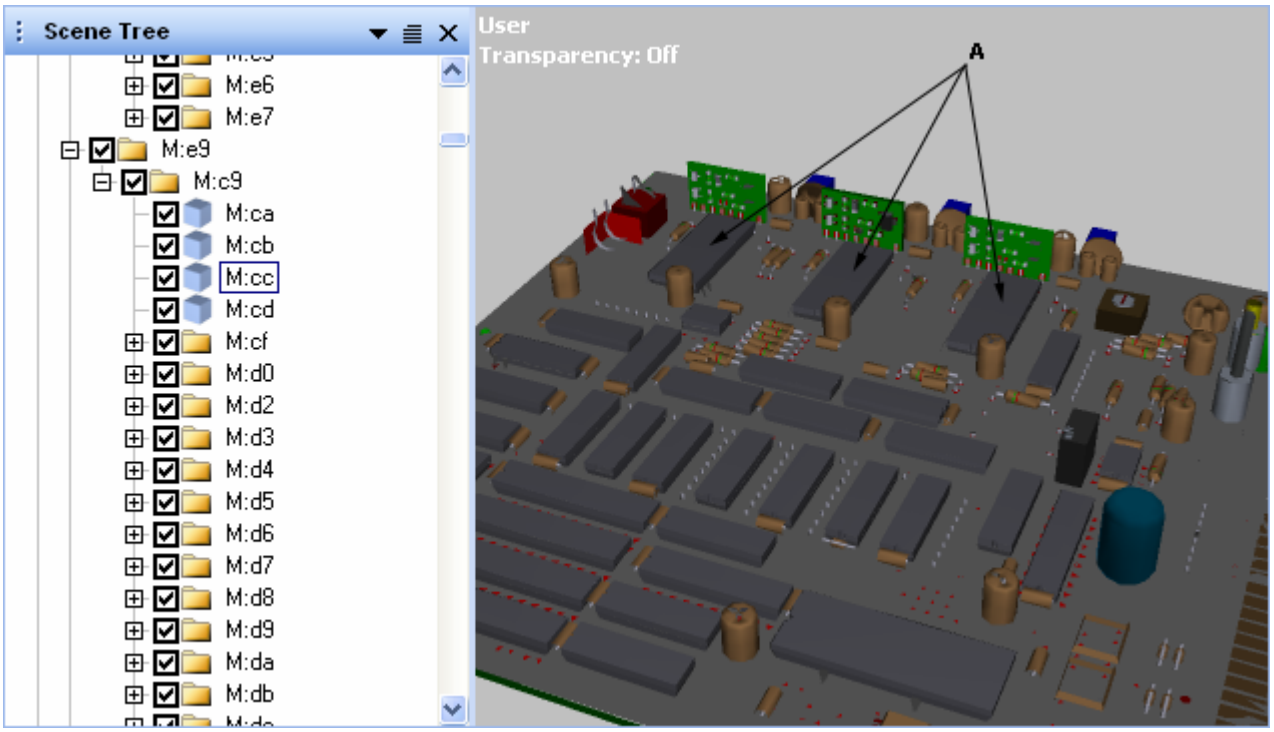

A: Instances of the 'M:cc' object

Copyright © Right Hemisphere 2006. All Rights Reserved.

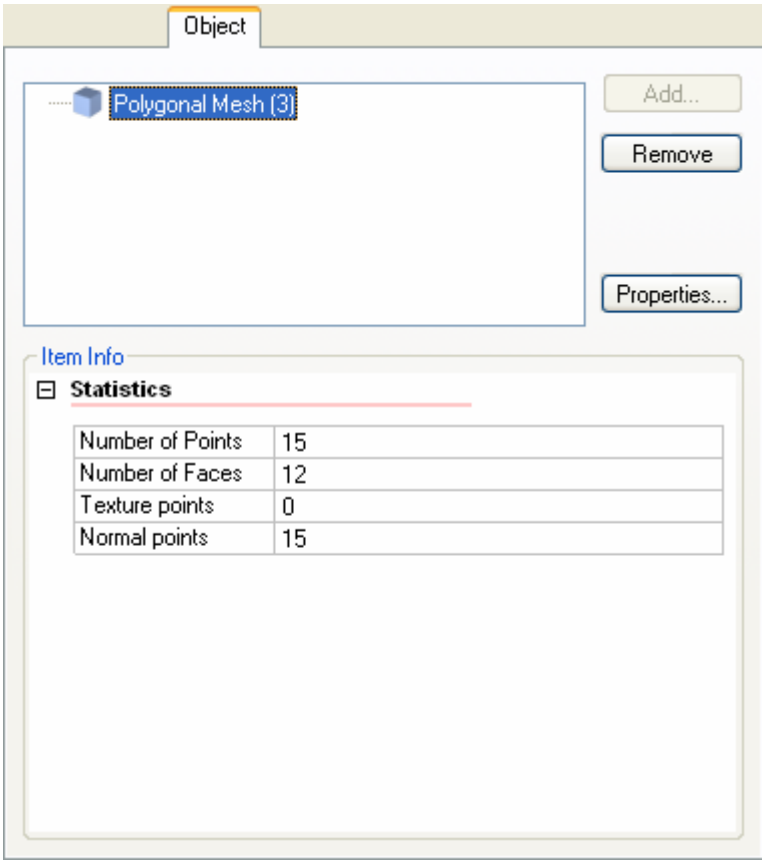

Object tab for the instanced 'M:cc' object

Object and Material Selection

Objects and materials must be selected before their properties can be modified.

This can be done in a variety of ways including manually selecting objects and materials in the Scene tree, and searching for objects by name, size, polygon count, or vertex count.

Individual, and grouped objects (both selected and unselected) can be highlighted or made transparent (on page 225). This 'isolates' the objects to make it easier to distinguish them from others.

Selecting Objects

Scene Components panel > Scene tree > 3D Objects list
Scene Components panel > Scene tree > Parts panel
Scene Components panel > Click Select Objects button
Selection tool > CTRL+drag in viewport
Click in viewport with no selection > Keyboard F3

Objects can be selected in a number of different ways. Precision selection tools are available that are helpful when selecting specific objects of complex shapes during model cleanup or animation work.

Here, we describe how to select objects manually, using the 3D Editor selection tools (on page 295) and using the Scene Components panel (on page 266). We also describe how to use the Select Objects dialog (on page 289) to search for and select objects.

When an object is selected, a bounding box outlines the object in the viewport, and the object name is highlighted in the 3D Objects list as shown below.

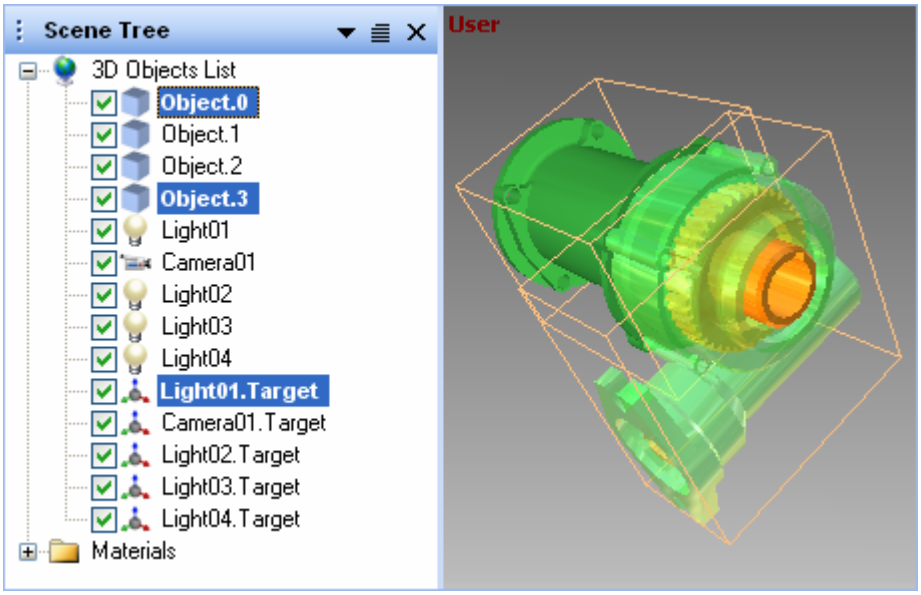

Multiple non-adjacent objects selected

Note: You can also use the Select tool on the 3D Editor toolbar to select non-adjacent objects.

'Window crossing' is very helpful as it means only those objects that the selection region actually crosses are selected.

Note that you can also select objects using by using the right-click menus (on page 315) and various selection keyboard shortcuts (on page 366) or via selecting materials (on page 98) and layers (on page 139).

Procedures

To manually select objects, do one of the following:

- Click the object in the viewport, hold down CTRL and drag in the viewport to select multiple objects.

  Note: The default selection type is rectangular selection. You can change the selection type using the 3D Editor.

- Click a 3D Editor selection tool, hold down CTRL and drag in viewport. All objects within the selection region are selected.

  Note: You can use the Window/Crossing tool to select only those objects that the selection region actually crosses.

- Click the object in the 3D Objects list or Parts panel. Hold down SHIFT to select adjacent objects or CTRL to select non-adjacent objects and click other objects in the list.
- Open the Select Objects dialog (on page 289) and click the objects you want to select. Hold down SHIFT to select adjacent files and folders, or hold down CTRL to select non-adjacent files and folders and click other objects in the list.

To search for and select objects:

1. Click the tab for the type of search you require in the Select Objects dialog.
2. Do one of the following:
   - If you are searching by name, enter the letter/s contained in the name of the objects you want to select.

Copyright © Right Hemisphere 2006. All Rights Reserved.

- If you are searching by size, polygon or vertex count, use the slider to specify the size or count for the objects you want to select.

3. Do one of the following:
   - If you are searching by name, select the Case-sensitive search check box to search for upper and lower-case characters.
   - If you are searching by size, polygon or vertex count, select the Invert selection check box to select the objects that are outside of the specified size or count.

To clear objects from selection, do one of the following:

- Click outside of the model in the viewport.
- Click another object in the 3D Objects list or Parts panel.
- Hold down CTRL+ALT and drag over the selected objects in the viewport.

Searching for Objects

Object searches are performed by entering search criteria in the Select Objects dialog (on page 289) tab fields. You can search by name, size, polygon count, or vertex count.

As you enter search criteria, by typing letters or moving the sliders, the objects that meet the specified criteria are selected in the objects list immediately. As you continue changing the criteria, so too does the object selection.

In the examples below, the letter 'p' was entered in the field and all objects that contained 'p' in their name were located and selected: group1, group2, persp, and polySurface1.

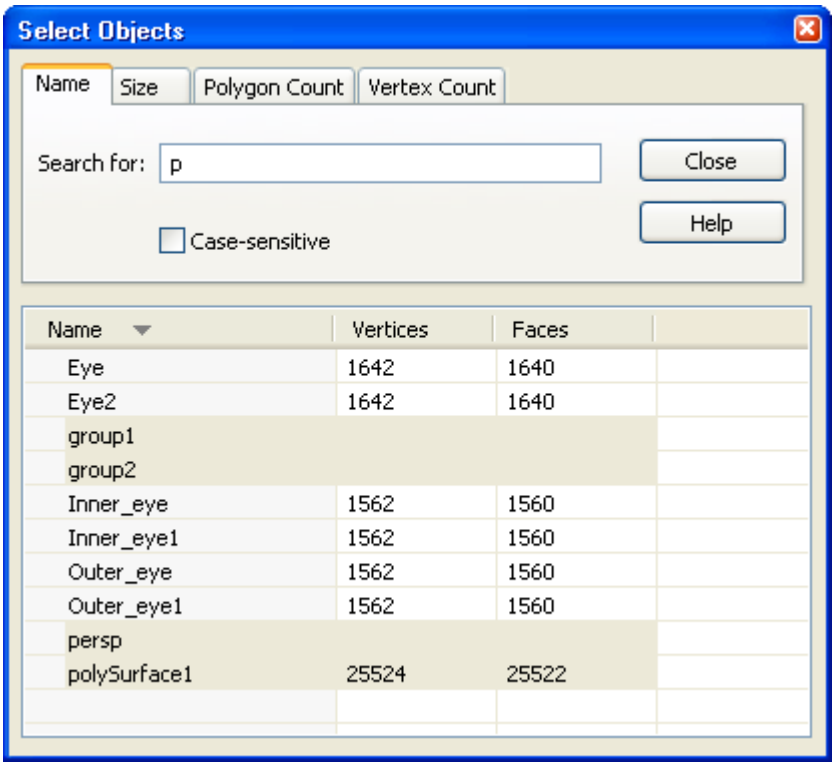

Selecting objects by name: 'p'

Next, the letter 'o' was entered, all objects that contained 'po' in their names were located and selected: polySurface1.

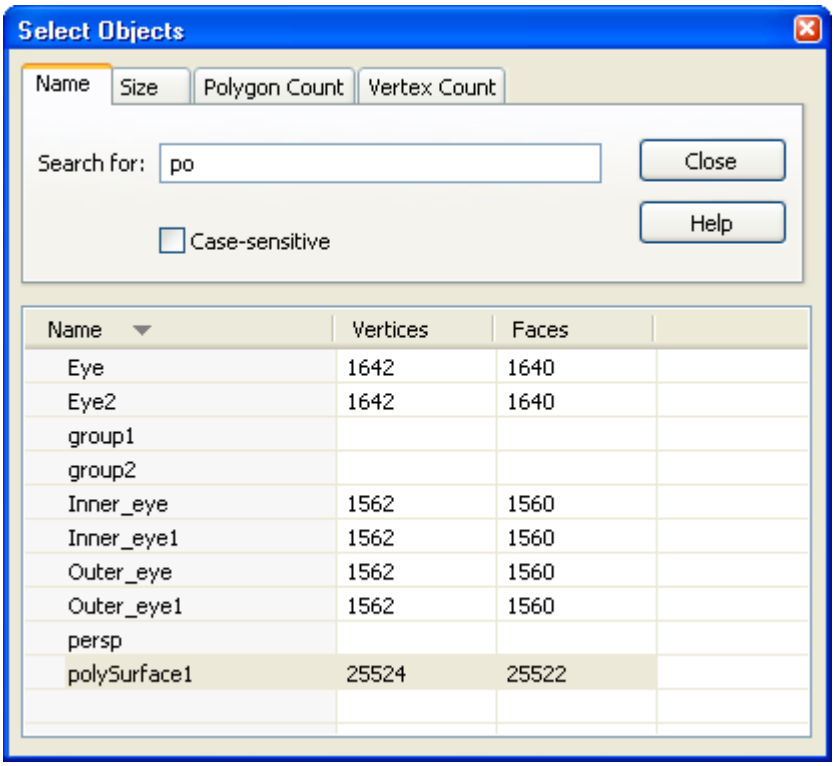

Selecting objects by name: 'po'

The objects list can be sorted in ascending or descending column order.

Note: Certain rules apply when searching by name as described below.

Searching Rules

Searching by name is performed by entering the letter/s contained in the name of the objects that you want to select. You can use upper and lower-case characters to further define your selection.

The following rules apply:

- You may use for any combination of letters (a through z) and numbers (0 through 9).
- The text entered must be in the correct order. For example, if you want to select objects with the name 'eye' in them, you can enter 'ey' but not 'ee'.
- Punctuation marks such as the period, colon, semicolon, comma, and hyphen are ignored.

Procedures

To select objects manually:

Click the objects you want to select in the Select Objects dialog list. You can use SHIFT to select adjacent files and folders, and CTRL to select non-adjacent files and folders.

To select objects using the selection tools:

1. Click the tab for the type of search you require in the Select Objects dialog.
2. Do one of the following:
   - If you are searching by name, enter the letter/s contained in the name of the objects you want to select.
   - If you are searching by size, polygon or vertex count, use the slider to specify the size or count for the objects you want to select.

Copyright © Right Hemisphere 2006. All Rights Reserved.

3. Do one of the following:
   - If you are searching by name, select the 'Case-sensitive search' check box if you want to search for upper and lower-case characters.
   - If you are searching by size, polygon or vertex count, select the Invert Selection check box if you want to select the objects that are outside of the specified size or count.

The objects are selected in the list, in the Scene Components panel and in the viewport.

To sort the objects list:

In the Select Objects dialog, click a column name for the column on which you want to sort. The list is sorted in ascending or descending order depending on the original order. A small triangle on the column name indicates the current order type.

Selecting Materials

Scene Components panel > Scene tree > Materials folder

Materials can be selected manually using the Materials folder, or from directly within the scene. When a material is selected, the material name is highlighted in the Materials folder.

Procedure

To manually select materials, do one of the following:

- Click the material in the Materials folder.
- Press SHIFT and click the material in the scene.

Object Editing Tools

Menu bar > View > Controls and Toolbars > 3D Editor
Right-click menu bar > 3D Editor
Customize Layout dialog > Toolbars tab > Select 3D Editor > OK
Menu bar > View > Controls and Toolbars > Object Position Controls
Right-click menu bar > Object Position Controls
Customize Layout dialog > Toolbars tab > Object Position Controls > OK

Using the 3D Editor toolbar, you can perform various functions on selected 3D objects including selecting, editing, copying, and transforming objects, and moving the objects' pivot point. Animation can be edited using the Edit keyframe animation tool in conjunction with the other 3D Editor tools.

Transforming objects can also be performed using the Object Position controls. These give you an interactive display of an object's position, rotation, and scale that allows precise object transformation. This can be helpful for more accurate animation control and alignment for precision training applications or simulations.

This section discusses transformation and copying of objects. Please see 3D Editor toolbar (on page 295) and Object Position controls (on page 266) for further information.

Duplicating Objects

The 3D Editor Move, Rotate, and Scale tools are used to copy objects. Note that when an object is duplicated, an instance (on page 84) of that object is used.

Transforming Objects

Axes 'connections' are displayed between each axis when you transform an object. The type of connection that is displayed depends on the transform tool and the axes on which you are transforming. When you select an axis, it is highlighted in yellow. If you select more than one axis, the axes connection is also highlighted in yellow.

For example, the Move tool displays a square between each axis and if you select more than one axis using the Move tool, both axes and the squares between them are displayed in yellow.

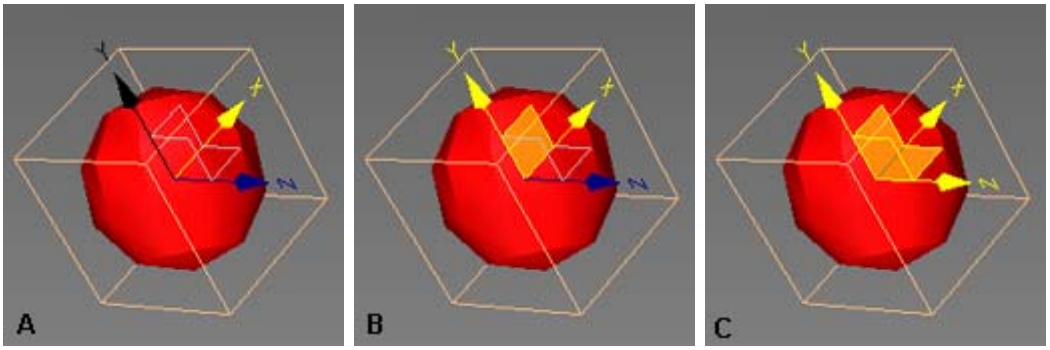

A: Movement along the X axis
B: Movement along the X and Y axes
C: Movement along the X, Y, and Z axes

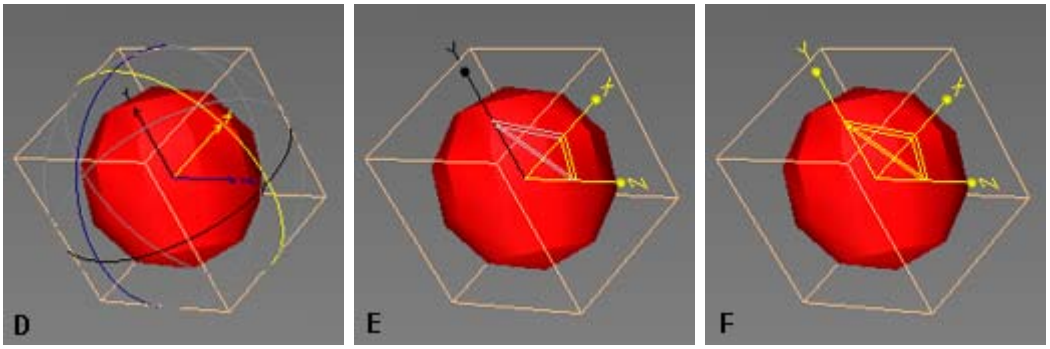

D: Rotation about the X axis
E: Scaling on the X and Z axes
F: Scaling on the X, Y, and Z axes

Transform Rules

Certain rules apply to the 3D Editor toolbar; these determine movement, rotation, scaling, and moving pivot points.

- Objects and pivot points are moved relative to the selected tool, and the axis or axes selected.
- Movement can be performed on no more than two axes at one time. Note that if only one axis is selected, the objects move on that axis. If two axes are selected, the model moves on that surface.
- Rotation can be performed on one axis only at one time. As you rotate, the viewport label (on page 61) displays the degree of rotation.
- Scaling can be performed on one, two and three axes at one time.
- Moving a pivot point can be performed on no more than two axes at one time.
- Rotating a pivot point can be performed on one axis only at one time.

Copyright © Right Hemisphere 2006. All Rights Reserved.

Move Tool

3D Editor toolbar > Move > Drag object along axes
3D Editor toolbar > Move > Object Position controls > Use spinners
Select objects > 3D Editor toolbar > Move > Drag objects

The Move tool  is used to move selected objects relative to the selected tool, and the axis or axes selected. When the Move tool is selected, the Object Position controls displays the objects' position along the X, Y, and Z axes. You can then move the selected objects by dragging them within the viewport or by using the Object Position controls.

Movement can be performed on no more than two axes at one time. Note that if only one axis is selected, the objects move on that axis. If two axes are selected, the model moves on that surface.

You can also use the Move tool to copy selected objects.

Procedure

To move selected objects:

1. Select the objects (on page 86) that you want to move.
2. Click **Move**  on the 3D Editor toolbar.
3. Do one or more of the following:
   - Move the cursor over the objects' axis, and then drag the object.
   - Move the cursor over the objects' axes, and then drag the object.
   - Use the X spinner to move the selected objects along the X axis.
   - Use the Y spinner to move the selected objects along the Y axis.
   - Use the Z spinner to move the selected objects along the Z axis.

To copy objects using the Move tool:

1. Select the objects that you want to copy.
2. Click **Move**  on the 3D Editor toolbar.
3. Press CTRL and drag the objects as you would normally.

The selected objects are duplicated.

Rotate Tool

3D Editor toolbar > Rotate > Drag objects along axes
3D Editor toolbar > Rotate > Object Position controls > Use spinners
Select objects > 3D Editor toolbar > Rotate > Drag objects

The Rotate tool  is used to rotate selected objects relative to the selected axis. When the Rotate tool is selected, the Object Position controls displays the objects' rotation around the X, Y, and Z axes. You can then rotate the selected objects by dragging them within the viewport or by using the Object Position controls.

Rotation can be performed on one axis only at one time. As you rotate, the viewport label (on page 61) displays the degree of rotation. See also Gimbal Lock (on page 371).

You can also use the Rotate tool to copy selected objects.

Procedure

To rotate selected objects:

1. Select the objects (on page 86) that you want to move.
2. Click **Rotate**  on the 3D Editor toolbar.
3. Do one or more of the following:
   - Move the cursor over the objects' axis, and then drag the object.
   - Use the X spinner to rotate the selected objects along the X axis.
   - Use the Y spinner to rotate the selected objects along the Y axis.
   - Use the Z spinner to rotate the selected objects along the Z axis.
   - Right-click over the X, Y, or Z spinner, and then click a predefined degree of rotation to apply to the selected axis.

To copy objects using the Rotate tool:

1. Select the objects that you want to copy.
2. Click **Rotate**  on the 3D Editor toolbar.
3. Press CTRL and drag the objects as you would normally.

The selected objects are duplicated.

Scale Tool

3D Editor toolbar > Scale > Drag objects along axes
3D Editor toolbar > Scale > Object Position controls > Use spinners
Select objects > 3D Editor toolbar > Scale > Drag objects

The Scale tool  is used to scale selected objects relative to the selected axis or axes. If no axis selected, the objects are scaled by X,Y,Z axis. When the Scale tool is selected, the Object Position controls displays the objects' position along the X, Y, and Z axes. You can then scale the selected objects by dragging them within the viewport or by using the Object Position controls.

Scaling can be performed on one, two and three axes at one time.

Note: Non-uniform scale is possible when a scene is in the Local coordinate system only.

You can also use the Scale tool to copy selected objects.

Procedure

To scale selected objects:

1. Select the objects (on page 86) that you want to scale.
2. Click **Scale**  on the 3D Editor toolbar.
3. Do one or more of the following:

Copyright © Right Hemisphere 2006. All Rights Reserved.

- Move the cursor over the objects' axis, and then drag the object.
- Move the cursor over the objects' axes, and then drag the object.
- Use the X spinner to scale the selected objects along the X axis.
- Use the Y spinner to scale the selected objects along the Y axis.
- Use the Z spinner to scale the selected objects along the Z axis.

To copy objects using the Scale tool:

1. Select the objects that you want to copy.
2. Click **Scale**  on the 3D Editor toolbar.
3. Press CTRL and drag the objects as you would normally.

The selected objects are duplicated.

Move Pivot Point

3D Editor toolbar > Move Pivot Point > Drag objects along axes
3D Editor toolbar > Move Pivot Point > Object Position controls > Use spinners

The Move Pivot Point tool  is used to move the selected objects' pivot points relative to the selected axis or axes. When the Move Pivot Point tool is selected, you can then move the selected objects' pivot points by dragging them within the viewport.

Moving a pivot point can be performed on no more than two axes at one time.

Procedure

To move selected objects:

1. Select the objects (on page 86) that you want to move.
2. Click **Move Pivot Point**  on the 3D Editor toolbar.
3. Do one or more of the following:
   - Move the cursor over the objects' axis, and then drag the object.
   - Move the cursor over the objects' axes, and then drag the object.

Rotate Pivot Point

3D Editor toolbar > Rotate Pivot Point > Drag objects along axes
3D Editor toolbar > Rotate Pivot Point > Object Position controls > Use spinners

The Rotate Pivot Point tool  is used to rotate the selected objects' pivot points relative to the selected axis. When the Rotate Pivot Point tool is selected, you can then rotate the selected objects' pivot points by dragging them within the viewport.

Rotating a pivot point can be performed on one axis only at one time.

Procedure

To move selected objects:

1. Select the objects (on page 86) that you want to move.
2. Click Rotate **Pivot Point**  on the 3D Editor toolbar.
3. Move the cursor over the objects' axis, and then drag the objects.

Copyright © Right Hemisphere 2006. All Rights Reserved.

Showing and Hiding Objects

Scene Components panel > Scene tree > Select object check box
Scene Components panel > Scene tree > Clear object check box
Right-click object in viewport > Hide Selection/Hide Unselected/Hide All Objects
Right-click object in viewport > Show Selection/Show All Objects
Select object in Scene tree > Keyboard H

The 3D Objects list (on page 269) check boxes and right-click menu (on page 336) can be used to show and hide objects. You can also use the 3D viewport right-click menu (on page 315) to show and hide objects.

The Scene tree check boxes respect hierarchy if it is present. For example, clearing the highest check box in a hierarchy clears all subordinate check boxes.

Procedures

To hide objects, with the objects displayed do one of the following:

- Clear the objects' check boxes in the 3D Objects list.
- Select the objects (on page 86) you want to hide, right-click in the viewport or over the objects in the 3D Objects list, and then click **Hide Selection** to hide all selected objects.
- Select the objects you want to show, right-click over the objects or over the objects in the 3D Objects list, and then click **Hide Unselected** to hide all unselected objects.
- Right-click in the viewport or 3D Objects list and click **Hide All Objects** to hide all objects.

To show objects, with the objects hidden do one of the following:

- Select the objects' check boxes in the 3D Objects list.
- Select the objects (on page 86) you want to show, right-click in the viewport or over the objects in the 3D Objects list, and then click **Show Selection** to show all selected objects.
- Right-click in the viewport or 3D Objects list and click **Show All Objects** to show all objects.

To toggle object and sub-object display:

Select the object in the Scene tree and press H on your keyboard.

Grouping and Hierarchies

The Scene Components panel (on page 266) displays all objects in the current scene in a tree-view hierarchy including bone, light, camera, material, part, and animation objects.

Windows hierarchy conventions apply to the panel. For example, if you select an object's parent check box, all child objects are also selected. However, pressing CTRL and selecting a parent check box, selects only that object.

If an object contains sub-objects ('child' objects), a plus sign [+] appears next to the 'parent' object. You can expand the parent objects and materials to show sub-objects by clicking the plus sign [+], and you can collapse an object to hide its sub-objects in the Scene tree by clicking on the minus sign [-].

You can create groups of objects; this is useful for animation and assembly files. You can also collapse object hierarchies into a single mesh. Note that if you collapse individual objects that are located within containing folders, all the objects are collapsed into a single mesh and are given an automatically generated name in the 3D Objects list. If you select a folder to collapse, everything within that folder is collapsed into a single mesh, and the name of the folder remains the same.

Note: Collapsing the hierarchy deletes any animation that may exist on sub-objects. If the scene is saved the original hierarchy cannot be recovered.

Procedures

To create a group:

1. Select the objects you want to group.
2. Do one of the following:
   - Right click in the 3D Objects list or Parts panel.
   - Right-click in the viewport.
3. Do one of the following:
   - Click **Create Group**. A new group object is created containing the selected objects.
   - Click **Attach to Group** and click the object under which you want the objects to be grouped. The selected objects are grouped under the object on which you clicked.

To separate a group:

1. Select the group in the viewport, 3D Objects list, or Parts panel.
2. Right click and click **Ungroup**.

To attach objects to an existing group:

1. Select the objects you want to attach to a group.
2. Do one of the following:
   - Right click in the 3D Objects list or Parts panel.
   - Right-click in the viewport.
3. Click **Attach to Group**.
4. Click the group into which you want to attach the objects. The selected objects are added to the group on which you clicked.

To detach objects from a group:

1. Select the objects you want to detach.
2. Right click in the 3D Objects list or Parts panel.
3. Click **Detach from Group**.

To delete a group:

Right-click the group in the 3D Objects list or Parts panel and click **Delete**.

To collapse an object hierarchy:

1. Do one of the following:
   - Select the objects that you want to collapse within their containing folder in the 3D Objects list.
   - Select the folder in the 3D Objects list for which you want to collapse its objects.
2. Right-click over one of the selected objects and choose **Tools > Collapse Hierarchy**.

Copyright © Right Hemisphere 2006. All Rights Reserved.

Renaming and Deleting Objects

Scene Components panel > Scene Tree > 3D Objects list
Scene Components panel > Parts panel
Scene Components panel > Layers panel
Object Properties dialog > Transformation tab
Object Properties dialog > Object tab

Objects can be renamed and deleted using a number of methods; from within the viewports (on page 240), 3D Objects list (on page 266), Parts panel (on page 288), Layers panel (on page 289), and Object Properties dialog (on page 271).

Procedures

To rename a material, do one of the following:

- Right-click the material you want to rename in the 3D Objects list, Parts panel, or Layers panel, click **Rename**, type the name you want, and then press ENTER.
- Open the Object Properties dialog for the object you want to delete, click the Object tab, type the name you want in the Name field, and then click **OK**.

To delete objects, do one of the following:

- Select the objects in the viewport, 3D Objects list, Parts panel, or Layers panel, and then press DELETE.
- Right-click the objects in the viewport, 3D Objects list, Parts panel, or Layers panel, and then click **Delete Objects**.
- Open the Object Properties dialog for the object you want to delete, click the Object tab, select the object in the Object window, and then click **Remove**.

Materials

Scene Components panel > Materials

Materials can be controlled in a number of ways using the Materials folder (on page 266), Materials list (on page 287), Display menu (on page 208), and Object (on page 271) and Material Properties (on page 282) dialogs.

The Materials list displays the materials as thumbnails, the number of textures that have been applied to each material, the maps to which the textures have been applied, if the opacity had been modified, and if the UV offsets have been modified.

A right-click menu (on page 337) is available from where you can perform various material functions including creating new materials, removing unused materials, and merging duplicate materials.

Keyboard shortcuts (on page 363) are available for the display of materials. The viewport label (on page 61), displayed in the top, left of the viewport, shows whether textures are being displayed.

Procedures

To create a material:

Right-click in the Materials folder or Materials list and click **Create Material**.

To view materials:

Open the Materials folder or Materials list.

To add a material to an object, do one of the following:

- Drag a material from the Materials folder or Materials list to the object in the scene.
- Drag a material from Windows Explorer to the object in the scene.

To remove a material from objects:

Drag the default material from the Materials folder or Materials list to the object in the scene. All materials are replaced by the default material.

To remove unused materials:

Right-click in the Materials folder click **Remove Unused Materials**.

To merge duplicate materials:

Right-click in the Materials folder click **Merge Duplicate Materials**.

To toggle the display of materials:

- Choose **Display > Materials > Use Default Material** on the menu bar.
- Press CTRL+M on your keyboard.

When the default material is used, the scene's material are 'off'.

To toggle the display of textures:

- Choose **Display > Materials > Show T**extures on the menu bar.
- Press CTRL+T on your keyboard.

To add a texture to a map, do one of the following:

- Drag a texture from the Textures tab (on page 314) to the object in the scene.
- Open the Material Properties dialog for the material, click the Maps tab, select the map to which you want to add the texture, click Browse, navigate to and select the texture you want, click **Open**, and then click **OK**.

To duplicate a material:

1. Select the material (on page 90) you want to duplicate.
2. Right-click in the Materials folder or Materials list and click **Duplicate Material**.

To delete a material:

1. Select the material you want to delete.
2. Right-click in the Materials folder or Materials list and click **Delete Material**.

To rename a material:

1. Right-click the material you want to rename in the Materials folder or Materials list.
2. Click **Rename Material**.
3. Type the name you want and press ENTER.

To select objects associated with a material, do one of the following:

- Click the material in the Materials list for which you want to select the objects.
- Right-click the material in the Materials list for which you want to select the objects, and then click **Select Objects**.

Copyright © Right Hemisphere 2006. All Rights Reserved.

To modify the material and map properties, do one of the following:

- Open the Material Properties dialog for the material, click the Maps tab, select to which you want to add the texture, click Browse, navigate to and select the texture you want, click **Open**, and then click **OK**.

Animation

A range of animation tools can be used to create new scene animations, and to modify animation within files imported from other applications system.

Animation supports object grouping, the display of motion paths, changing pivot points, and 'keyframes'. A key is a value fixed in time; single value keys such as opacity, and vector key such as position and color. Keys can be created and edited using the 3D Editor toolbar (on page 295) or the timeline (on page 257).

The timeline shows time progressing in a graph-like display beginning at the left. It shows the keys for the currently selected object and is used to edit those keys. Various other animation controls and options are available with which to create and modify animations.

The Animation tree (on page 289) displays a list of all the components that are associated with any animation in the current 3D file. A right-click context menu (on page 339) is also available from where you can perform a number of functions relating to animation.

It is possible to create both a linear type animation where an object moves from one point to another like a pool ball bouncing off cushions, and a more fluid animation, where the object takes smoother corners. Animations can also be made cyclic; the entire animation is made to repeat from beginning to end. Repeated animation is displayed as dotted red lines in the timeline.

The following is an example of how to create an animation using the timeline, with a scene that includes the three objects as shown below.

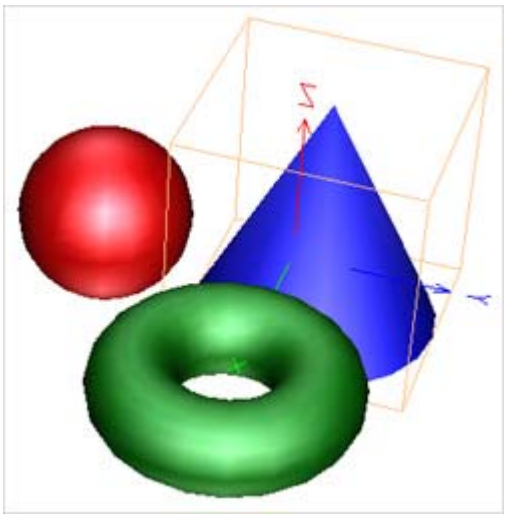

Example: Animating a scene

Procedures

To create a simple animation:

1. Display the animation timeline (on page 253) and drag the bottom edge of the timeline downwards so that it is displayed in about 1/3 of the total screen space.
2. Display the 3D Editor toolbar and click **Edit Keyframes** . A red box surrounds the animation control's (on page 254) time/frame slider.

   Note: If no sequence is found within the current file, one is created automatically.
3. Click one of the 3D Editor navigation tools. For example, Move, Rotate, or Scale.
4. Select the object or objects that you want to animate first.

Copyright © Right Hemisphere 2006. All Rights Reserved.

5. Move the time/frame slider (on page 254) in the timeline to the position to which you want to move the objects. The timeline's purple 'time/frame line' moves with the time/frame slider. This line shows the current time/frame. You can also move the line and time/frame slider by clicking at the frame you require in the timeline.
6. Move the objects along their axes to the position that you require. As you move the objects, the related tracks, keys and axes curves are re-positioned in the timeline.
7. Expand the current sequence in the timeline to view the related tracks, keys and axes curves.
8. Move the time/frame slider to the next position to which that you want to move the objects.
9. Move the objects along their axes to the next position that you require.

Note: You can slide the time/frame slider back and forth between the frames to see the animation you have just created. The animation is currently 'linear (on page 103)': straight lines between the keys resulting in a mechanical type of animation. You can apply TCB interpolation (on page 103) to create a smooth rate of change through and between keys.

10. Right-click in the timeline and choose **Track Properties > TCB Interpolation**. The axes curves are smoothed out.
11. Slide the time/frame slider back and forth between the frames. The objects move smoothly along the axes.
12. Move to the last frame in which you positioned the objects.
13. Right-click in the timeline, and then choose **Track Options > End Cyclic**. This repeats the animation continuously. The repeats are displayed as dotted lines in the timeline.
14. Click **Forward**  on the Animation controls to play the animation.

To edit an animation using the timeline:

1. Open the file (on page 42) for which you want to edit the animation.
2. Display the animation timeline.
3. Select the keys for the objects you want to edit.
4. Drag the key around the timeline.

To edit an animation using the 3D Editor toolbar:

1. Open the file for which you want to edit the animation.
2. Click **Edit Keyframes** on the 3D Editor toolbar.
3. Select the objects you want to edit.
4. Use the 3D Editor transformation tools to edit the objects.

A key is created for the current transformation type in the current frame every time you edit the animation.

To manually advance through an animation:

Drag the time/frame slider to move forwards and backwards through the animation.

Sequences

Animation Options dialog > Add
Animation Options dialog > Edit
Animation Options dialog > Delete

Certain files may have animated sequences, that is, a sequence of 3D files with separate files for each animation frame. These sequences can be modified from within the Animation Options dialog (on page 255).

Note that you can create animated explosions using the Explode Objects tool (on page 122); useful for generating 2D illustrations and dynamic 3D documents.

Procedures

To add a sequence:

1. Open the file (on page 42) to which you want to add a sequence.
2. Open the Animation Options dialog and click **Add**.

To edit a sequence:

1. Open the file to which you want to edit a sequence.
2. Open the Animation Options dialog, click the sequence in the Sequence window, and the click **Edit**.
3. Select the frame number where you want the animation to begin in the Start field.
4. Select the frame number where you want the animation to end in the End field.
5. Select the frames per second in the FPS field.

To delete a sequence:

1. Open the file from which you want to delete a sequence.
2. Open the Animation Options dialog, click the sequence in the Sequence window, and the click **Delete**.

The sequence is deleted immediately.

Interpolation Methods

Two kinds of interpolation methods can be applied to keys: linear and TCB (tension, continuity, and bias - smooth).

Linear Interpolation

The Linear interpolation method creates a uniform rate of change between keys that manifest in a mechanical type of animation. It requires only two keys to function. This method always creates straight lines between the keys with sharp corners at the key itself.

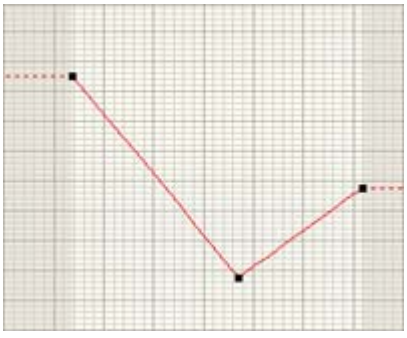

Linear interpolation between 3 keys

Copyright © Right Hemisphere 2006. All Rights Reserved.

TCB Interpolation

The TCB interpolation method creates a smooth rate of change through and between keys. If the previous and next keys also use TCB interpolation, the shape of the curve near the previous or next keys also change. It requires at least three keys to be able to see the smooth change.

A key with linear interpolation in a series of segments of smoothly interpolated keys creates a sharp corner at a point in time where the linearly interpolated key is located. This method is helpful want you want to softly animate the movement of a model.

Note: TCB values affect the curvature of the smoothly interpolated keyframes but they can also affect the speed.

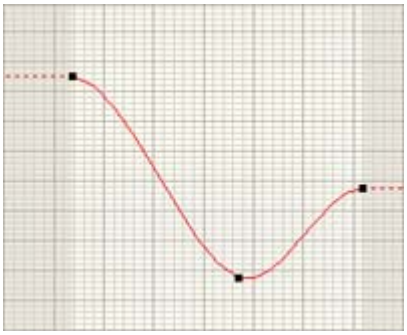

TCB interpolation between 3 keys

TCB Interpolation Values

TCB interpolation uses three values to fine tune the appearance of the keys: tension, continuity and bias.

- **Tension:** Controls how sharply the curve bends at the key.
- **Continuity:** Controls how smoothly the curve moves 'through' the key.
- **Bias:** Controls the balance between the curve before and after the key.

The following examples, show keys with differing TCB values.

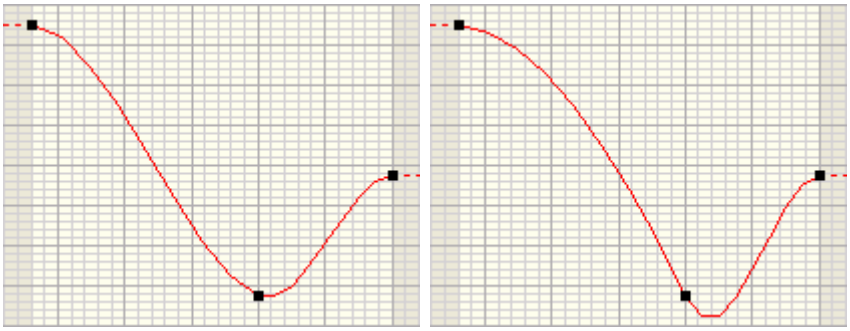

Tension, bias, and continuity = 0 / Tension = -3, bias and continuity = 0

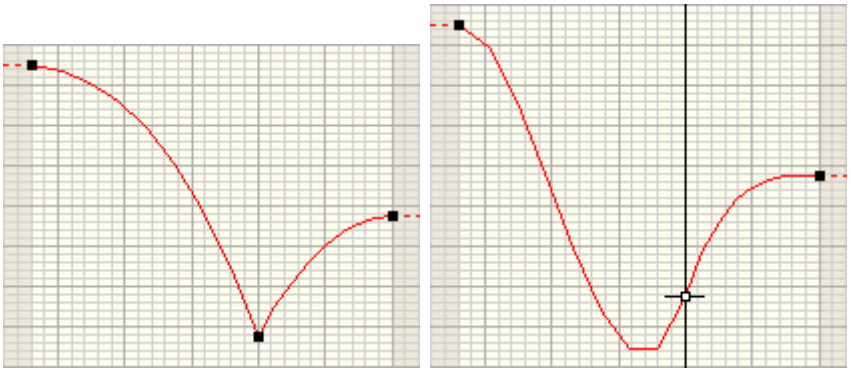

Tension and bias = 0, continuity = -3 / Tension and continuity = 0, bias = -3

Copyright © Right Hemisphere 2006. All Rights Reserved.

Audio and Video Files

Many audio and video files can be viewed in Deep Exploration, and you can save to a number of audio and video formats.

When you open a video (on page 293) or audio (on page 260) file, controls are displayed that allow you to control the file. For example, you can play, pause and lower the volume of video and audio files.

See also Appendix C: Audio File Formats (on page 494) and Appendix D: Video File Formats (on page 502).

Note: To save a file to the .avi format, you must use the Vector Illustration tool (on page 135).

Benchmarking a File

Menu bar > Tools > 3D Tools > Benchmark
Right-click 3D viewport > Tools > Benchmark

You can use the Benchmark command to compile information about the current file, the speed of your computer and graphics card in relation to the current file, and to export the file to a text file. You can set various benchmark settings (on page 223) including selecting the number of scene renders to ignore before the benchmark process begins and the number of scene render samples that are used to calculate the rendering speed.

When you perform the benchmark process, the current file is opened and rotated on your monitor while Deep Exploration compiles the information. It then sends the information to a text file.

At any point while the file is displayed on your monitor, you can press any key on your keyboard to cancel the benchmark process.

The following is an example of the information compiled during the benchmark process:

Benchmark 2004-03-01-14-49-17

Module name: benchmark.x3d (3.5.4.391)
DE version: 3.5.0.391
api version: 0x8d

Windows XP 5.1 (Build 2600) Service Pack 1
CPU: INTEL Pentium-III
Number of processors: 1
Total Physical Memory: 511MB
Total Virtual Memory: 2047MB

Information from x3d driver:
viewport_NVIDIAOPENGL
NVIDIA Corporation Quadro FX 1000/AGP/SSE 1.4.0
Window Size 1280 x 1024
NV4_DISP 1280 x 1024 32 bit @ 75 MHz

For scene file:
U:\Product Development\QA-Testing\Test Models\animated\C&M 2K E tongue.lws
Materials: 3
Vertices: 6 858
Faces: 10 261

DECLARED TIME PERIOD 20 ,SECONDS
REAL TIME PERIOD 19.989 ,SECONDS

(1) count 1443 (omitted frames 0)
71.4286 / 109.357 / 142.857 fps

Procedures

To benchmark a file:

1. Do one of the following:
   - Click **Tools > 3D Tools** on the menu bar and then click **Benchmark.**
   - Right-click in the 3D viewport and choose **Tools > Benchmark**.
2. Make the selections you require.
3. Click **Start**.

The benchmark text file is saved in the Benchmark folder where Deep Exploration is installed on your computer. The file is opened and rotated on your monitor while the application compiles the information.

Copyright © Right Hemisphere 2006. All Rights Reserved.

To cancel the benchmark process:

Press any key on your keyboard.

CADTools

Menu bar > View > Controls and Toolbars > CADTools
Right-click menu bar > CADTools
Customize Layout dialog > Toolbars tab > Select CADTools > OK

CADTools is a set of tools used to optimize 3D files for display and manipulation. Polygon reduction tools can significantly reduce the density of 3D models with minimal loss in visual definition resulting in a more interactive performance, and faster download speeds for Web-based 3D applications.

In certain cases polygon reduction requires lots of RAM. The amount varies depending upon file type and complexity. Separate objects can be selected and reduced to minimize memory use.

Using CADTools you can:

- Invert faces and normals (on page 109) to reverse the order of the points and 'flipping' the direction of the normals on the faces of the model.
- Unify normals (on page 110) to align all normals in the same direction.
- Remove internal parts (on page 111) to reduce the file size.
- Remove small parts (on page 112) to reduce the file size.
- Separate meshes (on page 113) to group an object that is grouped under one object but made up of a number of separate meshes, as separate meshes under the objects name.
- Join equal points (on page 114) for more efficient models.
- Reduce the polygon count (on page 116) of a model while preserving defining visual features.
- Duplicate object polygons (on page 122) to display the same surface on both faces.
- Weld disjointed faces (on page 120) and mend cracks between poorly joined sections, overlapping geometry, and duplicated edges.
- Apply different colors to adjacent objects (on page 124) for easy identification.
- Explode models (on page 122) to clearly display assemblies in a traditional illustration style.
- Apply UV mapping (on page 172) coordinates to selected models.
- Simulate global illumination (on page 157) utilizing the ambient occlusion technique, to render models as if they are surrounded by a dome of light.
- Modify the settings for certain tools.

Inverting Faces and Normals

CADTools toolbar > Invert Faces
CADTools toolbar > Invert Normals
CADTools toolbar > Invert Faces and Normals
Right-click 3D viewport > Tools > Invert Faces

3D applications have polygon faces that are either double-sided or single-sided. Single-sided faces are visible on one side and invisible on the other, resulting in higher rendering rates for real-time 3D software. Also, certain applications define 'visible' as a face that has points defined in a clockwise order relative to the viewing camera. With others, it is points defined in a counter-clockwise order.

For example, if a model looks 'inside-out' when imported, the original application either supported double-sided faces, or faces that were defined to be visible if counter-clockwise.

As there is no way to define which faces are visible when importing models, some faces and/or surface normals may be incorrectly orientated (facing backwards). You can use the Invert tools to reverse the order of the points and 'flipping' the direction of the normals on the faces of the model.

If you select one or more objects, only the faces or normals of the selection are reversed. If no objects are selected, all faces or normals of the model are reversed.

Copyright © Right Hemisphere 2006. All Rights Reserved.

Procedure

To invert faces and/or normals:

1. Open a 3D file (on page 42).
2. Select the objects for which you want to invert faces and/or normals.
3. Do one of the following:
   - Click **Invert Faces**  to invert faces only.
   - Click **Invert Normals**  to invert surface normals only.
   - Click **Invert Faces and Normals**  to invert faces and surface normals.

The objects' faces and/or normals are inverted.

Unifying Normals

Menu bar > Tools > 3D Tools > Unify Normals
CADTools toolbar > Unify Normals
Right-click 3D viewport > Tools > Unify Normals

The Unify Normals tool can be used to orient all normals correctly, that is, align them in the same direction. This is helpful when imported geometry is not properly joined, resulting in surface normals being oriented in the wrong direction, and models displaying incorrectly.

You can choose the action for objects with incorrectly aligned normals: select, highlight, or mark as double-sided. If you choose to select objects, you can then use other CADTools tools to correct the selected faces. For example, you could invert the normals (on page 109).

Procedure

To unify normals:

1. Open a 3D file (on page 42).
2. Click **Unify Normals**  on the CADTools toolbar.
3. Make your selections (on page 110) as required and click **OK**.

The objects are selected, highlighted, or marked as double-sided depending on your selection.

Unify Normals Dialog

CADTools toolbar > Unify Normals

You can modify the settings for unifying normals from models during the process.

Procedure

To open the Unify Normals dialog:

Click Unify Normals  on the CADTools toolbar.

Interface

Scene Analysis—Used to set the type of analysis to apply to the scene.

- **Skip hidden meshes**—Processes visible meshes only.
- **Apply to polygons**—Processes the model at the polygon or the object level. Note that this may slow down the operation.

Action for questionable parts found—Used to determine the action taken for objects when the tool cannot identify if the normals are correctly or incorrectly aligned.

- **Select**—Selects any objects with incorrectly aligned normals in the viewport.
- **Highlight**—Highlights any objects with incorrectly aligned normals in the viewport. You can use the color selector to select a highlight color.
- **Mark as double-sided**—Converts any objects with incorrectly aligned normals to double-sided.

Scene Processing Level—Selects the level of speed and quality at which to process the scene.

OK—Applies the process, closes the dialog, and saves the settings.

Cancel—Cancels the process and closes the dialog. Any changes made to the settings are lost.

Help—Opens the relevant Help topic.

Removing Internal Parts

Menu bar > Tools > 3D Tools > Remove Internal Parts
CADTools toolbar > Remove Internal Parts
Right-click 3D viewport > Tools > Remove Internal Parts

Some scenes, especially those containing CAD models, can comprise many internal objects. If an application does not need to 'see' internal objects, the model can be simplified by hiding or deleting these objects. This is helpful in reducing the file size if you choose to delete internal objects.

Note that this function cannot be reversed.

Procedure

To remove internal parts:

1. Open a 3D file (on page 42).
2. Click **Remove Internal Parts**  on the CADTools toolbar.

Copyright © Right Hemisphere 2006. All Rights Reserved.

3. Make your selections (on page 112) as required and click **OK**.

The internal objects are hidden, selected, or deleted depending on your selection.

Remove Internal Parts Dialog

CADTools toolbar > Remove Internal Parts

You can modify the settings for removing internal parts from models during the process.

Procedure

To open the Remove Internal Parts dialog:

Click **Remove Internal Parts**  on the CADTools toolbar.

Interface

Scene Analysis—Used to set the type of scene analysis you require.

- **Skip hidden meshes**—Processes visible meshes only.
- **Remove hidden polygons**—Removes hidden polygons from partially visible objects. That is, the scene is analyzed at the polygon level. Otherwise, it is analyzed at the object level. Note that using this option reduces processing speed.
- **Ignore transparency**—Does not display any internal objects that are visible through transparent surfaces, that is the internal parts are removed.

Action—Used to determine the action taken with all objects matching the selection criteria.

- **Hide**—Hides any internal objects in the viewport.
- **Select**—Selects any internal objects in the viewport.
- **Hide and Select**—Hides and selects any internal objects in the viewport.
- **Delete**—Deletes any internal objects from the scene.

Scene Processing Level—Selects the level of speed and quality at which to process the scene.

OK—Applies the process, closes the dialog, and saves the settings.

Cancel—Cancels the process and closes the dialog. Any changes made to the settings are lost.

Help—Opens the relevant Help topic.

Removing Small Parts

CADTools toolbar > Remove Small Parts

Some scenes, especially those containing CAD models, can comprise many objects with varying scales. If an application does not need to 'see' smaller objects, the model can be simplified by removing these objects. This is helpful in reducing the file size. You can also modify the settings for removing small parts.

To remove small objects, you must first specify the size of the parts that you want removed. The model and object size is taken as the size of the diagonal of the containing bounding box.

Note that this function cannot be reversed.

Procedure

To remove small parts:

1. Open a 3D file (on page 42).
2. Click the Remove Small Parts down arrow on the CADTools toolbar.
3. Click **Settings**.
4. Make your selections as required and click **OK**.
5. Click **Remove Small Parts** .

All objects beneath the specified size are removed.

Remove Small Parts Settings

CADTools toolbar > Remove Small Parts > Settings

You can modify the settings for removing small parts from models.

Procedure

To modify the remove small parts settings:

1. Click the Remove Small Parts down arrow on the CADTools toolbar.
2. Click **Settings**.
3. Make your selections as required and click **OK**.

Interface

Tolerance—Displays the maximum size below which all objects are removed. The percentage values are expressed as a percentage of the size of the object's bounding box diagonal. The unit values are expressed as unit size based on those used by the model. These values are directly related to the position of the slider. For example, dragging the slider halfway between 0% and 100% displays approximately 50%.

Scene Bounding Box—Displays the bounding box diagonal.

OK—Closes the dialog and saves the settings.

Cancel—Closes the dialog. Any changes made to the settings are lost.

Defaults—Restores the default settings.

Help—Opens the relevant Help topic.

Separating Meshes

CADTools toolbar > Separate Meshes

Using this tool, you can group an object that is grouped under one object but made up of a number of separate meshes, as separate meshes under the objects name.

Copyright © Right Hemisphere 2006. All Rights Reserved.

When created, the sub-objects are labelled 'objectname_mesh_n', where 'n' is a number with three digits of leading zero padding.

Note that this function cannot be reversed.

Procedure

To separate meshes:

1. Open a 3D file (on page 42).
2. Select the object for which you want to separate meshes.
3. Click **Separate Meshes**  on the CADTools toolbar.

The object's meshes are separated.

Joining Equal Points

CADTools toolbar > Join Equal Points
Right-click 3D viewport > Tools > Join Equal Points

This tool is used to reduce polygons by joining all the points that have equal (coincident) x,y,z coordinates. This smooths the lines and reduces the number of polygons resulting in a smaller file. Note that joining equal points processes points on an object by object basis, and does not look at coincident points between adjacent objects.

To join equal points, you must first specify the distance tolerance, as a percentage of the scene bounding box diagonal, to join all points that are found within that distance of each other. For example, if the tolerance value is 3, all points that are 3 scene units and less from each other are joined.

You can also modify the settings for joining equal points.

Note: We recommend entering a tolerance up to 5% to retain the shape of the model. Processing stops at the tolerance level that exceeds the length of the bounding box diagonal.

Procedure

To join equal points:

1. Open a 3D file (on page 42).
2. Click the Join Equal Points down arrow on the CADTools toolbar.
3. Click **Settings**.
4. Make your selections as required and click **OK**.
5. Click **Join Equal Points** .

All points within the specified distance are joined.

Join Equal Point Settings

CADTools toolbar > Join Equal Point > Settings

You can modify the settings for joining equal points within models.

Procedure

To modify the join equal points settings:

1. Click the Join Equal Points down arrow on the CADTools toolbar.
2. Click **Settings**.
3. Make your selections as required and click **OK**.

Copyright © Right Hemisphere 2006. All Rights Reserved.

Interface

Tolerance—Determines the maximum distance under which all points are joined. The percentage values are expressed as a percentage of the size of the object's bounding box diagonal. The unit values are expressed as unit size based on those used by the model. These values are directly related to the position of the slider. For example, dragging the slider halfway between 0% and 5% displays approximately 2.5%.

Scene Bounding Box—Displays the bounding box diagonal.

OK—Closes the dialog and saves the settings.

Cancel—Closes the dialog. Any changes made to the settings are lost.

Defaults—Restores the default settings.

Help—Opens the relevant Help topic.

Reducing Models

CADTools toolbar > Reduce Model

Many 3D meshes are designed for specific purposes, but need to be used in ways for which they were not originally intended. For example, a character model may have a high polygon count, and is not be suitable for a game or an online application. The Reduce Model tool can be used to reduce the polygon count of entire models or separate objects, while preserving the defining visual features.

Note: It also automatically removes degenerate triangles. That is, triangles that have two or three identical vertices.

Reducing polygonal models to a smaller number of polygons ensures that file sizes are kept small, and that less bandwidth is required for transmission. You can adjust the reduction settings on many models for improved results.

When using the reduction tool, the current model is examined and if certain components exist in the model, the appropriate reduction options are automatically selected. You can choose whether to keep these settings or modify them to your own requirements. You then process the model, select the amount of reduction you require, and apply the reduction to the model.

More memory may be required if polygon reductions take time to complete. For example, if there are many parts in a model.

Note that this function cannot be reversed.

See also Hints and Tips (on page 369).

Procedure

To reduce the number of polygons in a model:

1. Open a 3D file (on page 42).
2. Click **Reduce Model**  on the CADTools toolbar.
3. Click **Settings** and modify the settings (on page 118) as required.
4. Select the objects on which you want to reduce polygons.
5. Click **Process**. The polygon reduction is performed.

6. Select the amount of reduction (on page 117) you require. The viewport display reflects your selection.
7. Do one of the following:
   - Click **OK** to apply the reduction to the selected objects.
   - Click **Cancel** to cancel the reduction.

The objects' polygons are reduced.

Reduce Model Dialog

CADTools toolbar > Reduce Model
CADTools toolbar > Reduce Model > Process

After a reduction is processed, you can select differing reduction amounts until the optimum reduction is reached. You then apply the reduction to the selected objects. As a guide, most models can be easily reduced to a level of 20% without any leaving any visible artifacts.

There are three methods for selecting the amount of reduction:

- Using the Real-time Reduction slider.
- Entering percentage values in the Remove %, Keep %, and Keep Triangles fields.
- Using the 10%-100% buttons.

The dialog buttons differ depending on whether you have already established the reduction settings and processed the reduction.

Note: Every time you select an amount, the reduction is reflected in the model immediately.

Procedure

To open the Reduce Model dialog:

Click **Reduce Model**  on the CADTools toolbar.

Interface

Real-Time Reduction—Used to select the amount (percentage) of polygon reduction to apply to the model in one of three ways:

- **Slider**—Determines the percentage of polygons to keep. With the slider positioned to the left, no polygon are kept, and with the slider positioned to the right, all polygons are kept. The Remove%, Keep%, and Keep Triangles fields are automatically updated as the slider moves.
- **Remove %**—The percentage of polygons to remove. The slider and the Keep%, and Keep Triangles fields are automatically updated.
- **Keep %**—The percentage of polygons to keep. The slider and the Remove%, and Keep Triangles fields are automatically updated.
- **Keep Triangles**—The number of polygons to keep. The slider and the Remove %, and Keep% fields are automatically updated.
- **10%-100% buttons**—Specifies the percentage of polygons to keep. The slider and the Remove%, Keep%, and Keep Triangles fields are automatically updated.

Statistics—Displays the number of meshes that are selected for reduction.

Progress bar—Displays the name and progress of each of the reduction process' operations.

Copyright © Right Hemisphere 2006. All Rights Reserved.

Process—Prepares the model for reduction by applying the Reduce Model settings and processing the reduction. Once the processing is complete the Real-time Reduction tools are able to be used.

Note: Once the reduction is processed, you must click Cancel > Settings if you want to modify the settings again.

OK—Applies the process, closes the dialog, and saves the settings.

Settings—Used to open the Reduce Model Setting dialog to modify the reduction settings.

Cancel—Cancels the current process and closes the dialog, or if you have already performed the reduction, closes the dialog.

Help—Opens the relevant Help topic.

Reduce Model Settings

CADTools toolbar > Reduce Model > Settings

Objects selected for reduction are examined by the reduction tool, and if certain components exist, the appropriate reduction options are automatically selected.

For example, if a model contains a texture map, the UV influence option is automatically selected. When the selected objects are reduced, the mapping coordinate boundaries are preserved and the texture map continues to display correctly. The examples below show a model reduced to 20% without and without UV influence. Note that the texture map is displayed correctly with the UV influence used in the reduction.

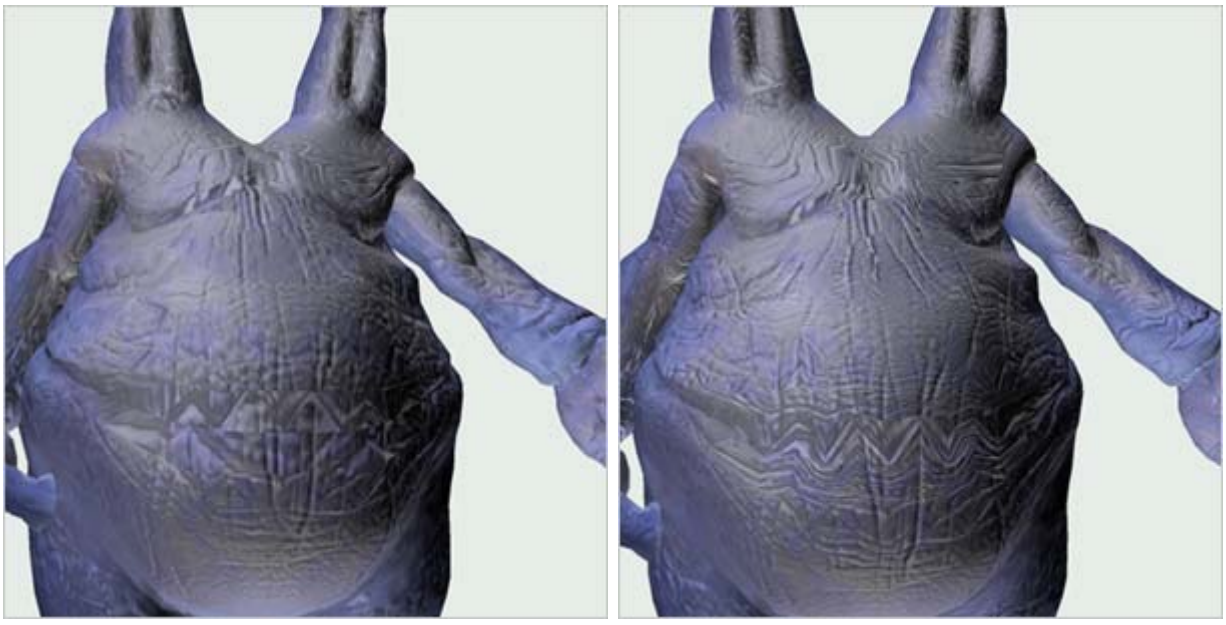

No UV influence / UV influence 0.015

You can modify these settings for the best results when reducing a model. That is, you can remove any discontinuity from reduced models, and dictate to what extent various components of the model are used in the reduction.

Note that if you choose not to use component influences during a reduction, Deep Exploration will attempt to copy any unused components from the original model, but a they may not be preserved correctly.

If you have healed a model (on page 120), you can lessen the reduction processing time by clearing the Prepare Options check boxes, as these tasks are performed during the healing process. Clearing these options significantly reduces the processing time for large models.

Procedure

To modify the reduction settings:

1. Click **Settings** in the Reduce Model dialog.
2. Modify settings as required.
3. Click **OK** to save the settings and return to Reduce Model dialog.

Note: You can click the Back button to return to Reduce Model dialog without saving your settings.

You can now process the reduction, select a reduction amount, and apply it to the selected objects.

Interface

Common Options—Used to establish mesh settings.

- **Enable suffix**—Appends the suffix displayed in the text field and the percentage of reduction to the mesh name. This is helpful in identifying models with reduced polygon counts. For example, if you enter 'reduced by' in the suffix field, it is appended to the mesh as 'reduced by xx%' where 'xx' is the percentage reduction.
- **Skip hidden meshes**—Processes visible meshes only.
- **Create new meshes**—Creates new polygon reduced meshes and hides existing meshes. The newly created meshes are displayed in the Scene tree. If you selected the Enable suffix field, the suffix is appended to the mesh names.

Note: The existing meshes are overwritten with the reduced polygon mesh if this option is not selected.

- **Normalize meshes**—Scales small mesh objects to reduce the display of geometric artifacts and minimize floating point errors. This is helpful when a model is very small or very large, or when the polygon reduction process is slow.

Prepare Options—Used to join vertices, normals, UV, and colors to prevent discontinuity. These options preserve edges and increase the display quality of models.

- **Join vertices**—Merges vertices, if they are contained in the model, based on the distance between them. This prevents 'cracks' and 'holes' if points that are different are close to each other and the polygon count is low. Increasing this value decreases any cracks or holes in reduced models. This option works equally well on large and small models.
- **Join normals**—Merges normals based on their angle, if they are contained in the model.
- **Join UV**— Merges UVs based on the distance between them, if they are contained in the model.
- **Join colors**—Merges colors if they are contained in the model.

Reduce Options—Used to define to what extent the model's components are taken into account during the reduction process. Increasing these values minimizes errors by applying a lesser reduction.

- **Normals influence**—Uses normals to influence the reduction, if they are contained in the model, based on the specified value.
- **UV influence**—Uses UVs to influence the reduction, if they are contained in the model, based on the specified value. For example, a model may have UVs, but if there is no texture on the model the UVs are not needed. Therefore, you can disable the UV influence for a higher quality reduction.
- **Material influence**—Uses materials to influence the reduction, if they are contained in the model, based on the specified value.
- **Colors influence**—Uses colors to influence the reduction, if they are contained in the model, based on the specified value.

Copyright © Right Hemisphere 2006. All Rights Reserved.

OK—Saves the current settings.

Cancel—Cancels the process and closes the dialog. Any changes made to the settings are lost.

Defaults—Restores the default settings.

Help—Opens the relevant Help topic.

Healing Models

CADTools toolbar > Heal Model

The Healing tool is used to repair models that contain disjointed faces, cracks, overlapping geometry, and duplicated edges. These features are displayed as extra lines or gaps when viewing or rendering models as illustrations.

Note: Models that require healing are often a result of poor tessellation.

The healing process welds disjointed faces together to create a single object. Additionally, it mends cracks between poorly joined sections, overlapping geometry, and duplicated edges.

For example, the model of a fishing reel displays additional lines; this illustrates objects containing disjointed faces. Once the model has been healed, the disjointed faces disappear from view.

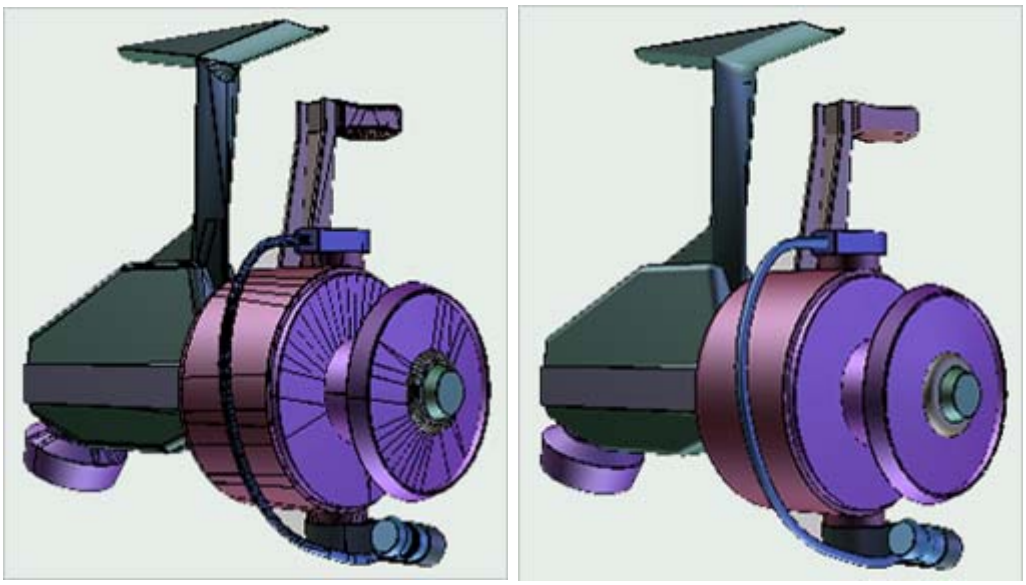

Model with disconnected faces / Model with connect faces after healing

We recommend that the Healing tool is used before the Reduce Model or Unify Normals tools as it repairs the model and improves the quality of the resulting model.

Note: Healing very large models may slow down the process.

Procedure

To heal a model:

1. Open a 3D file (on page 42).
2. Click **Heal Model**  on the CADTools toolbar.
3. Click **Settings** and modify the settings (on page 121) as required.

4. Select the objects that you want to heal.
5. Click **Process**.

The objects are healed.

Heal Model Dialog

CADTools toolbar > Heal Model
CADTools toolbar > Heal Model > Process

The Heal Model dialog displays the status of the healing process and statistics about the model.

Interface

Statistics—Displays the number of meshes to be healed.

Process—Processes and applies healing to the selected objects.

Settings—Used to open the Heal Model Setting dialog to modify the healing settings.

Cancel—Cancels the current process and closes the dialog, or if you have already performed the healing, closes the dialog.

Help—Opens the relevant Help topic.

Heal Model Settings

CADTools toolbar > Heal model > Settings

You can modify these settings for the best results on specific models. That is, you can dictate to what extent various components of the model are used in healing.

Procedure

To modify the healing settings:

1. Click **Settings** in the Heal Model dialog.
2. Modify the settings as required.
3. Click **OK** to save the settings and return to the Heal Model dialog.

Note: You can click the Cancel button to return to the Heal Model dialog without saving your settings.

You can now perform healing and apply it to the selected objects.

Interface

Meshes—Used to establish mesh settings.

- **Skip hidden meshes**—Processes visible objects only.
- **Combine faces to object**—Combines several objects, in the lowest branch of the scene tree, together to create one object. For example, one object has been imported as many parts. The healed objects have the suffix, _healed, appended to the text field.

Note: If the model contains multiple objects with their own animations, the animations are combined into a single object and are not retained. This may adversely affect the resulting animation.

Copyright © Right Hemisphere 2006. All Rights Reserved.

- **Create new meshes**—Creates new healed objects. The newly created objects reflect the structure of the existing objects and are displayed in the Scene tree.

Healing Tolerances—Used to establish healing threshold settings. These values are displayed in percent and in units.

- **Vertices**—Determines the maximum distance allowed between two vertices. Values under this threshold will result in the two vertices being joined. The percentage values are expressed as a percentage of the size of the object's bounding box diagonal. The unit values are expressed as unit size based on those used by the model.
- **Edges**—Determines the maximum distance allowed between a vertex and edge. If the distance is less than the threshold value then the vertex is collapsed into the edge. The percentage values are expressed as a percentage of the size of the object's bounding box diagonal. The unit values are expressed as unit size based on those used by the model.

OK—Applies the settings and returns to the Heal Model dialog.

Cancel—Cancels the process and closes the dialog. Any changes made to the settings are lost.

Defaults—Restores the default settings.

Help—Opens the relevant Help topic.

Converting to Double-Sided

CADTools toolbar > Convert to Double-Sided
Right-click 3D viewport > Tools > Convert to Double-Sided

Polygons are usually only rendered from one direction; the direction defined by their surface normals. Because of this many models, especially CAD models that contain ribbon or strip-type geometry, may display invisible polygons when they are rotated. That is, they may not display an opposing surface.

Converting polygons to double-sided, duplicates an object’s polygons to display the same surface on the front and back faces of the object.

Note that this function doubles the number of polygons and, after you save a model that has been converted to double-sided, you cannot retrieve the original polygon information. As such, it may be more efficient to apply back-facing geometry to a material, or use CTRL+H to turn 'on' the back faces.

Procedure

To convert objects to double-sided:

1. Open a 3D file (on page 42).
2. Select the objects for which you want to convert.
3. Click **Convert to Double-Sided** .

The objects' polygons are converted.

Exploding Objects

CADTools toolbar > Explode Objects

CAD operators typically design an assembly in a static assembled mode. However, illustrators often require an exploded view of the model and its parts. Exploding models clearly displays assemblies in a traditional illustration style.

The Explode Objects tool is useful for generating 2D illustrations and dynamic 3D documents. Animated explosions can also be created for electronic display, which can be useful for displaying relationships between parts and, when manually sequenced can represent actual assembly and disassembly instructions. You can also modify the settings for exploding objects.

To explode objects, you must first specify a number of settings (on page 123). After the explosion is created, an 'Explode' sequence (on page 102) is created, and the animation controls (on page 254) can then be used to view the animation. Each subsequent exploded animation that is created overwrites the existing Explode sequence and animation. However, creating an exploded animated without stages does not overwrite an existing exploded animation that was created with stages.

Note: Sub-assemblies are not recognized if they are a group of parts of differing shapes when exploding objects.

See also Hints and Tips (on page 369).

Procedures

To explode objects:

1. Open a 3D file (on page 42).
2. Click the Exploded Objects down arrow and click **Settings**.
3. Make your selections as required and click **OK**.
4. Click **Explode Objects** .

The objects are exploded.

To create an animated explosion:

1. Open a 3D file.
2. Click the Exploded Objects down arrow and click **Settings**.
3. Select the 'Create animation' check box.
4. Make your selections as required and click **OK**.
5. Click **Explode Objects** .

The animation is exploded and the 'Explode' sequence is created.

To delete an exploded animation:

1. Open the file from which you want to delete a sequence.
2. Open the Animation Options dialog (on page 255) and select the 'Explode' sequence in the Sequence window.
3. Click **Delete**.

The sequence is removed from the sequence list and the explosion is deleted.

Explode Objects Settings

CADTools toolbar > Explode Objects > Settings

You can modify the settings for exploding objects out from models.

Copyright © Right Hemisphere 2006. All Rights Reserved.

Procedure

To modify the explode objects settings:

1. Click the Explode Objects down arrow and click **Settings**.
2. Make your selections as required and click **OK**.

Interface

Precision—Selects the precision of the calculation in terms of speed versus quality. The quality is measured by the compactness of the resulting exploded elements. For example, if you explode a model at high quality, the parts are exploded, but are tightly grouped.

Direction—Used to determine the direction of the exploded objects.

- **All directions**—Explodes the objects out from every direction.
- **XY plane**—Explodes the objects out from the XY plane.
- **XZ plane**—Explodes the objects out from the XZ plane.
- **YZ plane**—Explodes the objects out from the YZ plane.
- **Constrain to XYZ axes**—Explodes the objects out from the XY and Z axes.
- **Smart axis**—Explodes the objects out from the most correct axis for each object, based on the object's shape. That is, any objects that are found to have equal bounding box dimensions (square) are moved in the direction perpendicular to the square face of the bounding box. This function overrides the plane settings and the path along which the objects are moved may be on a different plane than the one currently selected. For example, a number of 'bolt' objects that have hexagonal heads, also have a square bounding box each, and are therefore moved together along the same axis.

Animation—Used to create an animated explosion and set animation options.

- **Create animation**—Creates an animated explosion.
- **Create animation sequence for each stage**—Creates an animation sequence for each stage of an explosion sequence.
- **Duration**—Determines the duration in seconds of the animation sequence.
- **Stages**—Determines the number of stages for the animation sequence. For example, if there are 90 objects exploded from the model and you select 3 stages, the objects are exploded in groups of 30. If you select 90 stages, the objects are exploded one by one.
- **Order**—Determines the order in which to explode the objects - by distance or size. If you select Distance, objects furthermost from the centre of the model are exploded first, and then objects closer to the model, and so on. If you select Size, the smallest objects are exploded first.

OK—Closes the dialog and saves the settings.

Cancel—Closes the dialog. Any changes made to the settings are lost.

Defaults—Restores the default settings.

Help—Opens the relevant Help topic.

Coloring Objects

CADTools toolbar > Color Objects

The color objects tool is used to apply different colors to adjacent objects. This helps identify objects that may not appear to be separate. For example, a set of connected pipes consists of separate objects, where each of these objects looks similar to it's adjacent object. Coloring the objects different colors, clearly shows the individual objects.

You can also modify the settings for coloring objects.

Note: If there are more objects than colors, the same color is applied to multiple objects.

Procedure

To color objects:

1. Open a 3D file (on page 42).
2. Click the Color Objects down arrow and click **Settings**.
3. Make your selections as required and click **OK**.
4. Click **Color Objects** .

The objects are colored.

Color Objects Settings

CADTools toolbar > Color Objects > Settings

You can modify the settings for coloring objects within models.

Procedure

To modify the color objects settings:

1. Click the Color Objects down arrow and click **Settings**.
2. Make your selections as required and click **OK**.

Interface

Object Color—Used to establish the colors to apply to objects in the scene.

- **Number of colors**—Determines the number of colors to apply to the objects.
- **Color Selection**—Used to select the colors to apply to the objects.
  - **Color [1 - 10]**—Opens the color selector and is used to select the colors to apply. The colors are ignored for any option that is greater than the number of colors specified in the 'Number of colors' option.
- **Override face color**—Overwrites the objects' existing colors with the new colors.

OK—Closes the dialog and saves the settings.

Cancel—Closes the dialog. Any changes made to the settings are lost.

Help—Opens the relevant Help topic.

Copyright © Right Hemisphere 2006. All Rights Reserved.

Callouts

Parts panel toolbar > Draw Callouts
Parts panel toolbar > Export BOM
Parts panel toolbar > Remove Callouts
Parts panel toolbar > BOM Source

Callouts are used to direct attention to, and identify parts of a model. A callout consists of an assigned part identifier and a line pointing to the part. once drawn, they can be rendered to vector format using the Vector Illustration tool (on page 135).

The Callout Settings dialog is used to establish callout settings including the placement of callouts and the callout color. After callouts are created, they can be transformed (on page 127) using the 3D Editor, edited and deleted (on page 141), and rendered within the scene (on page 128). The Callout Settings dialog (on page 128) can be used to establish callout settings.

You can select the source that is used to create the Bill of Materials (BOM list) and the callouts. The list can be based on the following groups of parts:

- The current geometry of the entire scene.
- The currently selected object (on page 86) nodes.
- An external BOM file.

  Note: External BOM files are named 'xxx.bom.xml by default'.

- The parts contained within any layer (on page 139), whether the layer is referenced by a model view, step, or is simply for grouping.
- The parts contained within the file's steps (on page 164).
- The parts contained within the file's model views (on page 75).

The source settings can be modified using the BOM Settings dialog (on page 130). For example, the BOM list can be exported to an XML file; this list includes the part numbers and names and quantities of multiple copies of the same part. Initially the parts are grouped by name showing the number of parts with the same name. However, this can be changed by comparing the parts.

Callouts can be hidden and shown in the same way as other objects, via the Scene tree and 3D viewport right-click menu.

Callout Rules

Certain rules apply to callouts:

- The Parts panel (on page 288) is used to manage callouts and the BOM list.
- Callouts are markup objects and as such are displayed within the Callout Layer object in the 3D Objects list when they are created, and in the Parts panel.
- Using the 3D Objects list, you can select, hide and show callouts, group and collapse their hierarchies, and delete callouts in the same way as other objects.
- To distinguish callouts in the Callout Layer, for each duplicate part, a letter (a-z) is suffixed to the callout name in the list. For example, Callout-3, Callout-3a etc.
- Callouts are attached to objects, and so, if you create callouts on a model with animation, the callouts are also animated.
- If you use the BOM list to select callouts, the parts to which the callouts belong are also selected.
- When you rotate, scale, or pan models, the callouts move in relation to the parts while remaining the same size.
- Callouts can be moved, rotated, and scaled separately from the model.
- For callouts to be displayed on an image or model, the Show Markups command must be selected from the Display menu.

- The Parts panel displays only the objects that are part of the selected BOM source. For example, if you select a layer as the source, only those parts contained within that layer are used to create the BOM.

Procedures

To create callouts:

1. Open a 3D file (on page 42).
2. Open the Callout Settings dialog (on page 128) and make the selections you require.
3. Click **BOM Source**  on the Parts panel.
4. Do one of the following:
   - Click **Scene Geometry** to base the BOM list on the current scene geometry.
   - Click **Currently Selected Nodes** to base the BOM list on the selected object nodes.
   - Click **External BOM** to base the BOM list on the associated external BOM .xml file.

     Note: You must select the 'Automatically load BOM files' check box in the BOM Settings dialog to base the BOM list on an external BOM file, if one exists.

   - Click a layer name to base the BOM list on the objects contained within that layer.
5. Open the BOM Settings dialog (on page 130) and make the selections you require.
6. Click **Draw Callouts**  on the Parts panel.

To export the BOM:

1. Create the callouts.
2. Click **Export BOM**  on the Parts panel.
3. Browse to the required save destination, enter a file name, and select a file type.
4. Click **Save**.

The callouts are exported and saved in the text file.

To remove callouts:

1. Open the file from which you want to remove the callouts.
2. Click **Remove Callouts**  on the Parts panel.

Copyright © Right Hemisphere 2006. All Rights Reserved.

Selecting Callouts

Viewport > CTRL+click callouts
Scene tree > Callout layer > SHIFT / CTRL+click callout names
Parts panel > CTRL+click callout names

After callouts are created, you can select them and their corresponding parts in a number of different ways: via the BOM list, the viewport, the Scene tree, and the Parts panel.

Selecting individual callouts via the BOM list is helpful if you want to see the parts and their corresponding callouts together; selecting multiple callouts via the viewport, Scene tree, or Parts panel is helpful if you want to hide or move individual callouts.

After selecting callouts, they can be exported, hidden, moved, and rendered.

Procedure

To select callouts, do one of the following:

- Click a callout in the viewport, hold down the CTRL key and click the non-adjacent callouts you want to select. The callout names are selected in the Callout Layer.

Note: If you select only one callout in the viewport, the callout name is selected in the Callout Layer and in the BOM list.

- Click a callout name in the Callout Layer of the Scene tree, hold down the SHIFT key and click the adjacent callout for the range you want to select, or hold down the CTRL key and click the non-adjacent callouts you want to select. The callouts are selected in the viewport.
- Click a callout name in the Parts panel, hold down the CTRL key and click the non-adjacent callouts you want to select. The callouts are selected in the viewport.

Rendering Callouts

Parts panel toolbar > Draw Callouts > Vector Illustration tool

Callouts can be rendered as part of the model using the Vector Illustration tool in Binary CGM format. Binary CGM is the only valid format for callouts.

Procedure

To render callouts:

1. Create the callouts (on page 126).
2. Use the Vector Illustration tool (on page 135) to render the illustration to the Binary CGM format.

Callout Settings Dialog

Parts panel toolbar > Callout Settings

The Callout Settings dialog is used to establish callout settings including the placement of callouts and the callout color.

You can also edit individual callout markups (on page 141) using the Edit Markup dialog.

Procedures

To open the Callout Settings dialog:

Click **Callout Settings**  on the Parts panel.

To modify the callout settings:

1. Open the Callout Settings dialog.
2. Make the selections you require.
3. Click **OK**.

Interface

Label—Used to select the way in which labels are generated and the label style.

- **Part ID**—Creates callouts using the part ID.
- **Part name**—Creates callouts using the part name.
- **Font**—Opens the Font dialog and is used to set the markup font type, style, and size.

Style—Used to define the style in which the callouts are displayed.

- **Rectangle**—Displays each callout in a rectangular style.
- **Oval**—Displays each callout in an oval style.
- **Text only**—Displays each callout as text only.
- **Outline text**—Displays each callout as text with an outline.
- **Width**—The width of the rectangular and oval callouts.
- **Height**—The height of the rectangular and oval callouts.
- **Always on top**—Draws the callouts on top of all the objects in the scene.

Placement—Used to define where the callouts are placed in the scene.

- **Circular**—Places callouts around the model in a circular style.
- **Object perimeter**—Places callouts close to model.
- **Rectangular**—Used to place the callouts around the model in a rectangular style. The rectangular style options become active if you select this option.
  - **Top**—Places callouts at the top of the rectangular placement.
  - **Bottom**—Places callouts at the bottom of the rectangular placement.
  - **Left**—Places callouts at the left of the rectangular placement.
  - **Right**—Places callouts at the right of the rectangular placement.
  - **Distance**—Used to define the distance between the objects and the callouts.
    - **Diameter**—Used to specify a number that places the callouts the 'distance of the object diameter multiplied by that number' out from the objects.
    - **Smart**—Places the callouts in the best possible position for the objects.
- **Combine for same part**—Combines callouts relating to identical parts into one callout with separate leaders that point to the individual parts. For example, if a model contains two parts called 'Eye', only one callout is drawn with two leaders pointing to each 'Eye' part.
- **Draw one for same part**—Combines callouts relating to identical parts into one callout with one leader that points to one of the identical parts. For example, if a model contains two parts called 'Eye', only one callout is drawn with a leader pointing to one of the 'Eye' parts.
- **Draw for invisible objects**—Draws callouts for all invisible objects.

Copyright © Right Hemisphere 2006. All Rights Reserved.

Leader head—Used to define the type of leader head to display on the callouts.

- **None**—Displays a plain leader with no head.
- **Point**—Displays a point leader head.
- **Arrow**—Displays an arrow leader head.

Color—Used to select the color in which to display the callouts.

- **Line**—Opens the color selector and is used to select the color of the callouts' lines.
  - **Object**—Displays the callouts' lines in the same color as the object.
- **Text**—Opens the color selector and is used to select the color of the callouts' text.
  - **Object**—Displays the callouts' text in the same color as the object.
- **Background**—Opens the color selector and is used to select the color of the callouts' background.
  - **Object**—Displays the callouts' background in the same color as the object.
- **Interactive draw in [number] steps**—Moves callouts in steps to the best viewing position when a model is moved in a scene. For example, if you enter 5 steps and then move the model, the callouts are re-positioned 5 times between their original viewing positions and the new ones.

Note: You cannot save the interactive state.

OK—Closes the dialog and saves the settings.

Cancel—Closes the dialog. Any changes made to the settings are lost.

Help—Opens the relevant Help topic.

BOM Settings Dialog

Parts panel toolbar > BOM Source > BOM Settings

The BOM Settings dialog is used to establish Bill of Material (BOM) settings including comparing names and geometry.

Procedures

To open the BOM Settings dialog:

Click **BOM Source**  on the Parts panel, and then click **BOM Settings**.

To modify the BOM source settings:

1. Open the BOM Settings dialog.
2. Make the selections you require.
3. Click **OK**.

Interface

Compare Nodes—Used to compare parts by name or geometry.

- **Compare names**—Compares the parts by name.
  - **Skip characters from right**—Selects a number for the characters to ignore, if you are comparing by name, beginning from the right of the part name.

  - **Include suffix (numbers only)**—Compares only the suffix (numbers only) in the part name, if you are comparing by name.
- **Compare geometry**—Compares the parts by geometry.
  - **Exact**—Treats all meshes that have equal bounding boxes and an equal number of vertices/faces as equal meshes. Otherwise, only those meshes in which everything is equal (vertices, faces, etc.) are treated as equal.

Sort Method—Used to order the parts in the Parts panel.

- **Scene order**—Orders the parts by the scene's hierarchy.
- **Alphabetical**—Orders the parts alphabetically.
- **Alphanumeric**—Orders the parts alphanumerically.

BOM File Import—Used to establish the settings to import the BOM list.

- **Automatically load .bom.xml files**—Automatically loads any associated external BOM file to use as the source to create the BOM list. Note that external BOM files are named 'xxx.bom.xml by default'.
- **Browse**—Used to browse for and select the folder in which an external BOM file is located. This file will then be associated with the file and used as the BOM list source.

BOM File Export—Used to establish the settings to export the BOM list.

- **Number of nodes in part**—Exports the number of parts that are associated with each part containing node.
- **Expand nodes**—Exports the expanded part containing nodes.

OK—Closes the dialog and saves the settings.

Cancel—Closes the dialog. Any changes made to the settings are lost.

Help—Opens the relevant Help topic.

Comparing Parts

Callouts are created relevant to the parts displayed in the BOM list. Parts can be compared in a number of ways and the BOM list displays the comparison. When the callouts are created in the viewport, the comparison can be seen in a graphical manner.

If you choose to compare by name, parts with the same name are given the same part number. If you choose to compare by geometry, parts with the same geometry are given the same part number.

For example, a model may have ten parts named consecutively from E3088271.PRT to E3088280.PRT. If you compare by name with zero characters from the right, the BOM list displays the ten part names separately with different part numbers. If you compare by name with seven characters from the right, the BOM list displays one part with a quantity of ten.

Setting	Number	Part	Quantity
By name, 0 characters	1-10	E3088271.PRT- E3088280.PRT	1 for each part number
By name, 7 characters	1	E3088	10

Copyright © Right Hemisphere 2006. All Rights Reserved.

Comparing Versioned Parts

You can compare 'versioned' parts by comparing the part names and choosing to include the suffix in the comparison. Selecting this option includes only numbers in the comparison. The comparison functions using by trimming and skipping characters as shown in the following example.

In this example, '4' is entered as the number of characters to skip from the right.

1. All parts with the same name are compared. In this example, part a=GTUB.1213222 and part b=GTUB.1212.
2. The part with the shortest suffix is set apart. Part a=GTUB.1212.
3. The other part suffixes are trimmed to the same number of characters as that part. Therefore, part a becomes the same length as part b, part a=GTUB.1213, and the number of characters trimmed is 3.
4. If the number of characters skipped is more than the number of characters trimmed, the part suffix characters are trimmed one by one until they equal the skipped number of characters. Here, skipped characters = 4 and trimmed characters = 3, so one more character is trimmed from both parts. Now part a=GTUB.121 and part b=GTUB.121. Therefore, they are grouped together in the callouts and the BOM list.

This continues for as many times as the number of characters skipped minus the number of characters trimmed. If the comparison is equal, part a is compared with part c and so on.

If, when trimming one character at a time, the character to be trimmed is an alpha, the comparison ends immediately.

Embedding Content

2D and 3D content can be embedded into PowerPoint spreadsheets, Word documents, FrameMaker documents, and Excel spreadsheets, using the files themselves or using the item links.

Links are dynamic, in that they are linked to the most recent version of the item. So if you embed a link into an Office document and the related file is modified, you can upload the most recent version (on page 178) of the file to Deep Exploration and the document link is automatically updated.

Note: To embed 3D content, you must have Deep Publish (http://www.righthemisphere.com/deeppublish) installed on your computer.

Here, we describe embedding content using the files. To embed content using the item links, please see the Deep Publish User Reference (Start > Programs > Right Hemisphere > Deep Publish > Help).

Procedure

To insert a file into a document:

1. Open a new or existing Word or FrameMaker document, or a PowerPoint or Excel spreadsheet.
2. Drag the file from the File list (on page 310) tabs into the external document.
3. If you are inserting a file for the first time, click **OK** in the Default Rendering Mode dialog to select the automatically detected graphics mode as the default.

   Note: You can modify the default graphics mode at a later date if required.
4. Save the document in the usual way for the Office application you are using.

Copyright © Right Hemisphere 2006. All Rights Reserved.

Illustration Tools

Menu bar > View > Controls and Toolbars > Illustration
Right-click menu bar > Illustration
Customize Layout dialog > Toolbars tab > Select Illustration > OK

The Illustration tools provide high quality line-art and shading for use in technical documentation for print, Web and multimedia presentations, and is ideal for companies involved with documentation of manufactured products and for presenting 3D images that are clear and concise.

Using Illustration you can create easy to understand illustrations for 3D CAD work in progress, achieve a consistent look and quality throughout documentation and able to avoid the retracing of CAD models or photos.

Using Illustration you can:

- Render to raster (on page 134) or vector (on page 135) output.
- Control of edge threshold and line weight.
- Optional use of textures, colors and default materials.
- Parts listing display (Bill of Materials).
- Use callouts (on page 126) to direct attention to, and identify parts of a model.

Raster Illustration

Menu bar > Rendering toolbar > Renderer Properties
Illustration toolbar > Raster Illustration

Using the Raster Illustration tool, you can create a raster illustration for the current scene and save to various different file formats (on page 374). Scenes are either rendered directly to the active viewport or saved to file based on the settings established using the Properties dialog (on page 215).

You can also choose to display the rendered scene in a separate window via the renderer output settings (on page 215).

Procedure

To render a scene as a raster illustration:

1. Open a 3D file (on page 42).
2. Click the arrow next to the Raster Illustration tool.
3. Do one of the following:
   - Click **To Viewport** to render the scene directly to the active viewport or to a separate window.

     Note: You cannot save the rendered file.

   - Click **To File**.
4. Click **Raster Illustration**  on the Illustration toolbar.
5. Make the selections you require.
6. Click **Render**.
7. If you selected to display the statistics, click Close to close the dialog after the rendering is complete.
8. Click **OK**.

9. Do one of the following:
   - If you are saving the file, navigate to and select a location in which to save the illustration, enter a name and select a file format, and then click **Save**.
   - If you are rendering to the viewport, click **OK**.

Vector Illustration

Illustration toolbar > Vector Illustration

Using the Vector Illustration tool, you can create a vector illustration for the current scene and save it to various different file formats (on page 374).

You can establish a number of vector rendering settings using the Vector Illustration dialog including line thickness, wireframe display, callout rendering, and parts listing inclusion. The options displayed differ depending on the file format you select.

Please note that outlines (feature lines) are exported as curves (a solid representation) in the following situations:

- When rendering to the SVG and AI formats.
- If the scene includes solids.

Otherwise, all polygonal models export outlines as polylines (a series of line segments). For all other formats, geometry is imported as meshes.

Procedure

To render a scene as a vector illustration:

1. Open a 3D file (on page 42).
2. Click **Vector Illustration**  on the Illustration toolbar.
3. Select a file format, in which to save the illustration.
4. Click **Browse**, navigate to and select a location to save the illustration.
5. Enter a name for the illustration and click **Save**.
6. Make the selections you require.
7. Click **Advanced** if you want to make further advanced selections.
8. Make the selections you require and click **OK**.
9. Click **Render**. The illustration is saved immediately.
10. Do one of the following:
    - Click **Cancel**.
    - If the you chose to leave the dialog displayed, continue making selections to render the scene again, and then click **Cancel**.

Interface

File—Displays the location and name under which the illustration is saved.

Note: The default illustration file details, including the location, are identical to that of the original file, excluding the extension.

Browse—Used to select the location and name for the saved illustration.

Copyright © Right Hemisphere 2006. All Rights Reserved.

File format—Used to select the format in which you want to save the illustration. The options that are displayed on this and the advanced settings dialog differ depending on the file format selected.

Note: Adobe Illustrator must be used to view files rendered in the .ai format.

Lines—Used to select various line output options for the illustration.

- **Line thickness**—Determines the thickness of rendered lines. Note the following when entering a line thickness number:
  - The number is written to the destination file and is different for each file format; it is divided by 20 for the .ai, Binary .cgm, and .dxf formats, and is written 'as it is' to the ASCII .cgm and .swf formats.
  - If you enter 0 (zero), lines are created as 1 divided by infinity. That is, absolutely thin.
  - Numbers below 5 ensure the model is rendered in a readable way for the .dxf file format.
  - Changes in line thickness in .ai, .cgm, and .svg files cannot be viewed in Deep Exploration.
- **Tolerance angle (degrees)**—Determines the degree of angle tolerance for all rendered outlines. If the angle between two adjacent faces is greater than this value, then the edge between these faces is treated as an outline edge.
- **Calculate intersections** (on page 137)—Draws lines along all face-face intersections. Vectors are normally calculated using triangle edges. If the lines of intersection fall outside of triangle edges where geometry or objects intersect each other, this option can be used to calculate the triangle intersections and output them as vectors.
- **Allow self-intersections**—Tests all mesh faces for intersection. Not using this option ensures only faces of different meshes are tested for intersection. For example, if two faces belonging to Mesh1 intersect, the line appears only if this option is selected. If two faces intersect, with the first face belonging to Mesh1 and the second to Mesh2, the intersection line is drawn regardless of this option setting. We recommend not using this option.
- **Remove hidden lines**—Removes lines that are hidden by the geometry. For example, a Z-buffer. This is usually what is required for rendering. However, at times you may want a see-through effect. We recommend selecting this option.
- **Show as wireframe**—Causes all edges to be treated as outline edges. The tolerance angle setting becomes redundant when this is selected.

Colors—Used to select the colors to use in the illustration.

- **Object**—Uses the object's color for the rendered lines.
- **Line**—Used to open the color selector and select a color for rendered lines. This option is only available if the Object check box is not selected.
- **Background**—Used to open the color selector and select a background color. This option is only available if you are rendering to the .swf format.

Canvas Size—Used to specify the illustration's canvas size. These options are only available if you are rendering to the .tiff format.

- **Width**—The width of the illustration in pixels.
- **Height**—The height of the illustration in pixels.
- **Constrain proportions**—Maintains the width and height proportions of the original scene.

Include callouts—Includes callouts in the illustration.

BOM—Used to determine if and where the BOM is placed on the illustration.

- **None**—Excludes the BOM from the illustration.
- **Text file**—Saves the BOM as a separate text file.
- **Bottom**—Places the BOM at the bottom of the illustration.
- **Right**—Places the BOM at the right of the illustration.

Close dialog when complete—Closes the dialog as soon as the process is complete.

Render—Applies the rendering settings to the file. The progress bar indicates how far the process has progressed.

OK—Closes the dialog and applies the settings. Any changes made to the settings are saved.

Cancel—Cancels the current process and closes the dialog, or if you have already rendered the file, closes the dialog.

Defaults—Resets all settings to their default values.

Help—Opens the relevant Help topic.

Calculating Intersections

Vectors are normally calculated using triangle edges. You can use the Calculate Intersections option to calculate where triangle intersections are located and output them as vectors if the lines of intersection fall outside of triangle edges when geometry or objects intersect each other. That is, you can draw lines along all face-face intersections.

In the first example, the lines representing the intersection of the spokes with the rim (the inside of the wheel) have not been drawn. Using Calculate Intersections in the second example, the lines have been drawn.

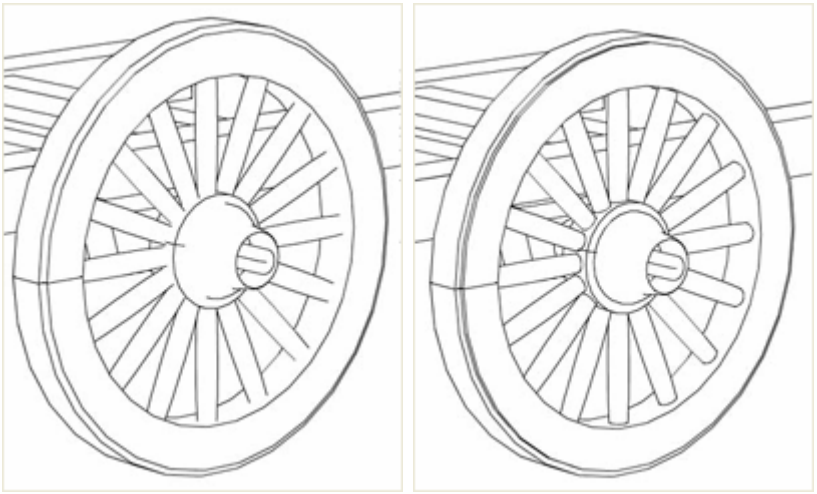

Without calculated intersections / Calculated intersections

Advanced Settings

Illustration toolbar > Vector Illustration > Advanced Settings

The Advanced settings dialog is used to control advanced render settings for Vector Illustration including callout circles, creating.html files, and print options.

We recommend that you only modify the Raster/Vector File and Line Filtering settings, and use the default settings for all other options.

Interface

Hide back-facing geometry—Hides any back-facing geometry. This option ensures that the faces/polygons that you cannot see from the current view are not rendered therefore increasing processing speed.

Copyright © Right Hemisphere 2006. All Rights Reserved.

Callout Circles—Used to select the number of sample lines used to draw the callout circles. The greater the number of lines drawn, the smoother the callout circles.

Note: This option is not available when rendering to the .svg format.

- **Samples**—Determines the number of lines to sample.

HTML File—Used to choose whether an .html file is created when rendering to the .swf format.

- **None**—Prevents the creation of an .html file.
- **Create**—Creates an .html file.
- **Create and open**—Creates an .html file and displays it in your default browser.

Raster/Vector File—Used to select options relating to the creation of a 'hybrid' image file when rendering to the .svg format. This allows you to interact with the BOM and callouts. For example, when you click an object in the BOM, the associated callout is highlighted. Hybrid files comprise a vector .svg image and a raster .png image and they have a '.svg.png' extension. A .svg file is also created when you render to a hybrid file.

Note: Only the raster or vector component of a hybrid file is displayed when you view it in Deep Exploration. To view the entire hybrid image, you must use a Web browser.

- **None**—Creates a single image type file. A hybrid file is not created.
- **Render Software Z-buffer**— Creates a hybrid file using the Software Z-buffer renderer.
- **Render Raytracer**—Creates a hybrid file using the Raytracer renderer.
- **Raster image size scale**—The amount used to scale the hybrid file image. For example, if you enter 1, the new image is the same size as the original viewport image. If you enter 2, the new image is double the size of the original viewport image.

Line Filtering—Used to establish line filtering settings for the rendered file.

- **Filter lines**—Removes any duplicated and/or unnecessary additional lines that may be displayed in the rendered file.
- **Tolerance**—Determines the tolerance to apply when filtering lines. A low tolerance value removes a small number of lines and results in a slow processing speed. A high tolerance value removes more lines and therefore, the faster processing speed is faster.

Print output—Used to establish the print settings when rendering to the .eps format, that are applied when the illustration is printed.

- **Paper size**—Scales and draws the rendered image to fit on the selected paper size.
  - **Custom size**—The custom width and height for the printed image in points. This option is only available if you use a custom paper size.
- **Landscape**—Renders the image with a landscape orientation.

  This option is unavailable if you use a custom paper size.

- **Adobe**—Renders the image to be compatible with Adobe applications.

  This option is unavailable if you use a custom paper size.

Image Resolution

- **Horizontal**
- **Vertical**

OK—Closes the dialog and applies the settings. Any changes made to the settings are saved.

Cancel—Cancels the process and closes the dialog. Any changes made to the settings are lost.

Defaults—Resets all settings to their default values.

Help—Opens the relevant Help topic.

Layers

Scene Components panel > Layers

Layers are used to arbitrarily group scene objects into a single hierarchy level and so provide an alternate way to group, manage, and display scene geometry and elements. That is, layers are not related to the scene's hierarchy. For example, a scene could contain an electrical wiring and a plumbing layer. This allows for rapid editing and scene control, and easy management of complex scenes.

For example, grouping components common to a particular function may not be possible by assembly hierarchy in a model of an engine compartment. The model may contain multiple assemblies also just parts of other assemblies. It may be convenient to place all the engine compartment components in one layer for easy display optimization when the cover is in place.

Layers function in the following manner:

- Layers are created either when a file is imported or by selecting objects and then creating a new layer.
- You can then modify the layers properties and the objects within them.
- You can group unrelated objects into a layer. For example, a single layer could contain various parts of the model, callouts, and lights.
- You can add all objects that occur in the same hierarchy level (on page 318) to a layer. This is helpful when creating layers that you want to be made from objects that are at the same hierarchy level. For example, if you have an object with three sub-objects each of which is made of four parts. You can select the three sub-objects automatically by selecting them at the same level.
- You can select all objects that are associated with a layer.
- Layers can be saved within .rh version 4.0 files (on page 478).
- You can modify layers that were created when a file was imported.
- When importing a scene with bones, a new layer is created and all bones are assigned to that layer.

The Layers Panel (on page 289) is used to create new layers and modify the layer display. Using the right-click menus (on page 341) you can delete layers, add and remove objects, and modify the layer properties (on page 342).

Note: When you create a model view (on page 75), an associated layer comprising the currently visible objects is also created.

Procedures

To create a layer:

1. Select the objects in the scene.
2. Open the Layers panel.
3. Click **Create** .

The layer is created containing the selected objects.

To delete a layer, do one of the following:

In the Layers panel, right-click the layer you want to delete and click **Delete**.

Copyright © Right Hemisphere 2006. All Rights Reserved.

To add objects to a layer:

1. Select the objects in the scene.
2. Right-click the layer to which to add the objects and then click **Add Selected Objects**.

To remove objects from a layer:

- In the Layers panel, right-click the layer you want to remove all objects and click **Remove All Objects**.
- In the Layers panel, right-click the object you want to remove and click **Remove From Layer**.

To edit a layer name:

- In the Layers panel, right-click the layer you want to edit and click **Rename**.
- In the Layers panel, click the layer you want to edit and press F2.

To duplicate a layer:

In the Layers panel, right-click the layer you want to duplicate and click **Duplicate**.

To toggle the display between layers:

In the Layers panel, click **Unique** , and then click the different layers.

To select objects associated with a layer, do one of the following:

Click the layer in the Layers panel for which you want to select the objects.

Markups

Various markups can be used to direct attention to, and identify parts of a model. The markup types include:

- Callouts (on page 126): created using the Illustration tools. They comprise a text circle with an assigned part number and a line pointing to the part.
- Dimensions (on page 145): created using the Measurement tools. They comprise white and red lines denoting where the measurement was made with text denoting the actual dimension.
- PMI markups (on page 194): created using the PMI tools. They comprise a text circle with an assigned part number and a line pointing to the part.
- Teamwork markups (on page 167): created using the Teamwork tools. They comprise a text circle with an assigned part number and a line pointing to the part.

Individual markups can be edited using the Edit Markup dialog. You can also transform (on page 90) (move, rotate, and scale) markups using the 3D Editor tools (on page 295). For markups to be displayed on an image or model, the Show Markups command must be selected from the Display menu.

Editing Markups

Double-click markup in viewport, 3D Objects list or Layers list
Right-click markup in viewport, 3D Objects list or Layers list > Object Properties

Individual markups can be modified after they are created using the Edit Markup dialog. The tabs and options differ depending on the type of markup you are editing. For example, you can modify the font type and line color of callouts using the Callout tab.

Any editing you perform using this dialog is applied to the selected markup only, and for all new markups subsequently created. Note that you can make global changes to PMI markups via the PMI Settings dialog (on page 303).

Procedure

To edit a markup:

1. Do one of the following:
   - Double-click the markup you want to edit in the viewport, 3D Objects list, or Layers list.
   - Select the markup you want to edit, right-click over the markup or in the viewport and click **Object Properties**.

   Note: Double-clicking a URL markup opens the URL address in the browser; we recommend double-clicking these markups in the 3D Objects list for editing.
2. Make the selections you require.
3. Click **Apply** and then click **OK**.

Copyright © Right Hemisphere 2006. All Rights Reserved.

Callout Tab

Edit Markup dialog > Callout tab

The Callout tab is used to adjust the appearance of callouts including the leader style, the size of the circle or wide circle leader, and the appearance of the text.

Interface

Line end—Used to select the leader style for the note markup.

Line color—Used to open the color selector and select a color for the markups lines.

Size slider—Determines the size of the circle and wide circle not markups.

Font—Opens the Font dialog and is used to set the markup font type, style, and size.

Text color—Used to open the color selector and select a color for the markup text.

Background color—Used to open the color selector and select a color for the markup background.

Topmost—Draws markups on top of all objects. Selecting this option ensures that when you rotate the model, the markups are always displayed on top.

User name/date stamp—Displays the user, date, and time information within the markup.

Text window—Used to enter text for note and URL markups.

URL—Used to enter a URL address for the URL markup. This field is only active for URL markups.

OK—Closes the dialog and applies the settings. Any changes made to the settings are saved.

Cancel—Cancels the process and closes the dialog. Any changes made to the settings are lost.

Apply—Applies the settings.

Help—Opens the relevant Help topic.

Dimension Tab

Edit Markup dialog > Dimension tab

The Dimension tab is used to adjust the appearance of measurements including the displaying the dimensions, measurement of arcs or circles, and the units in which to display the angle.

Interface

General—Used to establish general settings.

- **Always on top**—Draws the dimension and dimension lines on top of all the objects in the scene.
- **Draw construction lines**—Draws the red construction line between the points that are being measured.
- **Draw surface features**—Draws the surface features. These include the vertices, highlighted edges, and surfaces.
- **Precision**—Determines the number of decimal places to display in the dimension.
- **Display Dimension**—Used to establish how to display the dimension.
  - **Vectors**—Draws the dimension as a vector.

- **Billboards**—Draws the dimension as a billboard. That is, the dimension rotates to always face the camera. When printed to a vector-based file, the measurement is converted to vector line art.

Arcs—Used to establish the dimension to measure when measuring arcs or circles.

- **Radius**—Measures the circle's radius.
- **Diameter**—Measures the circle's diameter.

OK—Closes the dialog and applies the settings. Any changes made to the settings are saved.

Cancel—Cancels the process and closes the dialog. Any changes made to the settings are lost.

Apply—Applies the settings.

Help—Opens the relevant Help topic.

Markup Tab

Edit Markup dialog > Markup tab

The Markup tab is used to adjust the appearance of markups including markup component colors and any text that displays in the markup.

Note that the options differ depending on the markup you are editing. For example, you can edit the font for note and Teamwork URL markups, and you can move the position of line and shape markups.

Interface

Line end—Used to select the leader style.

Line color—Used to open the color selector and select a markup line color.

Size slider—Determines the size of the circle and wide circle note markups.

Font—Opens the Font dialog and is used to edit the font type, style, and size.

Text color—Used to open the color selector and select the text color.

Background color—Used to open the color selector and select the background color.

Display—Used to change the display settings for a specific markup.

Always on top—Draws markups on top of all objects. This ensures that when you rotate the model, the markups are always displayed on top.

User name/date—Displays the name of the person who created the markup, and the date and time that the markup was created.

Text window—Used to enter markup text.

URL—Used to enter a URL address for the URL markup.

Screen position—Used to set the position of the markup relative to the monitor screen.

- **X**—The position along the screen's X axis.
- **Y**—The position along the screen's Y axis.
- **Z**—The position along the screen's Z axis. That is, the depth axis.

Size—Used to set the size of the markup object in pixels.

- **X**—The size along the X axis.
- **Y**—The size along the Y axis.

Copyright © Right Hemisphere 2006. All Rights Reserved.

Origin—Used to set the sprite's point of origin.

- **XY**—The point of origin along the X and Y axis.
- **XZ**—The point of origin along the X and Z axis.

Material—Used to select a material to apply to the markup.

OK—Closes the dialog and applies the settings. Any changes made to the settings are saved.

Cancel—Cancels the process and closes the dialog. Any changes made to the settings are lost.

Apply—Applies the settings.

Help—Opens the relevant Help topic.

Deleting Markups

Select markup > DELETE
Right-click markup > Delete Objects

You are able to hide and delete markups easily.

Note that for markups to be displayed on an image or model, the Show Markups command must be selected on the Display menu.

Procedures

To delete a markup, do one of the following:

- Select the markup (on page 86) in the viewport, 3D Objects list or Layers list, and then press DELETE.
- Right-click the markup in the viewport, 3D Objects list, or Layers list, and then click **Delete Objects**.

Measurements

Menu bar > View > Controls and Toolbars > Measurement
Right-click menu bar > Measurements
Customize Layout dialog > Toolbars tab > Select Measurement > OK

The measurement tools allow you to measure the distance between two object elements in a scene, or for a single object element. For example, between an object's faces, arcs, and vertices. In many cases, these measurements can replace the need for 2D drawings. For example, you can add key measurements to the scene, and you can read key dimensions for manufacturing checks.

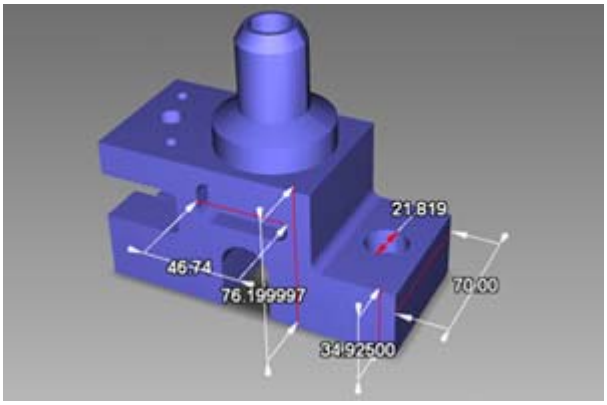

Object with multiple dimensions

When performing a measurement, the elements that can be measured within the object are highlighted when your cursor moves over them. You can limit the types of elements that are highlighted when you perform a measurement via the Object Elements toolbar (on page 147):

- **Vertices:** Green 'points' indicating a corner of a polygon where two edges meet, or of a polyhedron where three or more faces meet. A polyhedron is a three-dimensional solid bounded by polygons.
- **Edges:** Lines of intersection between two faces.
- **Faces:** Planar surfaces of a geometric solid.
- **Arcs:** Lines that curve around a face with a center point displayed in red.

The first element that is measured is displayed as bounded; this determines the bounds of the measurement. For example, the distance is not calculated past the end of an edge, or off the boundary of a face. The second measurement is unbounded. This allows you to measure the distance between a face and a plane or the extension of an edge. For example, in the image below the arc is bounded and the face is unbounded.

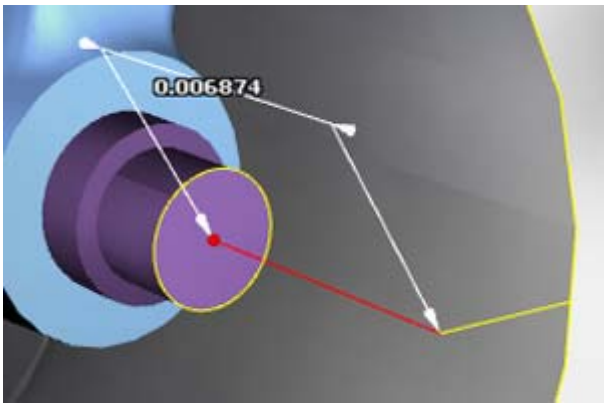

Distance measurement between an arc and a face

Copyright © Right Hemisphere 2006. All Rights Reserved.

When you perform a measurement for a single object element, the resulting values are:

- Measurement on a vertex: The position of the vertex in the scene.
- Measurement on an edge: The length of the edge.
- Measurement on a face: The area of the face.
- Measurement on an arc: The radius of the circle.

Once you perform a measurement, a dimension object is created in the scene. Dimensions are treated in the same way as other objects and can be edited and deleted (on page 141).

Various settings (on page 147) can also be applied to the measurement tools to determine the way in which the measurements are calculated and displayed.

Note: Accuracy is reduced if a model uses a high level of polygon reduction.

Measurements are automatically updated as the objects to which they are associated are moved in the scene.

Measurement Rules

Certain rules apply to measurements:

- Once a measurement is made, the related dimension object is created in the scene.
- Dimensions are markup objects and as such are displayed in the 3D Objects list when they are created.
- Using the 3D Objects list, you can select, hide and show dimensions, group and collapse their hierarchies, and delete dimensions in the same way as other objects.
- When you rotate, scale, or pan models, the dimensions move in relation to the parts while remaining the same size.
- Dimensions can be moved, rotated, and scaled separately from the model.
- For dimensions to be displayed on an image or model, the Show Markups command must be selected from the Display menu.

Procedures

To measure a single object element:

1. Click **Settings**  on the Measurements toolbar and modify the settings (on page 147) as required.
2. Click **Distance Measurement**  on the toolbar.
3. Click the element types on which you want to measure on the Object Elements toolbar.
4. Place the cursor over the area from which you want to measure until the first element is highlighted, and then click the element.
5. Move the cursor away from the model and, with no elements highlighted, click again.
6. Drag the dimension away from the model, and then click again.

The measurement is made and the dimension is created.

To measure the distance between two object elements:

1. Click **Distance Measurement**  on the Measurements toolbar.
2. Click the element types on which you want to measure on the Object Elements toolbar.

3. Place the cursor over the area from which you want to measure until the first element is highlighted, and then click the element.
4. Click other element types on the Object Elements toolbar if you want to measure between other elements.
5. Place the cursor over the area to which you want to measure until the second element is highlighted, and then click the element.
6. Drag the dimension away from the model and click again.

The measurement is made and the dimension is created.

Object Elements Toolbar

Measurements toolbar > Distance Measurement
Measurements toolbar > Angular Measurement

When you create a measurement, you use the Object Elements toolbar to display, and snap to only the object elements that you want to measure; either vertices, edges, faces, or arcs. For example, if you select Vertices and Faces on the toolbar, only those elements are highlighted in the scene.



Object Elements toolbar

The elements that can be measured within the object are highlighted when your cursor moves them.

Interface

Vertices—Displays green 'points' indicating a corner of a polygon where two edges meet, or of a polyhedron where three or more faces meet. A polyhedron is a three-dimensional solid bounded by polygons.

Edges—Displays lines of intersection between two faces.

Faces—Displays planar surfaces of a geometric solid.

Arcs—Displays lines that curve around a face with a center point displayed in red.

Cancel—Closes the toolbar and cancels the process.

Measurement Settings Dialog

Measurements toolbar > Settings

The Measurement Settings dialog is used to define the measurement settings including the display of measurement values, the type of measurement created when measuring arcs and circles, and the units in which to display angle measurements.

You can also edit individual measurement markups (on page 141) using the Edit Markup dialog.

Copyright © Right Hemisphere 2006. All Rights Reserved.

Procedures

To open the Measurement Settings dialog:

Click **Settings**  on the Measurements toolbar.

To modify the dimension settings:

1. Open the Measurement Settings dialog.
2. Make the selections you require.
3. Click **OK**.

Interface

General—Used to establish general settings.

- **Always on top**—Draws the dimension and dimension lines on top of all the objects in the scene.
- **Draw construction lines**—Draws the red construction line between the points that are being measured.
- **Draw surface features**—Draws the surface features. These include the vertices, highlighted edges, and surfaces.
- **Precision**—Determines the number of decimal places to display in the dimension.
- **Display Dimension**—Used to establish how to display the dimension.
  - **Vectors**—Draws the dimension as a vector.
  - **Billboards**—Draws the dimension as a billboard. That is, the dimension rotates to always face the camera. When printed to a vector-based file, the measurement is converted to vector line art.

Font—Opens the Font dialog and is used to set the markup font type, style, and size.

Arcs—Used to establish the dimension to measure when measuring arcs or circles.

- **Radius**—Measures the circle's radius.
- **Diameter**—Measures the circle's diameter.

OK—Closes the dialog and saves the settings.

Cancel—Closes the dialog. Any changes made to the settings are lost.

Help—Opens the relevant Help topic.

High Dynamic Range Images

High dynamic range images (HDRI) differ from conventional images (tone-mapped images) in that they store information about how much energy reaches a pixel, whereas conventional images store a color at each pixel, allowing you to view images at differing exposure levels. So, HDRIs can contain detail in the very dark and in the very light portions of the image. Hence the name High Dynamic Range.

A number of HDR formats are supported (on page 374), for example .exr and .hdr files, and certain .tiff variants. When you open an HDR file, resolution controls are displayed in the Information bar, that allow you to adjust the parts of the image.

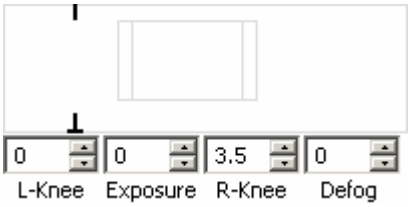

HDR Resolution Controls

You can create a high dynamic range image (HDRI) from a sequence of images.

Note: Much of the following information is from the OpenEXR Web site (http://www.openexr.com).

F-Stop

The term 'f-stop' is a way to express relative amounts of light. F-stops are the base-2 logarithm of the ratio between two light intensities.

The term is derived from the lens aperture in photographic cameras. For a lens with focal length L, and an iris with diameter D, the aperture, f, is L/D. Most photographic lenses have a an adjustable iris; the adjustment ring usually has stops that can be felt when the ring is moved. On the ring, each stop is marked with the corresponding value of f. Customarily, some subset of the following range of f values is marked: 1, 1.4, 2, 2.8, 4, 5.6, 8, 11, 16, 22, 32, 45, 64. The ratio between one value and it successor is close to the square root of 2, which means that from one f-stop to the next, the area of the iris opening, and thus the amount of light passing through the iris, varies by a factor of 2.

When we say that an image has a dynamic range of 10 f-stops, we mean that the ratio between the brightness of the brightest and the darkest part of the image is the same as the between the amounts of light passing through a lens at two aperture settings 10 f-stops apart. In other words, the ratio between the brightest and darkest parts is two to the tenth power, or 1024.

L-Knee and R-Knee

Allows you to compress the dynamic range of the original image so that a wider range of pixel values can be displayed without clipping. Values below knee low remain untouched. Values between knee low and knee high are compressed into the range [knee low, middle gray + 3.5 f-stops]. Values above knee high are clamped.

Exposure

The possible range of pixel values is conceptually infinite for HDRIs. The pixels simply represent the luminance values that were present in the scene when the image was recorded.

In most HDR images, there is no easily identifiable maximum value that should be mapped to a display's 'white' (on page 150). We map HDR pixel values to low dynamic range (LDR) display values using a process that is similar to choosing the right exposure for a photo:

Copyright © Right Hemisphere 2006. All Rights Reserved.

In conventional photography, with film, correctly exposing an image puts a 'middle gray' object with 18% reflectance in the middle of the film's usable dynamic range. 18% is an approximation of the average reflectance of an average scene. (Kodak and other companies sell 18% gray for exposure measurements). For example, .exr display assumes that a pixel value of 0.18 represents 18% gray, and computes the correct 'exposure' by placing this value in the middle of the display's usable dynamic range, that is 3.5 f-stops darker than the display's maximum white.

You can make an image brighter or darker by adjusting the exposure. The units on the exposure slider are f-stops. Increasing the exposure by 1.0 doubles the image's overall brightness, and decreasing the exposure reduces the brightness.



Exposure 0.0 / Exposure -0.5

Defog

When an image is recorded, stray light in the camera causes slight fogging of the image, which reduces the image's dynamic range. Note that fogging adds a small amount of unwanted light to the entire image.

Cameras are designed to reduce stray light enough to make fogging of a correctly exposed LDR image invisible. However, if an image contains very bright regions, fogging does become noticeable, especially if .exr display's exposure is set very high.

Defogging attempts to remove some of the fog by computing an image's average color, multiplying this color by some small number (adjustable with the defog slider), and subtracting this color from all pixels.

Interface

- **L-Knee**—Determines the left margin for the change in resolution.
- **Exposure**—Determines the image exposure and lighten or darken the selected area.
- **R-Knee**—Determines the right margin for the change in resolution.
- **Defog**—Determines the amount of defogging to remove from the image.

Color and HDR Images

White

In a normal tone-mapped image, white is represented by 255,255,255 color values. That is, the brightest color possible. In an HDR image, what we see as white depends entirely on the exposure.

Background

When you look at a fluorescent tube or an incandescent light, they appear to be different colors, but we call them both 'white'. Incandescent lamps have a color temperature of 3200 degrees Kelvin (3200K). This means they are the same color as a perfect black body would be if it were heated to 3200K. Fluorescents come in several variants and have different names for each brand, but they tend to be 3500K, 4500K, and 6500 K. The 6500K appears bluer than the 3200K of an incandescent bulb. Additionally, you will often see values like this used when setting up a computer monitor. You set the white-point to one that looks right in the environment in which you are looking at the images. So, in a bright room under fluorescents, you might choose 9800K; in a dark room with a single incandescent, you might choose a much lower figure.

The chromaticity diagram below represents all the colors human beings can see. The white points are drawn in a line through the diagram. These are sometimes also called 'Black body lines'. The brighter triangle shows the range of colors that can be shown on a television set monitor (just the colors, not the apparent brightness). The triangle does not cover the entire range that can possibly be seen by the human eye. Hence, when you see colors on a TV they sometimes do not look as good as they do when printed. Blues are especially hard to reproduce on monitors. If you are looking at this on a monitor there will not appear to be much difference in the blues. However, if you were looking at this diagram printed, the difference would be more apparent.

The numbers around the circumference refer to the wavelength (color) of the light in nanometers.

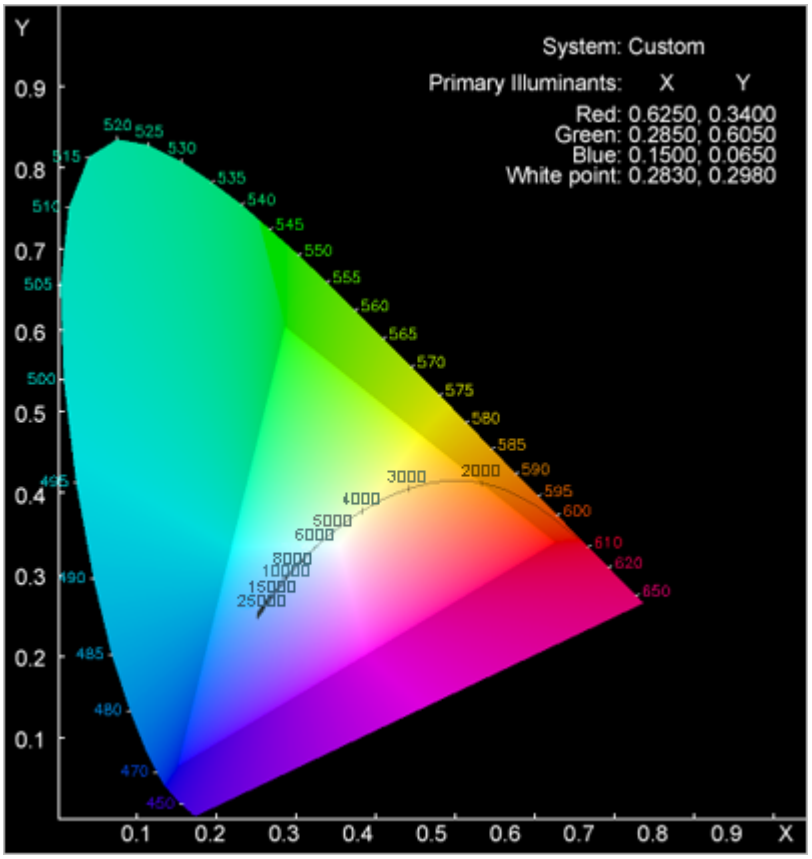

Chromaticity diagram: Colors seen by the human eye

Copyright © Right Hemisphere 2006. All Rights Reserved.

If you were outside looking up at the sky you would see many different white points, ranging from 10,000K to 5000K depending on where you were on the planet and which direction you were looking; so we standardize on these black body radiation values and we take northern hemisphere averages to use as reference points. So normal daylight is judged to be 6500K, even though it almost certainly is not where you are.

HDRI and White Point

So, how do we identify a normal exposure range for information in an HDR image? That is, what number corresponds to white?

As stated previously, white in a tone-mapped image is easy; it's the maximum value possible. Measuring the maximum value would be very difficult in an HDR image, as we do not know where to define it. The maximum number is extremely bright and does not really relate to 'white'. We can avoid the problem in a clever way by defining where mid-gray is. This is easier because we can measure it. We can take a gray card (photographic standard of 18% white as measured by a densitometer), put this card in a scene, take an HDR image of it, measure the pixel values, and say this is 18% gray. Then we can define a value that this represents in the image and scale the image so that the value is equal to the value on the gray card.

The OpenEXR (.exr) format has made this simple. The value chosen is 0.18. Therefore, a measured 18% gray card should have a value of 0.18 in an HDR image.

In practice, two things can be obtained from such a measurement. One is the 18% point; the second is the color balance. All three component colors (RGB) should be equal for gray objects, so we can also adjust the curves as required to make this even.

Plugin Manager

Menu bar > Tools > Plugin Manager

The Plugin Manager is a utility that lists the following information:

- Plugins.
- Plugin versions.
- Import and export settings, where appropriate.
- Plugin conflicts.

It is used to view current plugins and files, establish import and export settings, and resolve plugin conflicts.

Plugin conflicts are highlighted in orange on the File Formats tab.

Note: Menu options for the Plugin Manager are not available on the slave computers.

Procedure

To open the Plugin Manager:

Choose Tools > Plugin Manager on the menu bar.

Plugins Tab

Menu bar > Tools > Plugin Manager > Plugins tab

The Plugins tab displays the plugin name, version, description, status, size, the supported import and export formats, and the plugin extensions.

When Deep Exploration starts for the first time, the status of each plugin is listed as 'loaded' and a system file is created that informs Deep Exploration which plugins are used. Whenever the application is started again, this file is used to reference the plugins that are used so that the application opens without delay, and the status of each existing plugin is listed as 'defer'.

From this point, only new plugins and the plugins that you select to view in the application are listed as loaded indicating that:

1. New plugins have yet to be added to the system file for future reference.
2. The plugins selected for viewing have been loaded into the application.

Interface

Import/Export Filters—Displays the file formats that are associated with the selected plugin.

Extensions—Displays the extensions that are associated with the selected plugin.

File Formats Tab

Menu bar > Tools > Plugin Manager > File Formats tab

The File Format tab displays a list of formats with various information including the format name, extension, type, whether files are import and export in nature, and their related plugin.

Copyright © Right Hemisphere 2006. All Rights Reserved.

The tab is used to resolve any plugin or format conflicts (highlighted in orange), and modify and restore the default import and export properties. You can also move the format rows up and down within the list to view any plugin or format conflicts more easily.

Most file extension conflicts are resolved automatically; if one plugin cannot load a file with the supported file extension, the other plugin tries to load the file.

Procedures

To resolve plugin or file format conflicts:

Clear the relevant plugin or format check box. The file format is not loaded when you next start Deep Exploration.

To move a row in the list:

1. Click the row in the File Formats list.
2. Click the **Up** or **Down** buttons to move the row to the location you require.

To restore the default import and export properties:

Click **Defaults**. All default format settings including the default import and export settings are restored.

To modify the import and export properties:

1. Select the format for which you want to modify import or export properties.
2. Do one of the following:
   - Click the **Import Settings** button to modify the import properties (on page 43).
   - Click the **Export Settings** button to modify the export properties (on page 56).

   Note: These buttons are only enabled for formats that can be imported and/or exported.
3. Make the selections you require.
4. Click **OK** twice.

Interface

Up—Moves the selected row up one level in the formats list.

Down—Moves the selected row down one level in the formats list.

Reset—Restores the rows to their original order.

Defaults—Restores the default settings of the selected format.

Import Settings—Used to open the selected format's Import Properties dialog and modify the import properties.

Export Settings—Used to open the selected format's Export Properties dialog and modify the export properties.

Primitives and Modifiers

Primitives and Modifiers Toolbar > Create Primitive
Primitives and Modifiers Toolbar > Create Modifier

Using primitives (preset 3D objects) and modifiers, you can add complex models with your scene. Primitives are meshes and can have open surfaces. These primitives and other objects belonging to the model can be modified using various modifiers (modifiers) to create a more complex model. You can add myriad different primitives to scenes including cones, stars, spiral stairs, spheres, capsules, pyramids, gears, and archways.

Primitives are extremely helpful when wanting to create additional geometry to replace simple missing parts and complete a scene.

Modifiers provide many different ways to modify existing objects while keeping the file size to a minimum. You can also adjust individual modifiers (on page 271) at any time. For example, normally, you want the center of the Inflate modifier to be a point somewhere in the midst of the object and radius to be the distance of the furthest vertex from center. However, you can change the center anchor of the Inflate modifier object to achieve different effects.

Procedures

To create a primitive:

1. Open a 3D file (on page 42).
2. Click the Create Primitives down arrow.
3. Click the primitive you want to add.

The primitive is added to the scene immediately

To apply an modifier:

1. Open a 3D file.
2. Select the objects to which you want to apply the modifier.
3. Click the Create Modifier down arrow.
4. Click the modifier you want to apply.

To delete a primitive:

1. Do one of the following:
   - Select the primitive in the viewport and press DELETE.
   - Right-click the primitive in the viewport, 3D Objects list, Parts panel, or Layers panel, and then click **Delete Objects**.
   - Open the Object Properties dialog (on page 271), click the Object tab, select the primitive in the Object window, and then click **Remove**.

To delete an modifier:

1. Open the Object Properties dialog and click the Object tab.
2. Select the modifier in the Object window.
3. Click **Remove**.

Copyright © Right Hemisphere 2006. All Rights Reserved.

Publishing Web Pages

File > Save As > Select .html type
File > Batch Operations > Convert 3D Files > Select .html type
Right-click the folder and choose File > Batch Operations > Convert 3D Files > Select .html type

2D and 3D files can be published as sample template Web pages, including thumbnail presentations linked to individual Web pages, and then viewed in detail. Any 3D content can then be panned, rotated, and zoomed.

Files can be published in various formats and with various export options applied depending on the format you select. For example, if you save to the HTML Document with 3D .html format, you can choose to compress the files, export animation, and export skins. If you choose to save to the Shockwave Web page .html format, you can choose to compress the files and textures.

There are multiple methods of publishing files:

- Saving single 3D files (on page 56).
- Batch converting multiple 3D files (on page 203).

HTML Document with 3D Format

When saving to the HTML Document with 3D (.html) format, you can:

- Select a base template to apply to the published scene. These templates are stored in the Deep Exploration 4\Plugins\HTML_Publishing folder. The file properties, as defined in the export dialog when publishing to this format, are remembered for each template.
- Modify the published scene. For example, insert images and add text.
- Create new templates and save them into the Deep Exploration 4\Plugins\HTML_Publishing folder for use when publishing to HTML. The template name must be unique (from others in this folder) and the template resources folder name should be in the form '<template name>.res'.

HTML Publish Rules

Certain rules apply to publishing to the .html format:

- Deep Publish (http://www.righthemisphere.com/deeppublish) or Deep View (http://www.righthemisphere.com/deepview) is required for viewing 3D content in a Web page. If you do not have Deep Publish or Deep View installed on your computer, the first time you publish to the HTML Document with 3D .html format, you must install the Deep View 'deep.cab' file. The Default Rendering Mode dialog then displays a list of the available display renderers for the graphics card that is installed on your computer. The display renderer determines how scenes are rendered while you work, and the best renderer for your graphics card is automatically detected as the default. We recommend using the default renderer, however, you can change it (on page 209) as required.
- By default, Microsoft Windows Server 2003 is configured to recognize a set of file types. Files that are published to the .html format can only be read by a Web site if the .rh file type is added to this set. please see your Microsoft Windows Server 2003 Help for information on how to do this.

Realight Tool

Menu bar > View > Controls and Toolbars > Realight
Right-click menu bar > Realight
Customize Layout dialog > Toolbars tab > Select Realight > OK

The Realight tool is used to simulate global illumination utilizing the ambient occlusion technique, to render models as if they are surrounded by a dome of light. The tool simulates self-shadowing and makes models appear more realistic, and is especially useful for rendering models that lack texture, lighting, and bump, etc. For example, CAD models.

Ambient occlusion is a lighting technique that looks at many points on the surface of a model and estimates the occlusion of each point by the objects around it. That is, how accessible the point is to the ambient light. For example, a point on an exterior surface is more accessible that a point in a crevice, therefore it will receive more light. As the point in the crevice is less accessible, the shading becomes darker.

You can choose to store the ambient occlusion as vertex colors or as texture maps. Vertex color storage can be helpful for high density polygon models, whereas it is better to store illumination as texture maps for models with smooth surfaces and low polygon density. Any illumination that is stored as texture maps can only be applied to objects that have UV mapping (on page 172).

Additionally, both vertex colors and texture maps can be used to store the illumination.

If you use the texture maps storage option, you can reduce the incidence of artifacts by increasing the size of the maps, or by increasing the Prefilter, Noise, and Blur values. You can also decrease artifacting by rendering using vertex colors, although this can increase rendering time.

Note: The Realight tool is for use mainly on static objects and not animated objects.

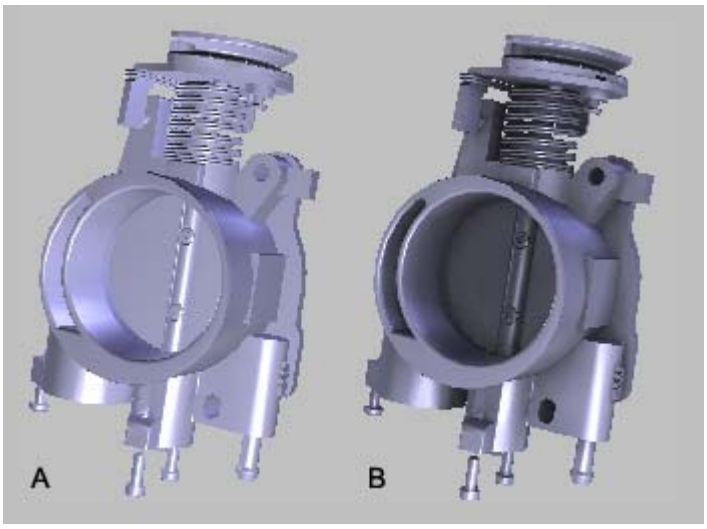

A: Without Realight illumination / B: With Realight illumination

Procedure

To perform Realight mapping:

1. Open a 3D file (on page 42) that has been UV mapped.
2. Click **Realight**  on the Realight toolbar.
3. Make your selections as required and click **OK**.

Copyright © Right Hemisphere 2006. All Rights Reserved.

Realight Settings

Realight toolbar > Realight

The Realight tool includes a number of settings that are used render models with ambient occlusion illumination.

Interface

Ambient Occlusion—Used to establish general settings for the ambient occlusion.

- **Store as vertex colors**—Stores the ambient occlusion as vertex colors. UV coordinates are not required for this option.
- **Store as texture maps**—Stores the ambient occlusion texture maps. This is better for smooth surface and low polygon density objects. UV coordinates are required for this option. Note that only the UV coordinates within the range (0,0)-(1,1) are rendered.
  - **Rays per sample**—The number of per vertex or per sub-pixel surface samples. That is, the rays that are cast from each of the surface vertices in vertex color mode, or sub-pixels in texture maps mode. The level of ambient occlusion is determined by the average result from the total number of rays cast for each sample. The higher the value you enter, the more rays are cast and so, the more accurate and smoother the rendered output. Note that higher values slow down the processing speed.
  - **Brightness**—Determines the level of brightness of the ambient occlusion.

Texture Maps—Used to establish settings for the texture maps.

- **Map Generation—**Used to establish the method for generating texture maps.
  - **Scheme**—Used to select the source from which maps are generated.
    - **Existing materials**—Generates maps based on the organization of existing materials. For example, if an object comprises two materials that use the same texture map, two maps are created. Note that using this option can result in unnecessary map space and poor use of memory.
    - **Existing diffuse maps**—Generates maps based on the existing diffuse map organization. For example, if an object comprises two materials that use the same texture map, only one map is created. We recommend using this option only if the UVs have been packed with the UV mapping tool (on page 172).

      Note: If you select this option and the materials do not contain any maps, the maps are generated using the existing materials.

  - **Outcome**—Used to select the manner in which maps are generated.
    - **Replace diffuse map**—Replaces the existing diffuse maps with new ones. The new maps are based on the width and height of any existing maps. This option uses slot 1 of the material's maps.
    - **Merge into diffuse map**—Merges the new diffuse maps with the existing ones. This option uses slot 1 of the material's maps.
    - **Add new light map**—Adds a new light map to the materials. This option uses slot 10 of the material's maps.
- **Map Properties**—Used to establish settings for the new texture maps.
  - **Samples**—The number of per sub-pixel surface samples. That is, the rays that are cast from each of the map's sub-pixels. These determine the amount of antialiasing to apply to the maps. For example, if you enter a value of 2, each pixel is divided into two and a ray is cast from each sub-pixel. Note that higher values slow down the processing speed.
  - **Noise**—Applies white noise to the texture map. The higher the value, the more noise applied.

- **Prefilter**—Applies color bleed around the polygon groups. The higher the value, the more bleed is applied reducing the number of artifacts. Note that if you enter a value of 0, seams may be visible on the model.
- **Blur**—Applies Gaussian blur to the texture map. The higher the value, the more blurring applied. This can be helpful in improving illumination if you enter a low 'sample' value.
- **Same size for all maps**—Used to create all maps with the same size.
  - **Width**—The width of the maps in pixels.
  - **Height**—The height of the maps in pixels.
- **Calculate proportional maps**—Used to create maps based on the maximum dimension of the largest object.
  - **Maximum dimension**—The maximum dimension of the largest map that is applied to the largest object, in pixels. The maximum dimension of all other maps is then calculated proportionally based on the remaining objects' size. Therefore, the width or height of all other maps is equal to, or less than this dimension. This can be helpful in conserving texture space.
  - **Round size to a power of two**—Rounds up the maximum width and height values to the closest power of two. For example, if you enter 500, it is rounded up to 512. This option should be used if your graphics card is optimized for a power of two.
- **Save as internal image**—Saves the texture maps in the internal application memory.
- **Prefix**—The prefix to append to the new map names. This is helpful to identify any new maps that are created.
- **Path**—The location in which to save the maps.
- **Format**—The format in which to save the maps.

Ground Plane—Used to establish the settings for the virtual ground plane.

- **Use virtual ground plane**—Uses a virtual ground plane to calculate the illumination. Any rays that are cast from the bottom of the model collide with this plane to cast shadows on the underside of the model. The closer the ground plane is to the model, the darker the shadows.
  - **Distance**—The distance between the model and the ground plane.
  - **Size**—The percentage size of the ground plane compared to the size of the model.

Defaults—Resets all settings back to the default values.

OK—Closes the dialog and applies the settings. Any changes made to the settings are saved.

Cancel—Cancels the process and closes the dialog. Any changes made to the settings are lost.

Help—Opens the relevant Help topic.

Copyright © Right Hemisphere 2006. All Rights Reserved.

Slide Shows

Menu bar > Standard toolbar > Slide Show

You can create and present slide shows presentations in the viewport.

Procedures

To create a slide show:

1. Place the images for your slide show in a folder of your choice.
2. From the Folders panel (on page 241), click the folder where your slide show images are located.
3. Open the Options dialog (on page 224) and use the Slide Show tab to configure the slide show settings.
4. Click **Slide Show**  on the Standard toolbar.

The slides are automatically displayed in the viewport for the selected number of seconds.

To manually advance slides:

Press the space bar or use CTRL+RIGHT ARROW.

To stop a slide show:

Press CTRL+LEFT ARROW or ESC on your keyboard while the slide show is in progress.

Shaders

File list > Shaders tab
Shader toolbar > Edit Shader

In 3D computer graphics, a shader is a program used to determine the final surface properties of an object. For example, a shader can define the color, reflectivity, and translucency of a surface. The most common use of shaders is to determine the final color of the object. Shaders can also be used to manipulate the object's position.

There are two types of shaders:

- **Vertex shaders:** Usually used for computing vertex position, vertex color, and vertex normal, etc. They can be emulated by your CPU. That is, if you have an NVIDIA Riva TNT graphics card, you can still see vertex shaders.
- **Pixel shaders:** Also called 'fragment' shaders. Pixel shaders are used to shade the model and can produce interesting visuals. These cannot be emulated and are only supported by cards such as GeForce 3, GeForce 4 (not GF4 MX), and newer ATI Radeons.

Note: All shaders that are written in either Cg, HLSL (DirectX 9.0's High Level Shading Language), or Assembler language are supported. Please see the Microsoft DirectX Web page (http://www.microsoft.com/windows/directx/) for further information.

Shader (.fx) files are displayed in the Shaders tab (on page 314) within the File list. When you select a .fx file in the Shaders tab, a built-in 'teapot' model is created and displayed in the viewport shaded with the selected shader. You can also drag shaders onto objects. Shaders are attached to materials; when you drag a shader onto an object, other objects may also appear shaded. Shaders can also be edited using the Shader toolbar (on page 306) or via the Shader tab (on page 286) within the Material Properties dialog.

A number of shaders are delivered with Deep Exploration. For example, the wood.fx and cellophane.fx shader files.

Note that shader information can be saved within .rh files (on page 478).

Important Notes

- Shaders cannot be removed once they are applied to an object as the shader changes the object's material properties. If you think you might want to remove a shader effect after it has been applied, you should duplicate the object's materials first, and simply drag the copy of the material that you duplicated earlier onto the model.
- If incorrect information is displayed when you drag a .fx file onto a model, ensure the following requirements have been met:
  - Either an ATI Radeon Card with 9800 or later chipsets, or an NVIDIA Gforce 4 graphics card or later chipsets.
  - DirectX 9.0 (http://www.microsoft.com/windows/directx/) must be installed on your computer.
  - You must be using the DirectX 9.0 display renderer (on page 209). Otherwise, either the default material is displayed, or the texture if a shader uses textures.
  - The 'Use alpha channel in 32 bpp images' (on page 235) option must be active for all shaders that use 32-bit textures.
- You may not be able to see all the shaders automatically even if you have the latest graphics card.
- Each modern graphics card supports a certain level of pixel shader capability. For example:
  - NVIDIA GeForce4 supports version 1.2.
  - NVIDIA GeForce FX supports 2.0.

Copyright © Right Hemisphere 2006. All Rights Reserved.

  - ATI Fire GLX 1 supports 1.4.
- As version numbers have increased, so have the complexity of the shaders. For example, the Wood Shader requires version 2.0 of the pixel shader capability. For cards without this feature only a gray surface is displayed in the viewport, and a yellow warning triangle is displayed in the status bar. Double-clicking the warning triangle displays information relating to the shaders in the Export Log dialog.

Note: These are all aspects that relate to the pixel shader capability of specific graphics cards.

Procedures

To add a shader to a model:

Drag a shader from the Shaders tab in the File list into the scene.

To edit a shader:

1. Select the object (on page 86) for which you want to edit the shader.
2. Do one of the following:
   - Click **Edit Shader**  on the Shader toolbar.
   - Open the Material Properties dialog (on page 282) and click the Shader tab.
3. Make your selections (on page 162) as required and click **OK**.

Edit Shader Dialog

Shader toolbar > Edit Shader

You can edit vertex and pixel shaders using the Edit Shader dialog. The shader status and attributes can also be viewed in this dialog. For each shader type, additional information is displayed in a hierarchical tree view including sliders for color values.

Procedure

To open the Edit Shader dialog:

Click **Edit Shader**  on the Shader toolbar.

Interface

Show all—Displays all objects and parameters including shader definitions, non-editable parameters, the vertex and pixel shader source, vertex register mappings, and texture, sampler, and render states. Otherwise, only editable parameters including texture, sampler, and render states are displayed.

Set Active—Switches between techniques in the event that a shader has multiple techniques.

Note: All techniques are verified when a shader is loaded. That is, if your graphics card does not support a particular technique, this button is inactive.

Value—The value for the editable parameter (bool, float, integer, etc.), including: Color, light direction, and some constants such as specular exponents.

- **X**—Sets the value of the first component in a vector.
  - **Min**—Determines the minimum value of the vector component.

  - **Max**—Determines the maximum value of the vector component.
- **Y**—Sets the value of the second component in a vector.
  - **Min**—Determines the minimum value of the vector component.
  - **Max**—Determines the maximum value of the vector component.
- **Z**—Sets the value of the third component in a vector.
  - **Min**—Determines the minimum value of the vector component.
  - **Max**—Determines the maximum value of the vector component.
- **W**—Sets the value of the fourth component in a vector.
  - **Min**—Determines the minimum value of the vector component.
  - **Max**—Determines the maximum value of the vector component.

Defaults—Resets all editable parameters to their default values.

Normalize XYZ—Normalizes the XYZ value of the selected parameter.

Color—Opens the color selector and is used to select the color of the shader that is displayed in the viewport.

Scale Color—Scales the color to apply to the selected object, taking into account the X, Y, and Z minimum and maximum values.

OK—Applies the process, closes the dialog, and saves the settings.

Help—Opens the relevant Help topic.

Copyright © Right Hemisphere 2006. All Rights Reserved.

Steps

Menu bar > View > Controls and Toolbars > Steps
Right-click menu bar > Steps
Customize Layout dialog > Controls tab > Select Steps > OK

Just as model views emulate the properties of schematic diagrams, so do 'steps' can emulate sequences of instructions; they present a list of steps each with a label and arbitrary text. Each step comprises a number of user-defined animated sequences that are displayed when you play the step.

Various step metadata information can be displayed in PDF documents using the with the PDF Publishing Module (on page 188).

Steps are helpful for including 3D-view instructions in files, such as PDF files. They are based on the current view of the scene. Each step has an associated camera, render mode, and layer. The associated layer comprises the currently visible objects, including visible callouts and measurements. Steps are displayed in the Steps panel (on page 290) in the form of a thumbnail for each step.

The thumbnail that is displayed is the last frame of the last animation defined in the sequence list for each step. If an animation is modified, the step thumbnail can be updated.

When you select a step:

- The active viewport is set to the associated camera and render mode.
- The objects in the associated layer are made visible.
- All objects that are not associated with the step become invisible.

The Steps panel is used to create, activate, and delete steps. Using the right-click menus (on page 342) you can also modify the step properties (on page 292) including defining the instructional text, and linking the step to multiple animations.

If you are using multiple viewports (on page 61), different steps can be used in each viewport. For example, you can display a step in one viewport, a 27 Isometric RBA view in another, and a perspective view from the top in yet another. The viewport label displays the current view in each viewport.

Note: Steps cannot be modified. However, you can delete them and create new steps easily.

Step descriptions can be used to display the step's metatdata content (on page 166) in PDF documents using the PDF Publishing Module (on page 188).

Procedures

To create a step:

1. Modify the scene view as you require.
2. Open the Steps panel (on page 290).
3. Click **Options**  in the Steps panel toolbar.
4. Make your global selections as required and click **OK**.

   Note: Your settings are applied to all new steps until the options are next modified.

5. Click **Create**  on the Steps panel toolbar.
6. Enter a name and description for the step.
7. Select the sequences you want to add to the step in the 'Available sequences' list and click **Add**.
8. Click **OK**.

To edit a step:

1. Right-click the step you want to edit in the Steps panel, and then click **Properties**.
2. Edit the step as required and click **OK**.

To play a step, do one of the following:

- Double-click the step in the Steps panel.
- Select the step in the Steps panel and click **Forward** .
- Right-click the step you want to play in the Steps panel and click **Forward**.

To stop playing a step:

Click **Stop** . The step that is currently playing stops.

To delete a step, do one of the following:

- Select the step you want to delete in the Steps panel and click **Delete** .
- Right-click the step you want to delete in the Steps panel and click **Delete**.

To edit step properties:

1. Right-click the step in the Steps panel and click **Properties**.
2. Modify the name and description of the step if required.
3. Do one or more of the following:
   - Select the sequences you want to add to the step in the 'Available sequences' list, and then click **Add**.
   - Select the sequences you want to remove from the step in the 'Current sequences' list, and then click **Remove**.
   - Select a sequence and click the **Up** or **Down** buttons to move the sequence to the location you require.
4. Click **OK**.

To switch between a thumbnail and a detailed view:

Click **Thumbnails**  on the Steps panel. If the list was displayed in a detailed view, thumbnails are displayed. If the list was displayed as thumbnails, a detailed view is displayed.

To sort the steps:

1. Right-click a step in the Steps panel and click **Sort**.
3. Do one of the following:
   - Click **By Name** to sort the list by the step name.
   - Click **By Creation Time** to sort the list by the time at which the step was created.
4. Do one of the following:
   - Click **Ascending** to sort the list in ascending order by name or time depending on your selection.
   - Click **Descending** to sort the list in descending order by name or time depending on your selection.

To update a step and its thumbnail:

Copyright © Right Hemisphere 2006. All Rights Reserved.

Right-click the step you want to delete in the Steps panel and click **Update Step**.

Steps Metadata

Step metadata is designed specifically to create content for use with the various RH steps objects (on page 190) in order to display that content in PDF documents using the PDF Publishing Module (on page 188).

The metadata content is specified in the Description field of each step's properties (on page 292). This field can comprise two separate metatdata tags, a metadata keyword, and the metadata content itself.

The two metatdata tags comprise keys and corresponding content that are referenced by some of the RH step objects:

- ##global_metadata##—The content is common to the entire file. You can add this tag to any step within a file. However, for best practice we recommend adding it to the first step.
- ##step_metadata##—The content is specific to the current step.

The following is an example of a step description that contains the global metatdata tag, the step metatdata tag, metadata keys, and related content for each keyword.

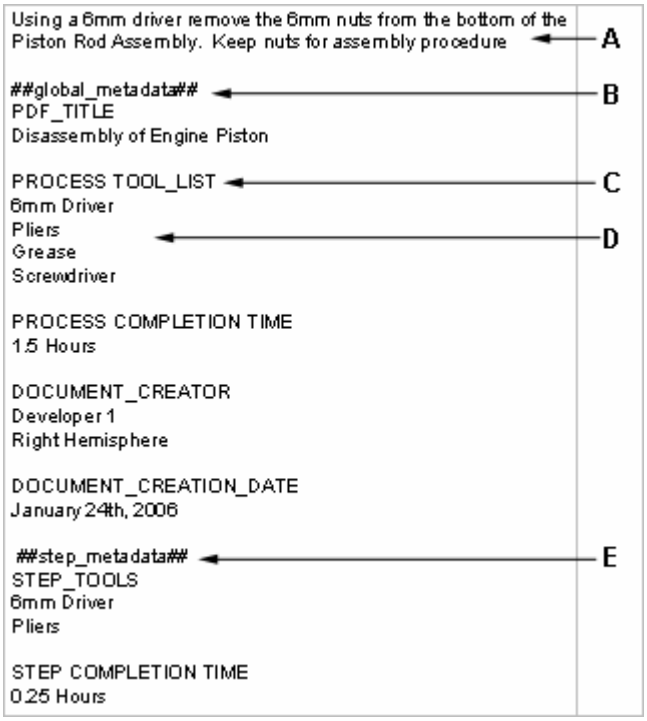

A: Step description
B: Global metadata tag
C: Keyword
D: Content
E: Step metadata tag

Metadata Rules

- Text located before the global metadata tag is the step's description.
- The first line after the global tag, step tag, or an empty line is a keyword.
- Keys can be only one line.
- Text immediately below each keyword is that keyword's corresponding content.
- The content for each keyword is ended by an empty line.

Teamwork Tools

Menu bar > View > Controls and Toolbars > Teamwork
Right-click menu bar > Teamwork
Customize Layout dialog > Toolbars tab > Select Teamwork> OK

Deep Exploration can be used to create and edit various kinds of markups (on page 141) can be used to direct attention to, and identify parts of a model; the Teamwork tools enable you to create and edit Teamwork markups. Using these tools, you can:

- Create (on page 167) note, URL, line, and shape markups.
- Hide markups and modify the scene colors (on page 144, on page 168).
- Modify markup settings (on page 169) for the individual markup types.
- Hide and show markups (on page 144, on page 168).
- Deleting markups (on page 144, on page 168).

Markups can be moved (on page 90) using the 3D Editor toolbar. The editing (on page 141) of markups can be performed using a number of different methods.

Teamwork Markup Rules

Certain rules apply to Teamwork markups:

- Markups are objects and as such are displayed in the 3D Objects list when they are created.
- Using the 3D Objects list, you can select, hide and show markups, group, merge, and collapse their hierarchies, and delete markups in the same way as other objects.
- For markups to be displayed on an image or model, the Show Markups option must be selected on the Display menu.
- Every time a Teamwork markup is added to a scene, a model view (on page 75) is created based on the current view of the scene.

Creating Markups

Teamwork toolbar > Note tools
Teamwork toolbar > URL tools
Teamwork toolbar > Line tools
Teamwork toolbar > Shape tools

The Note, URL, and Shapes tools are used to create markups. When you select one of these tools, the cursor changes to a small cross . You can then begin creating a markup by clicking the model's surface to place the start point. Certain actions are then required to finish creating the markup, and these differ depending on the tool selected as described below.

Create Markup Actions

Normal, Point, or Arrow note, URL with leader, and Line tools: Click, drag.

Note Circle tool: Click, drag, click.

URL without leader: Click once.

Arc tool: Three clicks.

Circle or rectangular tools: Click, drag.

Polyline tool: Multiple clicks, right-click.

Copyright © Right Hemisphere 2006. All Rights Reserved.

Procedure

To create a markup:

1. Open a 3D file (on page 42).
2. Click one of the Note, URL, or Shape markup tools on the Teamwork toolbar.
3. Click **Settings** on the tool's submenu to establish the default markup's settings.
4. Do one of the following:
   - If you are creating a normal, point, or arrow note markup, a URL with leader markup, or a line markup, click where you want to place the start point and drag to the leader length.
   - If you are creating a URL without leader markup, click where you want to place the markup.
   - If you are creating a circle note markup, click where you want to place the start point, drag outwards and inwards to set the circle radius, and click once more to set the leader length.
   - If you are creating an arc markup, click where you want to place the start point, click again to place the centre of the arc circumference, and click once more to place the end point.
   - If you are creating a circle markup or a rectangular markup, click where you want to place the start point and drag outwards and inwards to set the circle radius or markup size.
   - If you are creating a polyline markup, click where you want to place the start point, click to place the second point, and so on, then right-click to place the end point.
   - If you are creating a shape markup, select the object and then click the shape tool. The markup is created and surrounds the selected objects.

The markup is added with the user name, date and time information. The Markup Layer object and newly created markup object are displayed in the 3D Objects list, and a model view is created. You can now edit the markup type, size, font, colors and text.

To modify the markup settings:

1. Open the Settings dialog for the markup type settings you want to modify.
2. Make the selections you require.
3. Click **OK**.

Displaying and Deleting Markups

Teamwork toolbar > Show/Hide Markup
Teamwork toolbar > Delete Markup

You are able to hide, show, and delete markups. For markups to be displayed on an image or model, the Show Markups option must be selected on the Display menu.

Note that there are multiple ways of deleting markups (on page 144).

Procedures

To show and hide markups:

Click **Show/Hide Markup** on the Teamwork toolbar.

To delete markups:

Select the markups (on page 86) you want to delete, and then click **Delete Markup** on the Teamwork toolbar.

Markup Settings

Teamwork toolbar > Click tool down arrow> Settings

Using the Settings dialogs, you can modify the default markup's settings for the individual markups. The settings are saved to your computer registry for future use. Any changes you make to the settings are applied to all markups that are subsequently created.

You can also edit individual markups (on page 143) using the Edit Markup dialog.

Note Settings Dialog

Teamwork toolbar > Note > Settings

Using the Note Settings dialog, you can modify the settings for note markups. The settings are saved to your computer registry for future use. Any changes you make to the settings are applied to all note markups that are subsequently created.

Procedure

To open the Note Settings dialog:

Click Settings on the Teamwork toolbar for the Note tool.

Interface

Color—Used to modify the note components' colors.

- **Type**—The note types.
- **Line**—Used to open the color selector and select a color for the lines.
- **Text**—Used to open the color selector and select a color for the text.
- **Background**—Used to open the color selector and select a color for the background.

Miscellaneous—Used to modify various miscellaneous note settings.

- **Attach to mesh**—Always attaches the markup's leader to a mesh.
- **Always on top**—Draws the markups on top of all the objects in the scene.

OK—Closes the dialog and applies the settings. Any changes made to the settings are saved.

Cancel—Closes the dialog. Any changes made to the settings are lost.

Help—Opens the relevant Help topic.

URL Settings Dialog

Teamwork toolbar > URL > Settings

Using the URL Settings dialog, you can modify the settings for URL markups. The settings are saved to your computer registry for future use. Any changes you make to the settings are applied to all URL markups that are subsequently created.

Copyright © Right Hemisphere 2006. All Rights Reserved.

Procedure

To open the URL Settings dialog:

Click Settings on the Teamwork toolbar for the URL tool.

Interface

Color—Used to modify the URL components' colors.

- **Type**—The URL types.
- **Line**—Used to open the color selector and select a color for the lines.
- **Text**—Used to open the color selector and select a color for the text.
- **Background**—Used to open the color selector and select a color for the background.

OK—Closes the dialog and applies the settings. Any changes made to the settings are saved.

Cancel—Closes the dialog. Any changes made to the settings are lost.

Help—Opens the relevant Help topic.

Line Settings Dialog

Teamwork toolbar > Line > Settings

Using the Line Settings dialog, you can modify the settings for line markups. The settings are saved to your computer registry for future use. Any changes you make to the settings are applied to all line markups that are subsequently created.

Procedure

To open the Line Settings dialog:

Click Settings on the Teamwork toolbar for the Line tool.

Interface

Color—Used to modify the line components' colors.

- **Type**—The line types.
- **Line**—Used to open the color selector and select a color for the lines.
- **Text**—Used to open the color selector and select a color for the text.
- **Background**—Used to open the color selector and select a color for the background.

Miscellaneous—Used to modify various miscellaneous line settings.

- **Always on top**—Draws the markups on top of all the objects in the scene.

OK—Closes the dialog and applies the settings. Any changes made to the settings are saved.

Cancel—Closes the dialog. Any changes made to the settings are lost.

Help—Opens the relevant Help topic.

Shape Settings Dialog

Teamwork toolbar > Shape > Settings

Using the Shape Settings dialog, you can modify the settings for shape markups. The settings are saved to your computer registry for future use. Any changes you make to the settings are applied to all shape markups that are subsequently created.

Procedure

To open the Note Settings dialog:

Click Settings on the Teamwork toolbar for the Shape tool.

Interface

Color—Used to modify the shape components' colors.

- **Type**—The shape types.
- **Line**—Used to open the color selector and select a color for the lines.
- **Text**—Used to open the color selector and select a color for the text.
- **Background**—Used to open the color selector and select a color for the background.

Miscellaneous—Used to modify various miscellaneous shape settings.

- **Always on top**—Draws the markups on top of all the objects in the scene.

OK—Closes the dialog and applies the settings. Any changes made to the settings are saved.

Cancel—Closes the dialog. Any changes made to the settings are lost.

Help—Opens the relevant Help topic.

Copyright © Right Hemisphere 2006. All Rights Reserved.

UV Mapping

Menu bar > View > Controls and Toolbars > UV Mapping
Right-click menu bar > UV Mapping
Customize Layout dialog > Toolbars tab > Select UV Mapping > OK

The UV Mapping tools allow you to apply UV mapping coordinates to selected objects to prepare them for further modification in Deep Exploration. For example, once you have mapped a model, you can then use the Realight tool to simulate global illumination. The mapping tools are also used to 'pack' UVs. Packing arranges UVs so that they fit nicely onto a texture map and take up as much of the texture space as possible.

The settings in the UV Mapping Settings (on page 172) dialog determines how objects are mapped and how the UV's are packed.

The Pack tool is used pack the polygon's existing UVs using the settings established in the UV Mapping Settings dialog, without mapping the any new UVs. Note that the Clump packing method is used to pack the UVs multiple times until you achieve the result you want, as this method produces a different result each time the polygon's UVs are packed. If you use the Rectangular or Simple packing methods, you should only pack the UVs once as the same results are produced each time.

The Map and Pack tool is used to map the polygons into UV space and then pack the resulting UV's.

Procedures

To map and pack UVs:

1. Open a 3D file (on page 42).
2. Click **Settings**  on the UV mapping toolbar.
3. Make your selections as required and click **OK**.
4. Select the objects for which you want to map.
5. Click **Map and Pack** .

The UVs are mapped to the selected objects.

To pack UVs:

1. Open a 3D file (on page 42).
2. Click **Settings**  on the UV mapping toolbar.
3. Make your required Packer selections and click **OK**.
4. Select the objects for which you want to map.
5. Click **Pack** .

The UVs are packed.

UV Mapping Settings

UV Mapping toolbar > Settings

The UV Mapping Settings dialog is used to select the type of UV mapping and packing to apply to the selected objects. You can establish a number of settings for each type including the tolerance angle for Vamp mapping and whether to preserve UV orientation when packing UVs.

Interface

Mappers—Used to select the type of UV mapping to apply to the selected objects.

- **VAMP**—Variable Angle Multi-Planar Mapping. Applies a local-planar map to groups of polygons, it directly maps objects using the VAMP tolerance angle. This option is best for complex geometry. We recommend using this method for organic models.
- **Cube**—Finds the axis closest to the polygons' normals and maps them onto the perpendicular plane. That is, it places a cube around each object and maps the section of each object that is closest to a cube side. We recommend using this method for CAD models.
- **Rigid**—Unfolds each object to map the UVs. That is, if the UVs were printed onto a piece of paper, you could fold it into the shape of the object. This helps to minimize distortion.

Packers—Used to select the method of packing the UVs.

- **Clump**—Packs the UVs into a 'clump' in the middle of the UV map. UVs are placed in any available space within the clump, including areas within other UVs. For example, if part of a UV map contains an internal hole, a section that does not contain UV mapping, small UVs are placed in this hole. We recommend using this method for organic models.

Note: This packing method produces a different result each time you pack the UVs.

- **Rectangular**—Packs the UVs in a rectangular pattern. We recommend using this method for CAD models.
- **Simple**—Packs the UVs in a simple pattern. That is, in rows, from the smallest to the largest UV.

VAMP Options—Used to establish the angle of tolerance for VAMP mapping.

- **Tolerance**—Determines the angle between the projection plane and the mapped polygon. For example, 0 degrees creates many small UV edges (co-planar polygons are grouped together) to create finer UV mapping. Whereas, 90 degrees creates fewer but larger UV edges (large partitions with distorted polygons) to create more chunky UV mapping.

Packaging Options—Used to establish how UVs are packed using the selected packing method.

- **Fill space**—Spaces the UVs according to the selected Spacing percentage. That is, it resizes the partitions to maximize the use of the texture space of the UVs.
- **Preserve orientation**—Preserves the UV orientation of the UVs.
- **Pack per material**—Packs UVs that use the same material, separately. For example, if polygons 1 and 2 use material type A, and polygon 3 uses material B, polygons 1 and 2 are packed separately from polygon 3. Otherwise, polygons 1, 2, and 3 are packed together, sharing the same texture but retaining their own material.
- **Spacing**—Determines the spacing between the packed UVs. Usually spacing is about 0.7%.

Note: Large spaces may not be possible. For example, 10% spacing is not possible if there a large number of UVs on a UV map. In this case, the largest possible spacing is used.

OK—Closes the dialog and applies the settings. Any changes made to the settings are saved.

Cancel—Cancels the process and closes the dialog. Any changes made to the settings are lost.

Help—Opens the relevant Help topic.

Copyright © Right Hemisphere 2006. All Rights Reserved.

Gateway Module

The Gateway Module is used to quickly and easily browse for assets and derivatives within Deep Server databases to which you have access rights. Once the assets and derivatives are found, the user can easily download and view the files and embed them into applications using Deep Publish (http://www.righthemisphere.com/deeppublish), and update assets as required.

Gateway provides the same functionality as Deep Server Web; it standardizes how you view and communicate with Deep Server, serving as:

- A user interface for connecting to Deep Server.
- A basic browser for looking at projects and their contents in Deep Server.
- A mechanism to allow users with restricted access to get only the functionality they are allowed.

The module's interface comprises a number of components including the Gateway panel (on page 247), various Gateway tabs (on page 313), and a number of right-click menus (on page 326).

Basic Workflow

The most basic workflow used in Gateway allows you to log on to a Deep Server for a single session that is controlled by the Gateway Module. As long as Gateway is open, the session remains connected, allowing you to perform several actions in the Deep Server without having to log on again for each task.

Assets and Derivatives

You can use original 3D files (assets) to create and render 2D files (derivatives) with preset scene settings and a number of display elements:

- 'Asset' refers to the original 3D file. This can be a single asset, an assembly, or a part file.
- 'Derivative' refers to the file that is created manually from the original 3D file. For example, a 2D derivative that displays the model as a solid rendering with outlines overlaid on top.
- 'Base derivative' refers to the .rh file that is created automatically in Deep Server from the original 3D file.
- 'Associated file' refers to any files that is associated with an asset.
- 'Subgroup' refers to all base derivatives of the selected item's child nodes or assets.

Examples

Below are some examples of 2D derivatives.

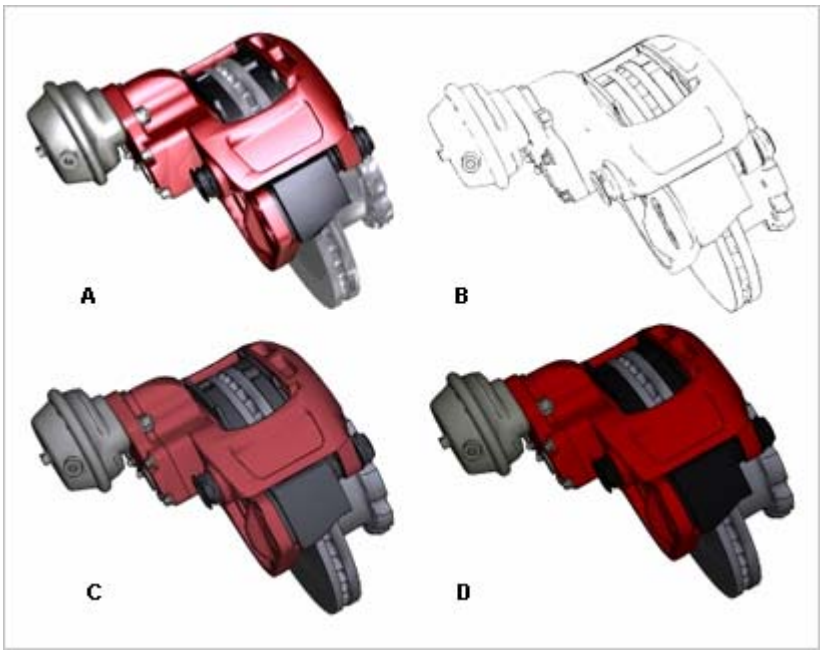

A: Optimized lighting for CAD assets
B: Line illustration
C: Variant on Shaded Illustration
D: Shaded illustration

Using Gateway

Menu bar > View > Explorer Bar > Gateway
Click current panel or list menu bar > Gateway

Once you have installed Gateway, you can use it to:

- Add and remove servers (on page 176).
- Browse multiple servers (on page 184) from a single interface.
- Browse, view (on page 184), and manage single assets, assemblies, and derivatives.
- Upload single assets (on page 178), assemblies (on page 179), and associated files (on page 184).
- View properties (on page 186) for servers, folders, and files.
- Embed assets and derivatives (on page 133) into other applications: drag and drop functionality.
- Download (on page 180) multiple assets and derivatives simultaneously.
- Cache downloaded files (on page 180) for future use.
- Verify security settings (on page 186).

Procedure

To begin using Gateway:

1. Do one of the following to display the Gateway panel (on page 247):
   - Choose View > Explorer Bar > Gateway on the menu bar.
   - Click the currently displayed panel or list menu bar, and then click Gateway .

You can now a add server (on page 176).

Copyright © Right Hemisphere 2006. All Rights Reserved.

Adding, Renaming and Removing Servers

Gateway panel > Right-click in Assemblies/Assets tab > Add Server
Gateway panel > Assemblies/Assets tab > Right-click server node > Rename
Gateway panel > Assemblies/Assets tab > Right-click server node > Properties
Gateway panel > Assemblies/Assets tab > Right-click server node > Remove Server

You can add servers to Gateway. Once you have added a server, you must log in (on page 176) before you can continue with other server-related tasks such as uploading and managing assets and derivatives. However, you can rename and remove servers without logging in.

Procedures

To add a server:

1. Open the Gateway panel.
2. Right-click in the Assemblies or Assets tab, and then click **Add Server**.
3. Do the following:
   - Enter a name for the server in the Name field.
   - Enter a URL in the Address field for the location that corresponds to the server.
4. Click **OK** to add the Deep Server.

You can now log in to the server.

To rename a server:

1. Right-click the server node in the Assemblies or Assets tab.
2. Do one of the following:
   - Click **Rename**, enter the new name, and then press ENTER.
   - Click **Properties**, enter the new name, and then click **OK**.

To remove a server:

1. Right-click the server node in the Assemblies or Assets tab.
2. Click **Remove Server**.

Logging In and Out of Servers

Gateway panel > Assemblies/Assets tab > Expand server node
Gateway panel > Search tab > Login

In order to use Gateway, you must first log in (connect) to the server where Deep Server Web was previously installed and configured.

Once you have logged in to a server, any projects and categories that were created in Deep Server Web are displayed in the Gateway panel. You can now continue with other server-related tasks. For example, uploading and managing assets and derivatives.

Note: Please see your Systems Administrator for further information for information on Deep Server Web.

When you close Deep Exploration, you are automatically logged out of any current servers.

Procedures

To log in to a server:

1. Add a Deep Server (on page 176) in the Gateway panel.
2. Do one of the following to display the Login dialog (on page 177):
   - Expand the node of the server to which you want to connect in the Assemblies or Assets tab.
   - Select the server to which you want to connect in the Search tab and click **Login**.
3. Enter the user name and password of the Deep Server.
4. Click **OK**.

All Deep Server Web projects and categories and the 'logged in' icon  are displayed in the Gateway panel.

To log off a server:

1. Right-click the node of the server from which you want to disconnect in the Assemblies or Assets tab.
2. Click **Log Out**.

All Deep Server Web projects and categories are removed from the Gateway panel, and the 'logged out' icon .

To reconnect to a server:

1. Do one of the following to display the Login dialog:
   - Expand the node of the server to which you want to connect in the Assemblies or Assets tabs.
   - Select the sever to which you want to connect in the Search tab and click **Login**.
2. Enter the user name and password of the Deep Server.
3. Click **OK**.

Login Dialog

Gateway panel > Assemblies/Assets tab > Expand server node
Gateway panel > Search tab > Login

The Login dialog is used to gain access to Deep Server by entering the user name and password at the beginning of the session.

Interface

Name—The user name that is used to log in to the Deep Server.

Password—The password used to confirm that the user has permission to the Deep Server.

OK—Closes the dialog, and applies the settings. Any changes are saved.

Cancel—Cancels the process and closes the dialog. Any changes made to the settings are lost.

Help—Opens the relevant Help topic.

Copyright © Right Hemisphere 2006. All Rights Reserved.

Adding Projects

Gateway panel > Assemblies tab > Right-click server node > Add Project
Gateway panel > Assets tab > Right-click server node > Add Project

You can add projects to server nodes to store and manage assets using the Add Project dialog (on page 329). After adding a project, you can upload assets (on page 178) into the project and download subgroups (on page 180) for all assets and items within the project.

Procedure

To add a new project:

1. Right-click the server node in the Assemblies or Assets tab.
2. Click **Add Project**.
3. Enter a name and description for the project, and then click **OK**.

Uploading Assets and Assemblies

Gateway panel > Assets tab
Gateway panel > Assemblies tab

You can upload single and assembly assets to the server databases. You can then browse and view (on page 180) the asset's derivatives, associated files, and subgroups. Assemblies can also be deleted (on page 186).

There are two methods of uploading assets:

- Uploading single assets (on page 178).
- Uploading assemblies (on page 179).

You can define certain attributes when uploading an asset, with which to help you manage that asset and its derivatives. For example, you can select the project in which to group the asset, and select a processing method to ensure the asset is treated in a particular manner when being rendered. You can also define a category and metadata on which to search for the asset later on.

When uploading assets, the 'added files' window displays all the assets that will be uploaded. Assets that cannot be uploaded are displayed as inactive in the window and can be removed at any time.

You must refresh the Gateway panel (on page 187) to see the newly uploaded assets and assemblies. Once you have uploaded assets, you can perform a number of procedures including creating and deleting derivatives.

Important Note: Uploading assets does not overwrite identical assets in the database' if you upload an asset twice, the asset is added to the database twice.

Uploading Single Assets

Gateway panel > Assets tab > Right-click server or folder node > Upload Assets

Single assets can be uploaded to the server databases using the Upload Asset dialog (on page 329), for use in Deep Exploration.

Procedures

To upload single assets:

1. Right-click a server or folder node in the Assets tab.
2. Click **Upload Assets**. The Upload Asset dialog is displayed.
3. Click **Add Asset**, then navigate to and select the assets that you want to upload.
4. Click **Open**. The asset files are displayed in the added files window.
5. Select the check boxes for the assets you want to upload.
6. Select a project in which to group the asset.
7. Select a processing method to apply to the asset.
8. Enter one or more category keywords in which to group the uploaded asset.
9. Enter one or more metadata keywords, separated by spaces, by which the asset can be searched (on page 182).
10. Click **Upload**. The assets are queued for processing in the selected server.

    Note: You click Abort at any point to cancel the upload process.

11. Click **Refresh**. Once the assets have been processed and uploaded, they are displayed in the Assets tab.

To remove assets from the added files window:

1. Select the check boxes in the added files window for the assets you want to remove.
2. Click **Remove**.

Uploading Assemblies

Gateway panel > Assemblies tab > Right-click server or folder node > Upload Assembly

Assemblies can be uploaded to the server databases using the Upload Assembly dialog (on page 330), for use in Deep Exploration. Assemblies are uploaded in a hierarchal manner beginning with all the assembly's parts and working upwards through the hierarchy until the assembly is completely uploaded.

Note: You must upload the assembly and all part files when uploading an assembly.

When uploading assemblies, you can choose to assemble them into a single .rh file or to simply upload the files without building the .rh file. You can then build the assembly at a later time. This is helpful if you want to conserve resources when uploading multiple assemblies.

You must select the 'top level assembly' file to upload, as this file determines how the part files are arranged to create an assembly.

After you have uploaded assembly files and entered associated metadata, you can click the Search tab (on page 182) to search the metadata for those assets.

Note: The file types that can be uploaded or set as a main file are dependant on the modules installed for Deep Server. See your Systems Administrator for further information.

Copyright © Right Hemisphere 2006. All Rights Reserved.

Procedures

To upload an assembly:

1. Right-click a server or folder node in the Assemblies tab.
2. Click **Upload Assembly**. The Upload Assembly dialog is displayed.
3. Click **Browse**.
4. Navigate to, and select the folder that contains the assembly and part files that you want to upload.
5. Click **OK**. The assembly files are displayed in the Assembly files window.
6. Do one of the following:
   - Select individual files in the Assembly files window to upload single files.

     Note: You can hold down SHIFT to select adjacent files or CTRL to select non-adjacent files.

   - Click **Select All** to upload all files.
7. Click **Add**. The files are added to the added files window.
8. Select the assembly file in the added files window and click **Top Level**.
9. Select a project in which to group the assembly.
10. Select a processing method to apply to the asset.
11. Enter one or more category keywords in which to group the uploaded assembly.
12. Enter one or more metadata keywords, separated by spaces, by which the assembly can be searched.
13. Select the 'Referencing' check box to reference all assembly files to their original location instead of packed in a .zip file. 'Referenced" files must be in a shared directory in which Deep Server has rights to access.
14. Do one of the following:
    - Select the 'Build assembly' check box and click **Upload** to upload the files and assemble them into an .rh file.
    - Click **Upload** to upload the files without assembling them into an .rh file.
15. Click **OK**. The assembly files are queued for processing in Deep Server.

    Note: You click Abort at any point to cancel the upload process.

16. Click **Refresh**. Once the assembly files have been processed and uploaded, they are displayed in the Assemblies tab.

To remove assembly files from the added files window, do one of the following:

- Select individual files in the added files window and click **Remove** to remove single files.
- Click **Remove All** to remove all files.

  Note: You can hold down SHIFT to select adjacent files or CTRL to select non-adjacent files.

Downloading Assets and Items

Gateway panel > Assets tab > Right-click file > Download asset
Gateway panel > Assemblies/Assets tab > Right-click file > Download Derivative
Gateway panel > Assemblies/Assets tab > Right-click file > Download All Derivatives
Gateway panel > Assemblies/Assets tab > Right-click file > Download Derivative as Link
Gateway panel > Assemblies/Assets tab > Right-click folder node > Download All Subgroups

You can download assets, derivatives, associated files, and Internet links for those items to your computer. You can also download sub-assemblies and part files (that is, sub-assemblies and part files). The downloaded files can then be used to embed 2D and 3D content (on page 133) in Office and Adobe PDF documents.

Files are downloaded to temporary sub-folders that are named according to the assets assigned categories (on page 178), but they can be removed (on page 185) as required. By default, these sub-folders are created in the 'My Documents\My 3D Models\Gateway' folder (temporary files folder). However, you can use the Preferences dialog (on page 327) to choose an alternate folder location as required. If the contents in the temporary files folder exceed the cache size (on page 327), Deep Server deletes the first files in the list to make room for new files as they are downloaded.

Note: If you are downloading a single asset that is part of an assembly or sub-assembly, you get the 3D RH Preview format. If you are downloading an asset that is not part of an assembly or sub-assembly, then you get the original asset.

When downloading derivatives, you can select to download only the base derivative (RH 3D Preview file), or all derivatives of the selected file.

Links are dynamic, in that they are linked to the most recent version of that item; if you embed a link into an Office document and the related item is modified, you can upload the most recent version of the item to Deep Server Web and the document link is automatically updated.

Note: Please see your Systems Administrator for further information for information on Deep Server Web.

Viewport Display

- Whenever you click an item in a Gateway tab (on page 313), it is downloaded to the temporary files folder automatically, and displayed in the viewport.
- Items must be downloaded before they can be displayed in the Deep Exploration viewport via clicking that item in the Gateway tree (on page 249). All the derivatives, associated files, and subgroups that correspond to that item are then also displayed in the Gateway tabs.

Procedures

To download an asset, do one of the following in the Gateway panel:

- Click the 'download' button  for the asset you want to download.
- Right-click the asset in the Assets tab, and then click Download **Asset**.

The asset is downloaded and displayed in the viewport and the 'downloaded' button  is displayed beside the asset in the Gateway panel.

To download derivatives:

1. Do one of the following in the Gateway panel:

Copyright © Right Hemisphere 2006. All Rights Reserved.

- Click the 'download' button  for the item whose base derivative you want to download. The base derivative is downloaded. If the item is an associated asset, the original asset is also downloaded.
- Right-click the item in the Assemblies or Assets tab, and then click **Download Derivative** to download the base derivative of the selected item. The base derivative is downloaded. If the item is an associated asset, the original asset is also downloaded.
- Right-click the item in the Assemblies or Assets tab, and then click Download **All Derivatives** to download all derivatives of the selected item. All derivatives of the selected item are downloaded.

The selected item is displayed in the viewport, and the 'downloaded' button is displayed beside each item in the Gateway panel.

To download a derivative as a link:

1. Right-click an item in the Assemblies or Assets tab.
2. Click **Download Derivative as Link**.

The derivative link of the selected item is downloaded.

To download all subgroups:

1. Right-click the item, for which you want to download all subgroups, in the Assemblies tab.
2. Click **Download All Subgroups**.

All base derivatives of the selected item's child nodes or assets are downloaded and the 'downloaded' button is displayed beside each item in the Gateway panel.

Searching for Assets

Gateway panel > Search tab > Basic Search
Gateway panel > Search tab > Advanced Search

You can perform customized searches for assets. Once assets are located, you can download (on page 180) them to your computer, and browse and view (on page 184) the assets, derivatives, associated files, and subgroups.

There are two methods of searching for assets:

- **Basic Search**—Performed using one field to search for keywords via the Basic Search tab.
- **Advanced Search**—Performed on a number of fields to narrow your search using multiple criteria via the Advanced Search tab. This criteria includes asset name, category, date created, file name, file size, instance name, metadata, and project.

A basic search consists of the word or a combination of words separated by spaces that you want to find. You can use Boolean, wildcard, and nested expressions. You can also use the advanced search facility to further define your search.

Any assets that match the search criteria are displayed in a Search tab (on page 314) in the File list (on page 310). You can now download and view the files, or modify your search criteria and run a new search.

Note: It is important to distinguish between the Search tab located in the Gateway panel, and the Search tabs that are displayed in the File list whenever a search is performed.

Searching Rules

The basic rules for searching are:

- Searches are not case-sensitive, so you can type your search in uppercase or lower-case characters.
- You may search for any combination of letters (a through z) and numbers (0 through 9).
- Punctuation marks such as the period, colon, semicolon, comma, and hyphen are ignored during a search.
- Group the elements of your search using spaces to set apart each element. These spaces are treated as an AND Boolean expression.
- The asterisk wildcard (*) is used at the beginning and within a set of characters. It is automatically added to the end of each word in a search. If it is added to the end of a word, the wildcard character is ignored.
- You cannot search for quotation marks (").
- Words in the noise word list are not included in your search. These words include commonly used pronouns, adjectives, and verbs. For example 'if', 'my', and 'the'.

Procedures

To perform a basic search:

1. Click the Basic Search tab on the Search tab (on page 313).
2. Enter the keywords (on page 251) on which you want to search.
3. Do one of the following:
   - Click **Search**.
   - Press ENTER on your keyboard.

The base derivatives for all the assets that match the search criteria are displayed in a Search tab (on page 314) in the File list.

To perform an advanced search:

1. Click the Advanced Search tab on the Search tab.
2. Enter the criteria (on page 251) on which you want to search.
3. Do one of the following:
   - Click **Search**.
   - Press ENTER on your keyboard.

Note: You can click Reset at any time to reset the fields and perform a new search.

The base derivatives for all the assets that match the search criteria are displayed in a Search tab in the File list.

To close a Search tab:

Click **Close**  on the tab that you want to close.

Copyright © Right Hemisphere 2006. All Rights Reserved.

Browsing and Viewing Assets and Items

Gateway panel > Assemblies tab
Gateway panel > Assets tab

You can browse and view assets and items in a number of different ways:

- Browse assets and items (on page 178) in the Assembly and Assets tabs.
- Display downloaded files (on page 180) in the viewport via the Assembly and Assets tabs.
- Browse and display items (derivatives, associated files, and subgroups), and located assets via the Gateway tabs (on page 313): the Derivatives, Associated Files, and Subgroups tabs.
- Browse and display located assets via the Search tabs (on page 314).

Assemblies, singular assets, and parts are denoted by the assembly  and single asset/part  icons in the Assembly and Assets tabs.

Procedure

To browse and view assets and items:

1. Expand the nodes in the Assemblies or Assets tab. All assets and items of those nodes are displayed in the Gateway panel.
2. Do one of the following:
   - Click an asset or item node. All derivatives are displayed in the Derivatives tab, all associated files are displayed in the Associated Files tab, and all base derivatives of the selected item's child nodes or assets are displayed in the Subgroups tab. If the asset or item has been downloaded, it is displayed in the viewport.
   - Drag an asset or item into the viewport. If the asset or item has been downloaded, it is displayed in the viewport.
3. Do one or more of the following:
   - Continue to browse and view assets and items in the Assemblies or Assets tabs.
   - Click a located asset in the Search tabs. The asset is downloaded automatically and displayed in the viewport.
   - Click an item in the Gateway tabs. The item is downloaded automatically and displayed in the viewport.

Associated Files

Gateway panel > Assemblies/Assets tab > Right-click file > Upload Associated Files
Gateway panel > Assemblies/Assets tab > Right-click file > Upload Scene as Associated File
Gateway panel > Assemblies/Assets tab > Click file > Associated Files tab

Files can be associated with assets and uploaded using the Upload Associated Files dialog (on page 333); associated files can be any type of file. For example, a Microsoft Word document.

Associated files can be viewed (on page 184) and removed from the temporary files folder (on page 185) as required.

Note: You cannot search for associated files directly; you must first search for the asset and then look in the Associated Files tab (on page 313).

Procedure

To associate and upload a file:

1. Right-click the asset or item node in the Assemblies or Assets tab.
2. Do one of the following:
   - Click **Upload Associated Files**.
   - Click **Upload Scene as Associated File**, enter a name for the new file, and then click **OK**.
3. Click **Add Asset**, then navigate to and select the files that you want to upload.
4. Click **Open**. The files are displayed in the added files window.
5. Click **Upload**.

Updating Assets

Gateway panel > Assemblies tab > Right-click asset or item > Update Asset
Gateway panel > Assets tab > Right-click asset > Update Asset

If an asset has been modified, you can update it and all its derivatives using the Update Asset dialog (on page 334). Note that you can only update single assets, not assembly or part files.

Procedure

To update an asset and its derivatives:

1. Right-click the asset in the Assets tab and click **Update Asset.**
2. Click **Add Asset**, and then navigate to and select the assets that you want to update.
3. Click **Open**. The asset files are displayed in the added files window.
4. Select the check boxes for the assets you want to update.
5. Click **Update**.

The asset and all its derivatives are updated in Deep Server.

Note: You click Abort at any point to cancel the update process.

Removing Assets and Items

Gateway panel > Assemblies/Assets tab > Right-click asset or file > Remove Derivative from Cache
Gateway panel > Assets tab > Right-click asset or file > Remove Asset from Cache

Gateway can be used to remove assets, base derivatives, and associated files that have been downloaded to your computer (on page 180).

Procedures

To remove a derivative or associated file:

1. Right-click the file that you want to remove in the Assemblies or Assets tab.
2. Click **Remove Derivative from Cache**.

The base derivative is removed from the temporary files folder.

Copyright © Right Hemisphere 2006. All Rights Reserved.

To remove an asset:

Right-click the asset that you want to remove in the Assets tab, and click **Remove Asset from Cache**.

Deleting Assemblies

Gateway panel > Assemblies tab > Right-click assembly > Delete Assembly from Server

Gateway can be used to delete assemblies from the server databases.

Procedure

To delete an assembly:

1. Right-click the assembly file you want to remove in the Assemblies tab.
2. Click **Delete Assembly from Server**.
3. Click **Yes**.

The assembly is deleted.

Viewing and Modifying Properties

Gateway panel > Assembly/Asset tab > Right-click node > Properties

You can view properties of any node displayed in the Gateway panel, using the Gateway Properties Dialog (on page 331). For example, server, folder, and file (asset or derivative) nodes. You can view:

- The node name, type, location, and contents. For example, projects within a server node, or sub-assemblies, and parts within an assembly node.
- The category, metadata, and version details for assembly nodes.
- Server security certificates.
- Server supported processing methods. A processing method is a series of events based on the kind of output required for each asset, that determine how assets are treated by a Deep Server after uploading.
- Server supported 3D asset and assembly formats. For example, .rh and .dwg, .asm, and .catproduct.

You can also edit server names.

Procedures

To view node properties:

1. Right-click the node for which you want to view the properties in the Assemblies or Assets tab.
2. Click **Properties**.

To modify server node properties:

1. Right-click the server node in the Assemblies or Assets tab.
2. Click **Properties**.
3. Make the selections you require and click **OK**.

Refreshing the Gateway Panel

Gateway panel > Right-click in Assemblies tab > Refresh
Gateway panel > Right-click in Assets tab > Refresh

You can refresh the Gateway panel to show you the latest folder structure and latest files. For example, if any projects have been added, assets uploaded and removed, or assemblies deleted.

Procedure

To refresh the Gateway panel:

1. Right-click in the Assemblies or Assets tab.
2. Click **Refresh.**

Modifying Preferences

Gateway panel > Right-click in Assemblies tab > Preferences
Gateway panel > Right-click in Assets tab > Preferences

The Preferences dialog (on page 327) can be used to view and modify the Gateway preferences including file locations, available disk space, file storage settings, and server details.

Procedure

To modify preferences:

1. Right-click an empty area in the Assemblies or Assets tab.
2. Click **Preferences**. The Preferences dialog is displayed.
3. Make the selections you require.
4. Click **OK**.

Copyright © Right Hemisphere 2006. All Rights Reserved.

PDF Publishing Module

The PDF Publishing Module is used to save files to the Adobe Portable Document (.pdf) format. Any 3D content contained within these files is converted to the Universal 3D (.u3d) format (on page 485).

The .pdf file format (Portable Document Format), developed by Adobe, is used for representing documents in a manner that is independent of the original application software, hardware, and operating system used to create those documents. A .pdf file can describe documents containing any combination of text, graphics, and images in a device independent and resolution independent format.

Note: The .u3d format, adopted by Adobe, is required and used as the 3D publishing format in Adobe Acrobat 3D.

Templates

The PDF Publishing Module is delivered with several templates that can be used to publish PDF documents:

- **RH CATIA PMI Template:** Used to display 3D content, the Bill of Materials (BOM) (on page 126), model views, (on page 75) and Product Manufacturing Information (PMI) (on page 194). We recommend using this template for all .pdf files except ones created from .jt files.
- **RH JT PMI Template:** Used to display 3D content, the BOM, model views, and PMI. We recommend using this template for .pdf files created from .jt files.
- **RH Simple Animation Template:** Used to display 3D content and to control animation (on page 101).
- **RH Steps Template:** Used to display 3D content, and to control steps (on page 164) and step animation.

These templates are stored in the 'PDF_Publishing\PDF_Templates' folder where the PDF Publishing Module is installed. You can also create your own templates in Adobe Designer using the RH objects (on page 188) installed with the Designer Objects Module and located in the Designer library palette.

Note that the templates must be saved in the 'Static PDF Form File (*.pdf)' format. Please see the Adobe Designer Help for further information.

Hints and Tips

For best results with the least artifacts when creating more complex templates:

- Create background images using Adobe Photoshop:
  - Use a resolution of 100 pixels per inch.
  - Save images using the File > Save for Web command to the PNG-24 format.
- Create templates using Adobe Designer:
  - Place static objects in the Master Page. For example, background images, borders, and logos.
  - Place dynamic objects in the Master Page. For example, buttons.
  - When moving designer objects, ensure you first select the entire object and all sub-objects, and then move them by dragging in the viewport.
  - Helpful tools can be found in the View menu, and in the Window Drawing Aids.

RH Objects

A number of 'RH objects' are installed to Adobe Designer when you install the Designer Objects Module. These are used to edit the templates delivered with the PDF Publishing Module, or to create new templates. They can then be used to publish PDF documents via the PDF Publishing Module. You can edit RH objects in the same way as you edit normal Adobe Designer objects.

RH objects are located in the Designer library palette on the RH Standard, RH Steps, RH PMI, and RH 2D tabs within Designer. These tabs are based on different workflows. For example, RH objects that may be required for producing PDF documents relating to steps are located on the RH Steps tab.

Object functionality is specific to the workflow tabs in which they are located; you should use RH objects in their related templates to ensure that they function correctly. For example, if you use the Step Description Block object in the RH_Simple_Animation_Template, the object may not function correctly.

RH objects can be grouped as follows:

- **3D Scene:** Displays the scene in the document.
- **Buttons:** Used to control various aspects of the 3D scene including animation, 3D object display and views display.
- **Drop-down lists:** Used to select from a list of items for display in the document.
- **Text fields:** Displays various information about the scene.
- **Text:** Displays the text entered into the object's caption.
- **Images:** Displays the 2D image added to the template.

Note: For security, the JavaScript code for these objects is obfuscated.

Please see the Adobe Designer Help for further information.

RH Object Properties

Many RH objects function in the same way as Adobe Designer objects; others have dependencies that must be addressed before the object will function correctly. These can be one or more of the following:

- Properties may need to be established once the PDF document has been saved. For example, the Animation Speed (Numerical) object requires you to enter the playback speed for the default animation sequence.
- Various metadata information can be displayed depending on the keyword selected in the PDF document. For example, the 'Step Document Metadata' object is used to display the metadata content related to the metadata keyword for the current file.
- Objects captions may need to be renamed. For example, the 'Step Document Metadata' object must be renamed with the metadata keyword name.
- Objects may be dependant on other RH objects being included in the same template. For example, one of the 'Steps List' objects must be included in a template to ensure the 'Step Document Metadata' object drop-down list is populated.

RH Standard Objects

RH standard objects are used to produce PDF documents relating to standard workflows including BOM (on page 126), model views (on page 75), animation (on page 101), and materials (on page 98).

Many RH objects function in the same way as Adobe Designer objects; others relate directly to Right Hemisphere technology, and many have dependencies that must be addressed before the object will function correctly. Here, we describe only the objects that have dependencies.

Copyright © Right Hemisphere 2006. All Rights Reserved.

Interface

Animation Speed (Numerical)—Used to set the playback speed for the default animation sequence. That is, the speed the sequence plays as a multiple of the real-time speed. For example, if the sequence is 10 seconds long and you enter 0.5, it will take 5 seconds to play. However, if you enter 2, the sequence will take 20 seconds to play. This object is used in conjunction with the VCR animation buttons.

- 0=slow (half speed).
- 100=normal (default speed).
- 200=fast (twice the speed).

Animation Speed (Presets)—Used to modify the playback speed for the default animation sequence. This object is used in conjunction with the VCR animation buttons.

- **Slow**—The animation plays at half the rate of the real-time speed.
- **Normal**—The animation plays at the real-time speed.
- **Fast**—The animation plays at twice the rate of the real-time speed.

Background Color—Used to select the 3D model's background color.

Note: You can select the default background color, displayed when the PDF document is first opened, from within Adobe Designer > Window > Object tab > Value tab > select the value in the Default field. Note that these values are RGB values. The Binding tab displays the RGB values' corresponding colors. You can also add new colors and hide the object in the PDF document. For further information, please refer to the Adobe Designer Help.

BOM Parts List—Displays the BOM if one exists in the current file. When the file is saved into .pdf format, you can select each part in the BOM list to display the part and any related PMI data if the part has an associated view. Note that if the Views Controller object is used in the same template, the related views list changes depending on the part selected in the BOM list.

Note: PMI BOM information is displayed using the PMI BOM Controller object.

Material Color Button—Used to enter a RGB value to adjust the appearance of the model's material for the ambient, diffuse, emissive, or specular light color. You must rename the object using the format: [prefix]_R_G_B, using the prefixes in the following list, to ensure the value is applied to the correct light color. For example, if you named the object 'dc_0_0_0', the diffuse light color black. The button's caption must also be identical to the material name to ensure the color is applied to the material.

- **ac**—The ambient light color.
- **dc**—The diffuse light color.
- **ec**—The emissive light color.
- **sc**—The specular light color.

Note: The material name is case-sensitive.

Selected Part Name—Displays the name of the part selected in the final PDF document.

View Controller—Displays a list of all the model views contained within the current file, for the selected part. When the file is saved into .pdf format, you can select each view in the list to display the view. Note that if the BOM Controller object is used in the same template, the views list changes depending on the part selected in the BOM list.

View Named Button—Used to activate the selected model view of the 3D model. The button's caption must be identical to the model view name to ensure the view is displayed.

Note: The view name is case-sensitive.

RH Steps Objects

RH steps objects are used to help produce PDF documents relating to steps (on page 164) workflows.

Many RH objects function in the same way as Adobe Designer objects; others relate directly to Right Hemisphere technology, and many have dependencies that must be addressed before the object will function correctly. Here, we describe only the objects that have dependencies.

Interface

Step Buttons—Used to control movement between any steps contained in the current file. For example, you can move between individual steps or play all the steps in succession.

Step Document Metadata (Drop-down)—Used to select a global metadata keyword (on page 166) to display the related metadata content for the current file. When the file is saved into .pdf format, you select from a list of keywords to display the related content. Note that the drop-down list is populated when you activate a step in the saved PDF document. As such, you must also include one of the Steps List objects in your template.

Note: This object does not include any specific keyword names and as such, a template that includes this object can be used many times for different model files.

Step Document Metadata—Displays the metadata content related to the global metadata keyword. That is, for the current file. If the keyword exists in the file, the related content is displayed. Otherwise, no content is displayed. To ensure the content is displayed, you must rename the object with the metadata keyword name; this name is located in the step's description (on page 292).

Note: This object includes a specific keyword name and as such, a template that includes this object should only be used with the related model file.

Steps List (Names Only)—Displays the names of any steps contained in the current file. When the file is saved into .pdf format, you then select from a list of step names to display the related content.

Note: The step's name is established in the Step Properties dialog (on page 292).

Steps List (Step Numbers)—Displays the number of each step contained in the current file. These numbers are generated automatically. For example, the first step is Step 1, the second step is Step 2, and so on. When the file is saved into .pdf format, you select from a list of step numbers to display the related content.

Step Metadata (Drop-down)—Used to select a step metadata keyword (on page 166) to display the related metadata content for the current step. When the file is saved into .pdf format, you then select from a list of keywords to display the related content. Note that the drop-down list is populated when you activate a step in the final PDF document. As such, you must also include one of the Steps List objects in your template.

Note: This object does not include any specific keyword names and as such, a template that includes this object can be used many times for different model files.

Step Metadata—Displays the metadata content related to the step metadata keyword. That is, for the current step. To ensure the content is displayed, you must rename the object with the metadata keyword name; this name is located in the step's description (on page 292). If the keyword exists in the file, the related content is displayed. Otherwise, no content is displayed.

Note: This object includes a specific keyword name and as such, a template that includes this object should only be used with the related model file.

Step Named Button—Activates the selected step. The button's caption must be identical to the step name to ensure the step is displayed. To ensure the step is activated, you must rename the object with the metadata keyword name; this name is located in the step's description (on page 292)

Copyright © Right Hemisphere 2006. All Rights Reserved.

Note: The step name is case-sensitive.

Step VCR Buttons—Used to control any animation contained in the current step. For example, you can play and pause step animation.

RH PMI Objects

RH PMI objects are used to help produce PDF documents relating to PMI (on page 194) workflows including BOM (on page 126), and model views (on page 75).

Many RH objects function in the same way as Adobe Designer objects; others relate directly to Right Hemisphere technology, and many have dependencies that must be addressed before the object will function correctly. Here, we describe only the objects that have dependencies.

Note that you must have the PMI module installed to be able to use RH PMI objects.

Interface

Notes Block—Displays any PMI metadata (on page 302) notes of the part selected in the final PDF document.

PMI BOM Parts List—Displays the PMI BOM if one exists in the current file. When the file is saved into .pdf format, you can select each part in the PMI BOM list to display the part and any related PMI data if the part has an associated view. Note that if the PMI Views Controller object is used in the same template, the related views list changes depending on the part selected in the PMI BOM list.

Note: Standard BOM information is displayed using the BOM Parts List object.

PMI View Controller—Displays a list of all the PMI model views contained within the current file, for the selected part. When the file is saved into .pdf format, you can select each view in the list to display the view. Note that if the PMI BOM Controller object is used in the same template, the views list changes depending on the part selected in the PMI BOM list.

Title Block—Displays the PMI metadata title of the part selected in the final PDF document.

Tolerance Block—Displays any PMI metadata tolerance information of the part selected in the final PDF document.

RH 2D Objects

RH PMI objects are used to help produce PDF documents relating to standard 2D workflows.

Many RH objects function in the same way as Adobe Designer objects; others relate directly to Right Hemisphere technology, and many have dependencies that must be addressed before the object will function correctly. Here, we describe only the objects that have dependencies.

Interface

Company Logo—Displays the selected company logo.

Note: You can select the logo from within Adobe Designer > Window > Object tab > Draw tab > and navigating to and selecting an image in the URL field.

Reader 7.07 Required—Displays a message that Adobe Reader 7.07 is required to be able to 'read' .pdf files.

Publishing to PDF

Using the PDF Publishing Module, you can save files (on page 56) containing 3D content to the .pdf format using a PDF template.

When you choose to save a file to this format, you can modify the export properties and apply them to the file. For example, you can choose the template with which to save the file, and you can include customized and parts list metatdata in the document's properties. These properties are described in detail in Adobe Portable Document 3D Export (on page 380), Vector Illustration Settings Dialog (on page 381), and Metadata Dialog (on page 381).

For further information regarding 3D interactivity within PDF documents, please see the Adobe Acrobat Professional Help delivered with Adobe Acrobat 3D.

Procedure

To publish to a PDF document:

1. Open and modify the file as you require.
2. Do one of the following:
   - Choose **File > Save As** on the menu bar.
   - Click **Save As** on the Standard toolbar.
3. Browse for the directory where you want to save the file.
4. Enter a name for the file.
5. Select 'Adobe Portable Document 3D file (*.pdf)' as the format in which you want to save the file.
6. Do one of the following:
   - Click **Settings**, modify the properties as required, click **OK**, and then click **Save**.
   - Click **Save**.

Copyright © Right Hemisphere 2006. All Rights Reserved.

PMI Module

Product Manufacturing Information (PMI) is an implementation of the 'Digital Product Definition Data Practices', which establishes requirements for preparing, organizing, and interpreting three-dimensional digital product images. The PMI Module provides a way to render PMI data such as tolerances, dimensional data, and other markup annotations.

PMI comprises different types of markups and conveys information on the design of a product's components for manufacturing. The PMI Module is a plugin for Deep Exploration CAD Edition and is used to extract and display all the PMI data and any associated metadata from within CATIA 5 and JT files.

After the PMI Module is installed, Deep Exploration automatically displays the PMI toolbar (on page 301) for files that contain PMI data. You must first import the PMI data contained within a file via the file's import properties (on page 43) in order to view that data. You can then establish PMI settings and select the various types of PMI markups to display.

The PMI markups are:

- **Text:** Text markups.
- **Rich text:** Special formatted text markups.
- **GD&T:** Measurements, tolerances, material data, and reference datum.
- **Dimensions:** Detailed dimension line markups.
- **Datum:** Special reference points or planes for measurement markups sometimes shown as a single letter enclosed within a box.
- **Metadata:** Attributes and properties that are associated with a part when it was created.

The PMI markups that a file can display depend on the file type as follows:

File Format	Text	Rich Text	GD&T	Dimensions	Datum
JT	Yes	No	Yes	Yes	Yes
CATIA 5	Yes	Yes	Yes	Yes	Yes

Using the PMI Module, you can:

- View and hide PMI markups (on page 195).
- Edit markups (on page 141).
- Delete markups (on page 144).
- View metadata associated with the current file (on page 302).
- Modify the PMI markup settings (on page 303).

PMI Data Rules

Certain rules apply when viewing PMI data:

- The JT Module must be installed to view any PMI data stored within JT supported file formats.
- You must import the PMI data contained within a file in order to view that data.
- If you are using the Deep Publish (http://www.righthemisphere.com/deeppublish) or Deep View (http://www.righthemisphere.com/deepview) viewing application to view models, PMI data is automatically displayed if it exists in the current .rh file.
- As .jt file PMI BOM data is derived from the BOM in the file itself when publishing to PDF documents (on page 188), you must ensure that all object names in the Scene tree match those in the PMI metadata. This ensures that the assembly structure is maintained so all objects and assemblies can be viewed via the BOM in the published PDF document.

Markup Naming Conventions

Markups within JT files must be include certain text to ensure the markups' related metadata can be displayed. The markup text strings are:

- BOM: Only markups that include 'BOM' in the name, and for which the associated metadata strings are over 0 characters long, are displayed as metadata.
- NOTES: Only markups that include 'NOTES' in the name, and for which the associated metadata strings are over 100 characters are displayed as metadata.
- NT: Only markups that include 'NT' in the name, and for which the associated metadata strings are over 100 characters are displayed as metadata.
- TITLE: Only markups that include 'TITLE' in the name, and for which the associated metadata strings are over 50 characters are displayed as metadata.
- TOLERANCE: Only markups that include 'TOLERANCE' in the name, and for which the associated metadata strings are over 0 characters long, are displayed as metadata.

For example, if a markup included the text 'Apples', the metadata would not display.

Procedure

To begin using PMI, do one of the following:

- Choose **View > Toolbars and Controls> PMI** on the menu bar.
- Right-click the application menu bar and click **PMI**.
- Right-click the application menu bar and choose Customize Layout > Toolbars tab, select the PMI check box, and then click **OK**.

Note: If a part contains PMI, Deep Exploration automatically loads the PMI toolbar.

Viewing and Hiding Markups

PMI toolbar > Text
PMI toolbar > Rich Text
PMI toolbar > GDT
PMI toolbar > Dimensions
PMI toolbar > Datum
PMI toolbar > Metadata
PMI toolbar > Show/Hide Metadata

The PMI toolbar can be used to display and hide the various PMI markups including displaying on-screen metadata, metadata associated with the file, and showing and hiding individual PMI markups depending on their data type.

If a markup is associated with a surface, clicking the markup highlights the object's surface. Non-renderable PMI metadata can be displayed in the Metadata dialog (on page 302).

Procedures

To view individual PMI markups:

1. Open a 3D file (on page 42) ensuring all PMI data is imported (on page 43).
2. Ensure the Display > Show Markups command is selected on the menu bar.
3. Do one of the following on the PMI toolbar for the current model view:

- Click **Text**  to view basic lines and vectors markups.

Copyright © Right Hemisphere 2006. All Rights Reserved.

- Click **Rich Text**  to view special formatted text markups.
- Click **GDT**  to view measurements, tolerances, material data, and reference datum markups.
- Click **Dimensions**  to view dimension line markups.
- Click **Datum**  to view special reference points or planes for measurement markup.
- Click **Metadata**  to open the Metadata dialog and view associated metadata.
- Click **Show/Hide Metadata**  with on-screen metadata hidden.

To hide markups, do one of the following:

- With the PMI data displayed, click the related markup button on the PMI toolbar for the type of markup you want to hide.
- Clear the Display > Show Markups command on the menu bar to hide all PMI markups.

Closing Deep Exploration

Menu bar > File > Exit
Click Close button

Deep Exploration can be closed in one of two ways, similar to the functionality in most Windows applications. If files are being transferred when you close the application, the transfer is cancelled.

Procedure

To close Deep Exploration, do one of the following:

- Click **File > Exit** on the menu bar.
- Click the **Close** button  in the top, right corner of the application.

Copyright © Right Hemisphere 2006. All Rights Reserved.

User Interface

The software's user interface provides multiple ways to achieve the same goals. It consists of a number of components including the menu bar, the Explorer bar, Information bar, File list, Status bar, and Animation controls. There are also a number of different toolbars, a viewport, and various right-click menus.

Many of the components can be resized, moved, floated, docked, rearranged, and closed (on page 345) similar to the functionality in most Windows applications. For example, you can resize the Explorer bar by dragging the bar's edges, and you can drag files and folders within the Folders panel. Components are displayed as docked by default and have a Windows-type interface.

See the topics referenced below for detailed information on all of the user interface components.

Interface

Application title bar—The current file name, path, and protection status.

Menu bar (on page 199)—Provides access to the main menu commands.

Controls (on page 253)—Tools that give you added functionality for managing and modifying files and file display.

Toolbars (on page 294)—Sets of buttons for commands relating to standard and additional module (on page 15) functionality.

Explorer bar (on page 241)—Used to display the Folders panel, the Favorites and History lists, the Search panel, and the File list tabs.

Information bar (on page 262)—Displays various file, object, and material information relating to the current file depending on the viewport selection.

Scene Components panel (on page 266)**—**Comprises the Scene tree, Materials list, Parts and Layers panels, and Animation tree. It presents, and is used to control all of the scene’s 3D objects, materials, parts, animation, and layers from within a tree-view hierarchy.

Workspace (on page 240)—Comprises one or more viewports (on page 240) used to view and modify the currently opened file. For example, a 3D scene or 2D image.

File list (on page 310)**—**Displays all files and folders contained within the current folder, all files that match the search criteria after performing a search, all files contained within the 'My 3D Models' folder, and all the available material, texture, and shader files. It can be used to perform a number of functions including establishing file properties, refining searches (on page 53), dragging textures and shaders onto models, and generating thumbnails.

Status bar (on page 344)—Displays various information relating to the current file and display renderer (on page 209).

Animation controls (on page 254)—Provides controls for animated scenes.

Right-click menus (on page 315)—Sets of commands relating to the standard functionality.

Menu Bar



The menu bar is located directly under the main window title bar. The menu bar uses standard Microsoft Windows conventions.

The available commands differ depending on the scene selection, the current format, the selected display renderer (on page 209), the graphics card installed on your computer, and the Explorer bar display (on page 241). Others only become available if you if the current 3D file is animated. For example, if you have a 2D file open and the History list displayed, the File menu commands, Merge File, Save Frames, Search Active Folder, and Go To Folder commands are inactivate. However, if you have an animated 3D file open and the Folders panel displayed, all commands are active.

Many of these commands are global and override the viewports commands. For example, if you display a viewport in the Wireframe render mode and another viewport in the Line Illustration mode, selecting the Solid render mode from the Display menu displays all viewports in Solid mode.

Interface

File Menu (on page 199)

Edit Menu (on page 205)

View Menu (on page 206)

Display Menu (on page 208)

Create Menu (on page 212)

Rendering Menu (on page 212)

Favorites Menu (on page 219)

Tools Menu (on page 219)

Help Menu (on page 238)

File Menu

Menu bar > File

The File menu is used to manage 2D and 3D files. The available options differ depending on the current file type, whether the file is animated, and on the current of Explorer bar view (on page 241).

Interface

New—Opens a new empty scene.

Open (on page 200)

Merge File (on page 200)

Save As (on page 201)

Save Frames (on page 202)

Batch Operations (on page 202)

Copyright © Right Hemisphere 2006. All Rights Reserved.

Search Active Folder—Opens the Search Active Folder and is used to search through the folder and all its sub-folders for files.

Go To Folder—Opens the 'Go To Folder' dialog and is used to move to the folder of your choice.

Printer Setup—Lets you set up your page layout.

Print—Prints the current image on the selected printer.

Always On Top—Specifies that Deep Exploration is placed over all windows and stays above them, even when the application is deactivated.

Exit (on page 197)—Quits the program. If files are being transferred when you close the application, the transfer is cancelled.

Open

Menu bar > File menu > Open

You can use the Open command to open supported files (on page 42). The Open dialog is displayed from where you can locate the file you want to open. You can also modify properties for selected file types (format) and import the files (on page 43).

Interface

Look in—The folder that contains the file you want to open.

File name—The name of the file you want to open.

Files of type—The format of the file you want to open.

Settings—Opens the Import Properties dialog for the selected file type to establish settings and import the file. Note that you must select a file type that contains import properties in the 'Files of type' field for this button to be enabled.

Open—Opens the selected file, or if you have modified the file's import properties, imports the file.

Cancel—Cancels the process and closes the dialog. Any changes made to the settings are lost.

Help—Opens the relevant Help topic.

Merge File

Menu bar > File menu > Merge File

You can use the Merge File command to merge files (on page 54) into the current scene. The Open dialog is displayed from where you can locate the file you want to merge.

Various merge options can be selected to choose the components you want to merge and how they are imported into the current file.

You can also merge objects by dragging files from the File list.

Interface

Look in—The folder that contains the file you want to merge.

File name—The name of the file you want to merge.

Files of type—The format of the file that you want to merge.

Merge Options (on page 201)—Used to establish settings for merging the files.

Open—Opens the selected file, or if you have modified the file's import properties, imports the file.

Cancel—Cancels the process and closes the dialog. Any changes made to the settings are lost.

Help—Opens the relevant Help topic.

Settings—Opens the Import Properties dialog for the selected file type to establish settings and import the file. Note that you must select a file type that contains import properties in the 'Files of type' field for this button to be enabled.

Merge Options Dialog

Menu bar > File menu > Merge File

When merging files, you can You can use the Merge File command to merge files (on page 54) into the current scene. The Open dialog is displayed from where you can locate the file you want to merge.

You can also merge objects by dragging files from the File list.

Interface

Animation—Merges all animation from the selected file scene.

Cameras—Merges all cameras from the selected file scene.

Lights—Merges all lights from the selected file scene.

Group imported objects—Place all the imported objects from the scene into one group.

Use existing materials—Uses the materials that exist in the current file.

OK—Saves your merge settings and moves you back to the main dialog.

Cancel—Closes the dialog. Any changes made to the settings are lost.

Save As

Menu bar > File menu > Save As

The Save As dialog is used to establish save settings for the selected file type (format). The available options differ depending on the type of file that you are saving (on page 56); whether the current file is a 2D image or a 3D model.

For example, if you save a file in the .jpg format, the Image Quality option becomes available.

Interface

File name—The name for the saved file.

Save as type—The format in which you want to save the file.

Objects to save—Used to select the objects you want to save in the file.

- **All scene objects—**Saves all scene objects.
- **Visible objects only—**Saves only visible objects.
- **Active scene objects only—** Saves only active objects.

Save—Saves the file in the selected format with the current export settings. Those same settings are then applied whenever a file is saved to that same format until they are next modified.

Copyright © Right Hemisphere 2006. All Rights Reserved.

Cancel—Closes the dialog. Any changes made to the settings are lost.

Help—Opens the relevant Help topic.

Show Export Dialog—Opens the Export Properties dialog for the selected file type to establish settings for the file.

Save Frames

Menu bar > File menu > Save Frames

If a file has animation, you can use the Save Frames command to generate sequences of 3D files with separate files for each animation frame. The Save As dialog is displayed from where animation options (on page 255) can be set.

Interface

File name—The name for the saved file.

Save as type—The format in which you want to save the file.

Objects to save—Used to select the objects you want to save in the file.

- **All scene objects—**Saves all scene objects.
- **Visible objects only—**Saves only visible objects.
- **Active scene objects only—** Saves only active objects.

Time Output—Used to specify the animation range.

- **All animation sequence [current number of frames]—**Saves the total number of frames as individual image files. That is, as a sequence of images. The number of files that are created equals 'seconds duration*FPS'. For example, if the animation is five seconds long and the FPS=30, 150 files are created.
- **Range—**Used to specify the first and last frame numbers to save that number of image files.
- **Custom frames**—Used to specify a custom number of frames to save as individual image files. That is, as a sequence of images. For example, if the animation is five seconds long and the FPS=30, usually 150 files would be created. However, if you enter 50 in the Frames field, only 50 files are created.
  - **Frames**—Determines the number of frames to save as individual image files.

Save—Saves the file in the selected format with the current export settings. Those same settings are then applied whenever a file is saved to that same format until they are next modified.

Cancel—Closes the dialog. Any changes made to the settings are lost.

Help—Opens the relevant Help topic.

Settings—Opens the Export Properties dialog for the selected file type to establish settings for the file.

Batch Operations

Menu bar > File > Batch Operations

The Batch Operations menu is used to convert, or render and convert all files in the File list (excluding CAD files). Note that for 3D files, conversion can be performed on a maximum of 25 files.

Note: You can also access these commands via a Folders panel right-click menus (on page 325).

Interface

Convert 3D Files (on page 203)—Used to convert 3D files to a 3D format of your choice.

Render 3D Files (on page 203)—Used to render and convert 3D files to a 2D format of your choice.

Convert 2D Files (on page 204)—Used to convert 2D files to a 2D format of your choice.

Convert 3D Files

Menu bar > File > Batch Operations > Convert 3D Files

The Convert 3D Files command is used to convert 3D files, up to a maximum of 25, to the 3D format of your choice.

The Batch Convert 3D Files dialog displays all the 3D files that are located in the current folder, from where you can select the ones you want to convert.

See also Saving Files (on page 56).

Interface

Save as type—Used to select the type format in which to save the files.

- **Settings** (on page 56)—Opens the Export Properties dialog for the selected file type to establish settings for the file.

Overwrite existing—Used to select the action taken if the file being converted already exists in the destination folder.

- **Replace—**Overwrites the existing file.
- **Ask—**Opens a confirmation dialog when a file already exists from where you can decide the action to take.
- **Skip—**Retains the existing file.
- **Rename—**Renames new files if a file of the same name exists in the destination folder.

Save in—Used to select a destination folder for the files.

- **To same folder—**Saves all files to the original folder.

Select All—Selects all displayed files.

Clear All—Clears all files from selection.

Convert—Converts all selected files to the selected format.

Help—Opens the relevant Help topic.

Render 3D Files

Menu bar > File > Batch Operations > Render 3D Files

The Render 3D Files command is used to render and convert 3D files, up to a maximum of 25, to the 2D format of your choice.

The Batch Render 3D Files dialog displays all the 3D files that are located in the current folder, from where you can select the ones you want to convert.

See also Saving Files (on page 56).

Copyright © Right Hemisphere 2006. All Rights Reserved.

Interface

Save as type—Used to select the type format in which to save the files.

- **Settings** (on page 56)—Opens the Export Properties dialog for the selected file type to establish settings for the file.

Overwrite existing—Used to select the action taken if the file being converted already exists in the destination folder.

- **Replace—**Overwrites the existing file.
- **Ask—**Opens a confirmation dialog when a file already exists from where you can decide the action to take.
- **Skip—**Retains the existing file.
- **Rename—**Renames new files if a file of the same name exists in the destination folder.

Save in—Used to select a destination folder for the files.

- **To same folder—**Saves all files to the original folder.

Camera position—Used to select a camera position for the view when the scene is rendered.

- **Default view—**Sets the default camera position. That is, it uses the camera view from the original file.
- **Active camera in current scene—**Sets the active camera position in the current scene.
- **Available scene camera—**Uses the camera properties from the current scene.

Zoom factor—Use the slider to scale the scene from its original size when rendered.

Render Options (on page 215)—Opens the Properties dialog for the selected display renderer and is used to change the render output details.

Select All—Selects all displayed files.

Clear All—Clears all files from selection.

Render—Renders all selected files to the selected format.

Help—Opens the relevant Help topic.

Convert 2D Files

Menu bar > File > Batch Operations > Convert 2D Files

The Convert 2D Files command is used to convert 2D files to the 2D format of your choice.

The Batch Convert 2D Files dialog displays all the 2D files that are located in the current folder, from where you can select the ones you want to convert.

Interface

Save as type—Used to select the type format in which to save the files.

- **Settings** (on page 56)—Opens the Export Properties dialog for the selected file type to establish settings for the file.

Overwrite existing—Used to select the action taken if the file being rendered already exists in the destination folder.

- **Replace—**Overwrites the existing file.
- **Ask—**Opens a confirmation dialog when a file already exists from where you can decide the action to take.
- **Skip—**Retains the existing file.

- **Rename—**Renames new files if a file of the same name exists in the destination folder.

Save in—Used to select a destination folder for the files.

- **To same folder—**Saves all files to the original folder.

Rescale to—Used to rescale images to a specified size in either pixels or percent depending on your selection.

- **Width—**Determines the width of the image.
- **Height—**Determines the height of the image.

Select All—Selects all displayed files.

Clear All—Clears all files from selection.

Convert—Converts all selected files to the selected format.

Help—Opens the relevant Help topic.

Edit Menu

Menu bar > Edit

The Edit menu is used to perform a number of common functions for 2D and 3D files and folders displayed in the File list, including copying, moving and deleting files.

The available commands differ depending on the file type. Many commands are also available using the right-click menus (on page 315).

Interface

Undo—Displays a list of the last 3D Editor (on page 295) actions performed on the current file, up to a maximum of 10. After you perform an undo action, the next action is displayed.

Redo—Displays a list of the last undo actions performed on the current file, up to a maximum of 10. After you perform a redo action, the next action is displayed.

Cut—Removes the selected file from the File list and places it on the clipboard. You can then paste it to another location. Alternately it removes the selected folder and its contents and place them on the clipboard. You can then move it to another location.

Copy—Copies the selected items to the clipboard.

Copy Image—Copies the current 2D image or rendered scene to the clipboard.

Copy Location—Copies the full path name of the current file to the clipboard so you can easily paste it into any text field.

Paste—Inserts the files you have cut or copied into the selected location.

Select All Files—Selects all files in the File list.

Invert Selection—Selects files which are currently not selected and cancels files which are selected.

Select None—Cancels the selection for all files in the current folder.

Copy To—Copies the selected folder and/or files to another location.

Move To—Moves the selected folder and/or files to another location.

Rename—Used to rename the selected file.

Select Objects (on page 289)—Opens the Select Objects dialog and is used to select objects by name, size, polygon count, etc.

Copyright © Right Hemisphere 2006. All Rights Reserved.

Note: This dialog and can also be accessed from the Scene Components panel (on page 266).

View Menu

Menu bar > View

The View menu is used to view and change the display of the application interface in a number of ways including displaying toolbars, different File list views, messages, animation controls, and the timeline.

Interface

Controls (on page 253) **and Toolbars** (on page 294)—Used to show and hide the controls and toolbars, and to customize the user interface components (on page 345).

Explorer Bar (on page 241)—Used to show and hide the Folders, Search, and Gateway panels, the History and Favorites lists, and the File list tabs.

Viewports (on page 61)—Used to select the viewport layout in which to view the current model.

Status Bar (on page 344)—Displays or hides the status bar.

Thumbnails—Displays a thumbnail view with the name of each file in the File list.

Tiles—Displays a tiled view with the name, format, and size of each file in the File list.

Large Icons—Displays a large icon and file name for each file in the File list.

Small Icons—Displays a small icon and file name for each file in the File list.

List—Displays the file names and icons arranged in columns in the File list.

Details—Displays detailed information for each file in the File list.

Sort File List—Used to arrange the file icons in the File list.

- **By Name—**Arranges file icons by name.
- **By Type—**Arranges file icons by type.
- **By Size—**Arranges file icons by size.
- **By Date—**Arranges file icons by by date.
- **3D Files at Top—**Arranges file icons by with all 3D files at the top of the list.
- **Group View—**Arranges file icons by file type. For example, 3D files, material files, and video files.

Refresh—Refreshes the File list display.

Reload File—Reloads the current file in the viewport.

Messages (on page 207)—Opens the Messages dialog to display status, warning, and error messages relating to the current file.

Zoom Active Viewport—Switches between the active single viewport and the multiple viewport layout.

Zoom to Alternate Monitor—Switches the viewport to a second monitor if one is connected to the same computer. All other user interface elements are displayed on the first monitor.

Full-Screen Mode (on page 76)—Displays the entire viewport across your monitor in Full-screen display mode.

Messages Dialog

Menu bar > View > View Messages
Status bar > Double-click message icon

The Messages dialog displays status, warning, and error messages relating to the current file. For example, the status information such as the file version, author, and revision date for individual files. Any files that are required to open a file, and which cannot be found, are also displayed in the Import Log dialog. For example, material, texture, and DLL files.

Individual messages icons indicate the message type:

=Information

=Warning

=Error

Procedures

To display the Messages dialog, do one of the following:

- Choose View > View Messages on the menu bar.
- Double-click the message icon in the status bar (on page 344).

To copy the message information to the clipboard:

Click **Copy to Clipboard**  on the Messages dialog.

Interface

Copy to Clipboard—Copies the message information to the clipboard. You can then paste it to another location.

OK—Closes the dialog.

Customize Layout Dialog

Menu bar > Tools > Customize Layout
Right-click > Customize Layout
Click vertical customize bar > Customize Layout

The Customize Layout dialog is used to customize menu commands, toolbars, ScreenTips, and shortcut keys.

Note that many options within this dialog relate to identical Windows functionality and as such, are not described here. See Customizing the User Interface (on page 345) for further information.

Procedure

To open the Customize Layout **dialog, do one of the following:**

- Choose **Tools > Customize Layout** on the menu bar.

Copyright © Right Hemisphere 2006. All Rights Reserved.

- Right-click the menu bar and click Customize Layout .
- Click the vertical customize bar on a toolbar or control, and then click **Customize Layout**.

Interface

Toolbars tab—Used to control the default display of the toolbars.

- **Reset**—Restores the default display of the toolbars.

Controls tab—Used to control the default display of the controls.

- **Reset**—Restores the default display of the controls.

Commands tab—Used to control the default display of the menu commands.

Options tab—Used to control the default display of toolbar buttons and menu commands.

OK—Applies and saves the settings, and then closes the dialog.

Cancel—Closes the dialog. Any changes made to the settings are lost.

Apply—Applies the settings.

Help—Opens the relevant Help topic.

Display Menu

Menu bar > Display

The Display menu is used to apply render modes (on page 68) to the scene, and control various display elements such as the grid and materials. You can also select the display renderer with which to render scenes while you work.

Many commands are also available using the right-click menus (on page 315).

Interface

Transparent Bounding Box—Displays each object as a transparent bounding box.

Solid—Displays each object as solid.

Transparent—Displays each object as transparent.

Solid Wireframe—Displays each object as solid with a wireframe.

Line Illustration—Displays each object as solid, based on the 'background top' color, with outlines. That is, a solid rendering with outlines overlaid on top.

Solid Outline—Displays each object as solid with outlines. That is, only silhouette and crease edges are shown.

Shaded Illustration—Displays each object as solid with outlines with material color overrides. That is, the objects' material colors can be replaced or blended with other colors using the Display Settings panel (on page 260).

Other—Used to select additional render modes.

- **Bounding Box—**Displays each object as a bounding box.
- **Transparent Bounding Box Outline—**Displays each object as a transparent bounding box with outlines along the edges. Each bounding box is axis-aligned (AABB) instead of the object's actual geometry. An AABB is a box with all its edges parallel to the X,Y, and Z axes, and is the smallest box that can completely contain the given object.

- **Transparent Wireframe—**Displays each object as transparent with a wireframe.
- **Wireframe—**Displays each object as a wireframe.
- **Shaded Wireframe—**Displays each object as a shaded wireframe.
- **Hidden Wireframe—**Displays or hides the wireframe view without any visible hidden surfaces. A similar effect can be obtained using Solid Outline mode with the outline angle set to '0'.
- **Vertices—**Displays all objects as vertices.
- **Shaded Vertices—**Displays all objects as shaded vertices. The shading colors are based on the object's material colors.

Grid (on page 210)—Used to select and display a grid (floor). This is helpful in showing the placement of objects.

Note: The time taken to refresh the scene may increase slightly if you display a grid.

Lights (on page 210)—Used to select and display lights in the scene. Active lights are used in Solid or Transparent mode. Some lighting may be useful when examining certain objects to achieve a sense of depth.

Smoothing (on page 212)—Used to select and display smoothing to objects. This is helpful in improving the look of the objects.

Materials (on page 211)—Used to select and display material settings for the scene.

Show Cross Section (on page 286)—Displays and hides the scene's transparent cross section plane.

Show Depth Cue—Displays or hides the display of the depth cue. Depth cue blurs more distant portions of an image or model, mimicking focal points of a camera; it displays the reverse of perspective depth. This is also an effective way to draw attention to a single portion of the image and is used to see which is front or back of a model's surfaces. This command is only available in Software Z-Buffer mode.

Show Scene Axes—Displays or hides the scene's axes.

Show Vertices—Displays or hides the object vertices.

Show Back-Facing Geometry—Displays or hides any back-facing geometry.

Show Bones—Displays or hides bones.

Show Cameras and Lights—Displays or hides the scene lights and cameras.

Show Markups (on page 167)—Displays or hides markups.

Show Scene Bounding Box—Displays or hides the scene bounding box.

Display Renderer (on page 209)—Used to select the renderer that determines how the scene is rendered while you work.

Display Renderer

Menu bar > Tools > Options > Render > Select renderer > Configure
Status bar > Click renderer icon > Click renderer

The display renderer determines how scenes are rendered while you work. By default, the Software Z-Buffer renderer is selected.

You can change the display renderer at any time. You can also control the settings for the current display renderer using the Render tab (on page 233) in the Options dialog.

Note: If you have the OpenGL graphics driver installed on your computer, you can enable the 3D graphics acceleration card by selecting the OpenGL display renderer to boost rendering speed by three to five times.

Copyright © Right Hemisphere 2006. All Rights Reserved.

Procedure

To change the display renderer, do one of the following:

- Click **Display > Display Renderer** on the menu bar, and then click display renderer you require.
- Click the name of the current renderer in the status bar (on page 344), and then click the renderer you require.

Grid Menu

Menu bar > Display > Grid

Use the Grid menu to select the type and size of the viewport grid (on page 81) or 'floor' of the scene, and whether to display a scene 'shadow'. This enhances the placement of objects making them easier to distinguish.

Note: The time taken to refresh the scene may increase slightly if you display a grid.

See also Display Toolbar (on page 298).

Interface

Wire Grid—Displays a wireframe grid.

Solid Grid—Displays a solid grid.

Transparent Grid—Displays a transparent grid.

No Grid—Hides the grid. The grid size options become redundant when you select this command.

Shadow—Displays and hides the projection of shadows.

Grid sizes—The size of the grid to display in the scene. These options are only applied if you select to display a grid in the scene.

- **1x1**—Displays a 1 by 1 unit grid.
- **2x2**—Displays a grid of 2 by 2 unit grid.
- **3x3**—Displays a grid of 3 by 3 unit grid.
- **4x4**—Displays a grid of 4 by 4 unit grid.
- **5x5**—Displays a grid of 5 by 5 unit grid.
- **7x7**—Displays a grid of 7 by 7 unit grid.
- **10x10**—Displays a grid of 10 by 10 unit grid.
- **15x15**—Displays a grid of 15 by 15 unit grid.

Lights Menu

Menu bar > Display > Lights
Keyboard > ALT+0, ALT+1, ALT+2, ALT+3, ALT+5, ALT+6, ALT+7, ALT+8, ALT+9, ALT+S

The Lights menu contains commands for the display of the scene's lights, which imitate different kinds of real-world light sources such as the sun, office lamps, or stage and film lighting.

Note: The scene's lighting is also affected by the scene's ambient and illumination colors (on page 270).

Interface

Lights from File—Applies any lights that are visible in the Scene tree including any lights loaded from the file, as well as any lights that have since been added to the scene using the 'Create Editable Lights (on page 212)' function. If there are no lights in the Scene tree, the current preset lighting mode is used.

Note: Selecting a preset lighting mode clears this command. Therefore, you must select a preset lighting mode before selecting the Lights from File' command to ensure it functions correctly.

White Lights—Applies white lighting.

Day Light—Applies lighting to simulate daylight.

Hard Lights—Applies hard lighting.

Colored Lights Red/Green—Applies red, blue, and green lighting. The color from each light remains separate from the others.

Colored Lights Blur/Green—Applies blue and yellow lighting. The color from each light remains separate from the others.

Blue Lights—Applies blue lighting.

Marsiano Lights—Applies red lighting.

Cube Lights—Applies cube lighting.

CAD Optimized Lights—Applies lighting that is optimized for CAD files. This should be used in conjunction with CAD files.

Single Light from Eye—Applies a single light originating from the viewer's eye.

No Lights—Turns all lights off.

Increase Brightness—Applies more brightness.

Decrease Brightness—Applies less brightness.

Restore Brightness—Restores the original level of brightness.

Specular Lights—Adds a specular light component into the lighting calculation.

Materials Menu

Menu bar > Display > Materials
Keyboard > CTRL+M
Keyboard > CTRL+T

The Materials menu is used to apply settings to the scene's materials.

Interface

Use Default Material—Displays and hides the default material on all objects. This is helpful when reviewing files that have very light or dark materials.

Show Transparency—Displays and hides transparency in those materials that are transparent.

Show Textures—Displays and hides textures on objects in Solid render mode. The textures are displayed in the most realistic and detailed representation for the scene.

Copyright © Right Hemisphere 2006. All Rights Reserved.

Smoothing Menu

Menu bar > Display > Smoothing

The Smoothing menu is used to apply smoothing to selected objects in Solid or Transparent mode. This can be helpful in improving the 'look' of the objects.

These settings are global, that is, they change the smoothing for the entire scene. Individual objects can possess local smoothing settings (on page 271) that override these global settings.

Note: These commands may lessen the display performance. They also have no effect on wireframe views.

Interface

Use Existing Smoothing—Uses the smoothing normals from the current file.

0-**180—**Applies the selected smoothing angle degree.

Custom Angle—Opens the Custom Smooth Angle dialog and is used to apply a degree of smoothing angle.

No Smoothing—Disables all smoothing.

Create Menu

Menu bar > Create > Camera

Using the Create menu, you can create camera views (on page 72). These views are based on the current view of the camera. They are activated via the 3D Objects list or the Views menu (on page 317).

After creating a camera, either the camera object or the camera object and associated target node are displayed in the Scene Components panel depending on the type of camera created. You can modify these objects as you would modify other 3D objects. For example, selecting, hiding, and deleting, and attaching camera objects to groups.

After creating a target camera, are displayed in the Scene Components panel. You can modify camera objects as you would modify other 3D objects. For example, selecting, hiding, and deleting, and attaching camera objects to groups.

Interface

Camera (on page 74)—Creates a camera object of the scene using the current view's camera position.

Target Camera (on page 74)—Creates a camera object and associated target node, using the current view's camera position.

Editable Lights (on page 210)—Creates a light object in the Scene tree for each current scene light. In order to view the editable lights' effect on the scene, there must be no lights in the file. This is helpful if you want to save the lights with the file, or if you want to perform various functions on the lights such as grouping and animating, etc.

Render Menu

Menu bar > Render

The Render menu is used to perform a number of render functions including rendering the scene to a saved file, to the viewport or a separate window, as either a series of still images or video clip, and modifying the renderer properties.

Note that when rendering to the viewport with multiple viewports (on page 61) displayed, only the active viewport displays the rendered scene. You can choose to save the render at that point using the Save As (on page 201) command. However, if you resize the viewports, the render changes back to the 3D scene.

This functionality can also be accessed via the Raster Illustration tool (on page 134).

Interface

Render To File—Used to open the Save As dialog, render the current scene in a 2D format, and save the file to the location of your choice.

Auto Fly-Around—Saves animated files as either a series of still images or as a video clip. For example, as an AVI file or a number of JPG files.

Raytracer—Renders the scene using the Raytracer renderer (the best quality scene rendering), to the active viewport or a separate window depending on your selection in the Output tab (on page 215).

Software Z-Buffer—Renders the scene using the Software Z-buffer renderer (an average quality render), to the active viewport or a separate window depending on your selection in the Output tab (on page 215).

Renderer Properties (on page 215)—Opens the Properties dialog and is used to modify the currently selected renderer settings.

Render to File

Menu bar > Render menu > Render to File

The Render to File command is used to access the Render To dialog, from where you can render and save the current 3D file one of a number of 2D format. You can specify the save destination and name, and you can modify the renderer properties.

If the current 3D file is animated, animation options (on page 255) can also be set including saving the file as a single image or as a number of images.

Interface

File name—The name for the saved file.

Save as type—The format in which you want to save the file.

Save—Saves the file in the selected format with the current export settings.

Cancel—Closes the dialog. Any changes made to the settings are lost.

Help—Opens the relevant Help topic.

Settings (on page 56)—Used to establish export properties for the selected format. This command is only available if the selected format contains export properties.

Render (on page 215)—Displays the current renderer and settings, and is used to open the Properties dialog for the selected renderer and modify the settings.

Time Output—Used to set the animation range if the current file is animated.

- **Single image**—Generates a single image. That is, generates the current scene state as the saved file.

Copyright © Right Hemisphere 2006. All Rights Reserved.

- **All animation sequence [current number of frames]—**Saves the total number of frames as individual image files. That is, as a sequence of images. The number of files that are created equals 'seconds duration*FPS'. For example, if the animation is five seconds long and the FPS=30, 150 files are created.
- **Range—**Used to specify the first and last frame numbers to save that number of image files.
- **Custom frames**—Used to specify a custom number of frames to save as individual image files. That is, as a sequence of images. For example, if the animation is five seconds long and the FPS=30, usually 150 files would be created. However, if you enter 50 in the Frames field, only 50 files are created.
  - **Frames**—Determines the number of frames to save as individual image files.
  - **FPS**—The frames per second, that is, the number of frames of an animation sequence that are displayed every second. This setting reflects on the playback system as various film, computer, and TV playback systems differ.

Auto Fly-Around

Menu bar > Render menu > Auto Fly-around

The Auto Fly-Around command is used to access the Render Auto Fly-Around dialog, from where you can save animated files as either a series of still images or as a video clip to a destination of your choice. The images or video are created as if the camera is flying around the entire scene.

Procedure

To save a file as images or as a video:

1. Open the animated file that you want to save as still images or as a video.
2. Choose **Render > Auto Fly-Around** from the menu bar. The Save As dialog is displayed.
3. Select a save destination in the Save as field.
4. Enter a file name in the File name field.
5. Select a format type in the **Save as type** field.
6. Click the Settings button if you want to modify the file properties (on page 56), and make the selections you require.
7. Select the number of image files or video frames in the Number of frames field.
8. Select the vertical camera deviation in the Vertical deviation field.
9. Click **Preview** to preview the file if required.
10. Change the render output details using the Render description if required.
11. Click **Save**. The images or video are saved to the selected destination.

Interface

Save in—Used to select a destination into which to save the images or video.

File name—The name for the saved file.

Save as type—The format in which you want to save the file.

Save—Saves the file in the selected format with the current export settings.

Cancel—Closes the dialog. Any changes made to the settings are lost.

Help—Opens the relevant Help topic.

Round Trip—Used to select the number of frames and the vertical deviation, and you can preview the file.

- **Number of frames—**Determines the number of image files that are created, or the number of frames created in the video output.
- **Vertical deviation—**Determines the deviation of the camera on the vertical axis as it moves around the scene.
- **Preview—**Previews the file as it would be saved in video format.

Render (on page 215)—Displays the current renderer and settings, and is used to open the Properties dialog for the selected renderer and modify the settings.

Renderer Properties

Menu bar > Render menu > Renderer Properties
Menu bar > Illustration toolbar > Raster Illustration

Render settings can be modified and applied to the current file using the Properties dialog. This dialog includes tabs that are specific to the selected display renderer, and is opened via the Render menu or Raster Illustration tool (on page 134). You can choose to render the scene directly to the active viewport or save it to file. You can also choose to display the rendered scene in a separate window.

Note: Properties for the display renderer (on page 209) graphics cards installed on your computer properties for the can be set using the Render tab (on page 233) on the Options dialog.

Procedure

To render a scene:

1. Open a 2D or 3D file.
2. Do one of the following to display the Properties dialog for the selected renderer:
   - Click **Render > Renderer Properties** on the menu bar.
   - Click **Raster Illustration** on the Illustration toolbar.
3. Select the options you require.
4. Click **Render**. The model is rendered either in the viewport or in a separate window depending on your selection. If you chose to leave the statistics window open, the Rendering dialog displays the render statistics.

   Note: At any time you can click Cancel to close the dialog and cancel the render process. You can also click Help at any time to open the Help reference system.
5. If you selected to display the statistics, click **Close** to close the dialog after the rendering is complete.
6. Click **OK**. If you are using the Raster Illustration tool with the raster mode 'To File', the Save As dialog is displayed. Otherwise, the Properties dialog is closed.
7. If the Save As dialog is displayed, browse to the required save destination, enter a file name, select a file type and click **Save**. The file is saved.

   Note: You can use the Save As dialog to modify certain application options (on page 199) including resolution and time output.

Output Tab

The Output tab is common to all renderer types and is used to establish the renderer output settings.

Copyright © Right Hemisphere 2006. All Rights Reserved.

Interface

Resolution—Used to select the resolution to use when rendering the scene.

- **Window (width x height)—**Renders the scene to the default window resolution.
- **Specific resolution**—Used to select and apply a preset resolution setting.
- **Custom**—Used to select and apply the resolution settings you want.
  - **Width—**Determines the width of the rendered scene.
  - **Height—**Determines the height of the rendered scene.

Image Format—Used to select the pixel format (color depth) to use when rendering the scene. That is, the number of colors used to draw the scene. The format is in bits.

Note: This command only relates to the Raytracer renderer type as the Software Z-buffer renderer only supports 24bit RGB.

Close statistics after rendering—Closes the Rendering dialog after the render is complete.

Render in new window (on page 216)—Displays the rendered scene in a separate window.

Render—Renders all selected files to the selected format.

OK—Saves the settings and closes the dialog without rendering the scene.

Cancel—Closes the dialog. Any changes made to the settings are lost.

Help—Opens the relevant Help topic.

Render Window

When you render a scene, it is rendered either directly to the active viewport or saved to file depending on your settings in the Renderer properties dialog. You can also display the rendered scene in a separate window from the application, at the same time as rendering to the viewport or to file.

The render window includes a number of tools that can be used to save and copy the image, display information about the image, and modify the display within the window.

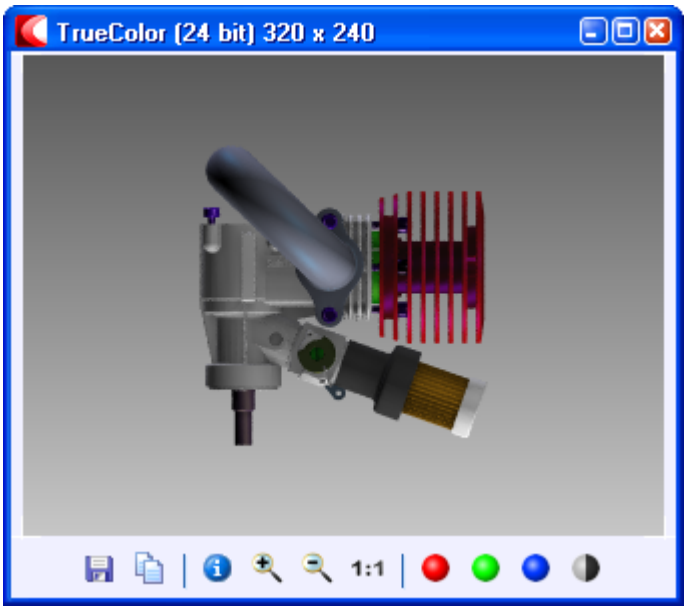

Example: Render to new window

Interface

 **Save As**—Opens the Saves As dialog and is used to save the image to the location, with the name, and in the format of your choice.

 **Copy Image**—Copies the image to the clipboard.

 **Information**—Displays information relating to the image.

 **Zoom In** (on page 65)—Magnifies the image.

 **Zoom Out** (on page 65)—Reduces the magnification of the image.



Standard View (on page 65)—Displays the image at its actual size in the dialog.

 **Red Channel** (on page 294)—Displays and hides the red color channel.

 **Green Channel** (on page 294)—Displays and hides the green color channel.

 **Blue Channel** (on page 294)—Displays and hides the blue color channel.

 **Alpha Channel** (on page 294)—Displays and hides the alpha color channel.

Raytracer Tab

The Raytracer tab becomes active when the Raytracer renderer is selected from the Render menu (on page 212). It is used to control a number of raytrace render options including antialiasing and shadows.

Interface

Antialiasing—Used to select the amount of antialiasing to apply. Antialiasing is the smoothing of the staircase effect that occurs when diagonal or curved lines, or borders are drawn on raster illustrations consisting of square or rectangular pixels. The higher the value, the smoother the rendered output.

Note: Higher values slow down the processing speed.

- **None**—Renders pixels without antialiasing.
- **Adaptive**—Uses adaptive antialiasing; antialiasing pixels that are different to any of the adjacent pixels. Edges are detected and smoothed by comparing edges of subdivided pixels. If the color difference is more than a set tolerance,the sub-pixels are again divided and so on, until no edge is detected.
- **2x2**—2x2 sub-pixels are calculated within each pixel, and then averaged.
- **3x3**—3x3 sub-pixels are calculated within each pixel, and then averaged.
- **4x4**—4x4 sub-pixels are calculated within each pixel, and then averaged.
- **5x5**—5x5 sub-pixels are calculated within each pixel, and then averaged.
- **6x6**—6x6 sub-pixels are calculated within each pixel, and then averaged.

Copyright © Right Hemisphere 2006. All Rights Reserved.

- **7x7**—7x7 sub-pixels are calculated within each pixel, and then averaged.
- **8x8**—8x8 sub-pixels are calculated within each pixel, and then averaged.

Filter texture maps—Filters the texture mapping. The texture value for each pixel is calculated using the average of the nearest texture elements to produce smoother results and works with both ray tracing and outline render.

Double-sided polygons—Renders both sides of all faces, that is, if you need to render the inside and the outside of objects, or if you've imported complex geometry in which the face normals are not properly unified. Selecting this option increases the rendering time.

Shadows—Applies hard shadows to the render.

Raytrace reflections—Applies true reflections using ray tracing from the camera view back to the light source. Models mapped with raytrace reflections act as mirrors.

Refraction—Applies refraction to the render.

Soft shadows—Applies soft shadows to the render.

Use multi-thread rendering—Uses all available processors to render the scene and increase the speed of rendering. This option is dependent on the number and power of your processors.

Render—Renders all selected files to the selected format.

OK—Saves the settings and closes the dialog without rendering the scene.

Cancel—Closes the dialog. Any changes made to the settings are lost.

Help—Opens the relevant Help topic.

Software Z-Buffer Tab

The Software Z-buffer tab becomes active when the Software Z-buffer renderer is selected from the Render menu (on page 212). It is used to control antialiasing and rendering of additional items.

Interface

Antialiasing—Used to select the amount of antialiasing to apply. Antialiasing is the smoothing of the staircase effect that occurs when diagonal or curved lines, or borders are drawn on raster illustrations consisting of square or rectangular pixels. The higher the value, the smoother the rendered output.

Note: Higher values slow down the processing speed.

- **None**—Applies no antialiasing to the pixels.
- **2x2**—2x2 sub-pixels are calculated within each pixel, and then averaged.
- **3x3**—3x3 sub-pixels are calculated within each pixel, and then averaged.
- **4x4**—4x4 sub-pixels are calculated within each pixel, and then averaged.

Render additional items—Renders all additional items such as the grid, axis etc.

Render—Renders all selected files to the selected format.

OK—Saves the settings and closes the dialog without rendering the scene.

Cancel—Closes the dialog. Any changes made to the settings are lost.

Help—Opens the relevant Help topic.

Favorites Menu

Menu bar > Favorites

The Favorites menu enables you to add frequently opened files to your favorites list for easy access. Files are added either to the default application folder or to folders that you create yourself. You can then rename them and open your favorite files quickly.

Favorites folders and files are deleted manually as described below. The method depends on version of Deep Exploration you are using. You can also create, rename, and move folders, and rename and move favorites files using the Favorites list (on page 242).

Procedures

To add a file to your favorites:

1. Click **Favorites > Add to Favorites** on the menu bar. The Add Favorite dialog is displayed.
2. Enter a name for the file and file path if you require in the Name field.
3. Do one of the following:
   - Select the folder to which you want to add the file.
   - If you want to add the file to a new folder, click **New Folder**, enter the name you require and then select it.
4. Click **OK**. The current file and file path are added to the folder.

To open a favorites file:

Click the file that you want to open in the Favorites menu.

To delete your favorites files:

1. Navigate to C:\Documents and Settings\[user name]\Application Data\Right Hemisphere\Deep Exploration.
2. Delete the favorites.dat file.

Interface

Add to Favorites—Adds the current file to your favorites list.

Examples—Displays your current favorites and is used to open the favorites folders and files.

Note: The Examples folder is the default favorites folder and can be renamed as you require.

Tools Menu

Menu bar > Tools

The Tools menu can be used in many ways including clearing the history list, updating thumbnail images and configuring certain graphics files settings.

Interface

Clear History (on page 244)—Deletes your history list of most recently browsed files.

Generate Thumbnails (on page 220)—Opens the Generate Thumbnails dialog and is used to create or update thumbnails in the thumbnails cache, for all files in the current folder.

Copyright © Right Hemisphere 2006. All Rights Reserved.

Update Thumbnail (on page 220)—Updates the thumbnail for the current model with any new settings you have applied. For example, render and viewport settings.

2D Tools (on page 221)—Used to control a number of image settings including modifying the image size and rotating the image.

3D Tools (on page 222)—Used to control a number of scene elements including removing duplicate materials and meshes.

Plugin Manager (on page 153)**—**Displays plugins, file formats and related information, and to resolve any file format conflicts.

Customize Layout (on page 207)—Opens the Customize Layout dialog and is used to control the display of the various user interface components.

Options (on page 224)**—**Opens the Deep Exploration options dialog and is used to establish various settings including color, 3D and 2D view, file, texture, slide show, and NURBS settings.

Generate Thumbnails Dialog

Menu bar > File > Generate Thumbnails
File list > Generate Thumbnails

Thumbnails are helpful for viewing and selecting files. When a thumbnail image is generated (created or updated) for a file, it is saved in the thumbnail cache. The next time the thumbnail is required, it is retrieved from the cache. You can choose from three thumbnail generation methods via the Options dialog: manual generation, whenever you open a file, or automatic generation (whenever a file is modified).

If you choose the manual generation method, the Generate Thumbnails command can be used to update the images for all files that are displayed in the File list when, and as you require.

After choosing the manual generation method and displaying the File list in Thumbnail view, a clock icon is displayed on the thumbnail images whenever you modify the files. Once you generate the thumbnails manually, this icon disappears and the updated image is displayed. Various thumbnail properties can be modified including the size, the cache memory size, and the generation method.

Here, we describe generating thumbnails manually, establishing generation settings, and deleting thumbnails.

Tip: You can update individual thumbnails by selecting the file you want to update, and then choosing Tools > Update Thumbnail from the menu bar or pressing CTRL+U.

Procedures

To generate thumbnails manually:

1. Navigate to the folder containing the files for which you want to generate thumbnails.
2. Do one of the following:
   - Choose **File > Generate Thumbnails** from the menu bar.
   - Click **Generate Thumbnails**  in the File list toolbar.
3. Select the camera from which to view each file's scene.
4. Select the 'Available scene camera' check box if you want to use the scene camera.
5. Select the 'Update existing' check box if you want to overwrite any existing thumbnails.
6. Click **OK**.

To delete thumbnails:

1. Navigate to C:\Documents and Settings\All Users\Application Data\Right Hemisphere\Deep Exploration.
2. Delete the pictures.dat file.

Interface

Camera View—Used to establish the settings with which thumbnail images are generated.

- **Camera—**Used to select a camera from which to view the scenes.
  - **Default view—**Sets the default camera position. That is, it uses the camera view from the original file.
  - **Active camera in current scene—**Sets the active camera position in the current scene.
- **Folder**—Displays the folder from which you selected to generate the thumbnails.
  - **Available scene camera—**Uses the camera properties from the current scene.

Process—Used to select whether to overwrite existing thumbnails and to view the point at which the process is currently running.

- **Update existing—**Overwrites any existing thumbnails.

OK—Creates new, or updates any existing thumbnail files.

Cancel—Cancels the process and closes the dialog. Any changes made to the settings are lost.

Help—Opens the relevant Help topic.

2D Tools Menu

Menu bar > Tools > 2D Tools

The 2D Tools menu is used to control a number of image settings including modifying the image size and rotating the image.

Procedures

To apply a normal map:

1. Open a 2D image (on page 42).
2. Choose **Tools > 2D Tools > Normal Map** from the menu bar.
3. Enter a bump scale number for the map and click **OK**.

The bump map is created from the image.

To modify the image size:

1. Open a 2D image.
2. Choose **Tools > 2D Tools > Image Size** from the menu bar.
3. Enter the width and height of the image in pixels or percent.
4. Select the 'Preserve aspect ratio' field to preserve the aspect ratio if required.
5. Click **OK**.

The image is displayed with the size settings.

Copyright © Right Hemisphere 2006. All Rights Reserved.

Interface

Flip Horizontal—Flips the image horizontally.

Flip Vertical—Flips the image vertically.

Grayscale—Applies grayscale the image.

Image size—Modifies the image size.

Invert Picture—Converts the color values to grayscale.

Normal Map—Applies a new surface vector (normal) to each pixel of the surface (polygon). This can be used to create a 'geometrically non-existent' but 'real looking' bumpy surface on a smooth polygon.

Rotate 180—Rotates the image 180 degrees.

Rotate 270—Rotates the image 270 degrees.

Rotate 90—Rotates the image 90 degrees.

3D Tools Menu

Menu bar > Tools > 3D Tools

The 3D Tools menu can be used to perform a number of functions including flying the camera to the selected objects and unifying normals.

Certain commands are only available if you have the CAD Edition of Deep Exploration (on page 18).

Interface

Benchmark (on page 107)—Measures the speed of your computer and graphics card and sends the information to a text file.

Convert to Double-Sided (on page 122)—Duplicates object polygons to display the same surface on the front and back faces of the objects.

Note: This function doubles the number of polygons. It may be more efficient to apply the double-sided attribute to an object (on page 272) or material (on page 282), or use CTRL+H to show the back-facing geometry.

Fly Camera to Selection—Zooms into the viewport to focus on the selected objects.

Invert Faces—Inverts all faces.

Join Equal Points—Joins all the points that have equal (coincident) x,y,z coordinates.

Remove Degenerate Triangles—Removes all degenerate triangles from the scene or from the selected objects depending on your selection. This is helpful if you want to optimize the model size and render speed.

Remove Duplicate Faces—Removes all duplicate faces from the scene or from the selected objects depending on your selection. This is helpful if you want to optimize the model size and render speed.

Remove Duplicate Materials—Removes all duplicate materials from the scene or from the selected objects depending on your selection. This is helpful if you want to optimize the model size and render speed.

Remove Duplicate Meshes—Removes all duplicate meshes from the scene or from the selected objects depending on your selection. This is helpful if you want to optimize the model size and render speed.

Remove Internal Parts—Opens the Remove Internal Parts Wizard and is used to hide or delete internal objects from the model. This function cannot be reversed.

Unify Normals (on page 110)—Opens the Unify Normals dialog and is used to align all surface normals in the same direction.

Benchmark Settings Dialog

Menu bar > Tools > 3D Tools > Benchmark
Right-click 3D viewport > Tools > Benchmark

Using the Benchmark Settings dialog, you can modify various settings including the number of seconds in which to test the file and the resolution with which to display the file as it is being benchmarked (on page 107).

Interface

Benchmark—Used to select a benchmark configuration file.

Duration—The number of seconds in which to test the file.

X-rotation—The angle of rotation about the X-axis.

Y-rotation—The angle of rotation about the Y-axis.

Start after—Determines the number of scene renders to ignore before the benchmark process begins. Benchmarking modifies the screen resolution and the size of the windows when the process first begins. These modifications are not immediate, therefore it takes time for the 3D scene measurements to be resolved. The duration of this 'settling down' period varies depending on a number of factors including the current Windows activities and the amount of available memory. As the duration is uncertain, this field can be used to ‘count’ the first few scene renders to ensure the correct information is gathered.

Samples—Determines the number of scene render samples that are used to calculate the rendering speed. The benchmark process runs for this number of frames and then, from the array of times that are collected, the minimum, maximum, and average frame rendering are calculated for every frame measurement. This is helpful if the frame rendering is very fast.

Full-screen—Used to display the file in Full-screen display mode when the information is compiled.

Window—Used to select the window resolution with which the file is displayed when the information is compiled.

Transparent background—Displays a transparent background during the benchmark process. Otherwise, an opaque background is displayed.

View (on page 73)—Used to select a preset camera view in which to display the scene.

Render method—Used to select the method used to render the scene.

Renderer (on page 209)—Used to select the renderer used to display the scene.

Default material—Applies the default material to the model. This is useful when reviewing files that have very light or dark materials.

Show textures—Displays and hides textures on objects in Solid render mode. The textures are displayed in the most realistic and detailed representation of scenes.

Show transparency—Displays and hides transparency in those materials that are transparent.

Start—Runs the benchmarking process.

Cancel—Cancels the process and closes the dialog. Any changes made to the settings are lost.

Help—Opens the relevant Help topic.

Copyright © Right Hemisphere 2006. All Rights Reserved.

Options Dialog

Menu bar > Tools > Options

Using the Options dialog, you can modify various settings including:

- Scene element colors.
- The 3D object drawing method.
- File associations.
- Texture search paths.
- Renderer properties.
- Default thumbnail size and cache settings.
- Slide show display time.
- The 2D image background color.
- CAD module search paths.
- NURBS processor and quality settings.

Procedure

To open the Options dialog:

Choose **Tools > Options** on the menu bar.

2D View Tab

Menu bar > Tools > Options > 2D View tab

The 2D View tab is used to determine how 2D images are displayed when you open a 2D graphics file. For example, you can select to display the background color of an image in green and the markers in red.

You can also select the size and color of the viewport grid (on page 81) that can be displayed in transparent images. This enhances the image placement making it easier to distinguish.

Procedure

To change the color of the image background or markers:

1. Click the relevant color rectangle.
2. Select the color you require.
3. Click **OK** twice.

Interface

Background color—Used to open the color selector and select a color for image backgrounds.

Crop mark color—Used to open the color selector and select a color for the image crop marks.

Image Size—Used to determine the display size of 2D images.

- **Standard Mode**—Used to determine the size of 2D images while in Standard display mode.
  - **Minimize to fit window**—Fits oversized images into the window.

  - **Maximize to fit window**—Fits undersized images into the window.
- **Full-Screen Mode**—Used to determine the size of 2D images while in Full-screen display mode.
  - **Minimize to fit window**—Fits oversized images into the window.
  - **Maximize to fit window**—Fits undersized images into the window.

Transparency Settings—Used to set the size and colors of the grid in images with a transparent background.

- **Grid size**—Used to set the size of the grid.
  - **None**—Displays the background with no grid.
  - **Small**—Displays the background with small grid.
  - **Medium**—Displays the background with medium grid.
  - **Large**—Displays the background with large grid.
- **Grid color**—Used to select the colors for the alternating grid squares.
  - **Light**—Colors the grid squares alternately white and light gray.
  - **Medium**—Colors the grid squares alternately medium and dark gray.
  - **Dark**—Colors the grid squares alternately medium and dark gray.
  - **Red**—Colors the grid squares alternately black and dark gray.
  - **Orange**—Colors the grid squares alternately white and light orange.
  - **Green**—Colors the grid squares alternately white and light green.
  - **Blue**—Colors the grid squares alternately white and light blue.
  - **Purple**—Colors the grid squares alternately white and light purple.
- **Color selectors**—Used to select custom colors for the alternating grid squares.

OK—Applies the settings and closes the dialog. Any changes made to the settings are saved.

Cancel—Closes the dialog. Any changes made to the settings are lost.

Help—Opens the relevant Help topic.

3D View Tab

Menu bar > Tools > Options > 3D View tab

The 3D View tab enables you to determine the drawing method of selected objects. You can also modify the auto-degradation settings and display ToolTips.

Note that objects that are not selected are rendered with the default settings.

Note: To apply any changes that you may have made on the Colors tab for the bounding box, vertices, wire frame, object axes, and surface normals, you must select the related check boxes on the 3D View tab.

Procedure

To modify the 3D view settings:

1. Make the selections you require.
2. Click **OK** and restart Deep Exploration.

Copyright © Right Hemisphere 2006. All Rights Reserved.

Interface

Selected Object Drawing Method—Used to determine the drawing method of selected objects.

- **Bounding box**—Renders selected objects with a bounding box.
- **Vertices**—Renders selected objects with vertices.
- **Wireframe**—Renders selected objects with a wire frame.
- **Current render method**—Renders selected objects with the current render method.
- **Show object axes**—Renders selected objects with object axes.
- **Surface normals**—Renders selected objects with surface normals.
- **Show tangents**—Renders selected objects with tangents.
- **Show skin weight**—Renders selected objects with skin weight.
- **Show motion path**—Renders selected objects with a motion path.
- **Show SubD control mesh**—Renders selected objects with a subdivision control mesh.
- **Highlight**—Renders the selected objects with a colored highlight (on page 228).

X-ray—Used to apply transparency to selected or unselected the objects.

- **None**—Displays all objects as opaque.
- **Selected objects**—Applies transparency to all selected objects. Objects that are not selected are displayed as opaque.
- **Unselected objects**—Applies transparency to all objects that are not selected. Selected objects are displayed as opaque.

Opacity—Determines the level of opacity used when the X-ray effect is applied. That is, how transparent the objects are in the scene.

Viewport Degradation—Used to simplify the viewport display when panning or rotating models. This ensures the display frame rate does not drop causing an irregular display.

- **Auto-degrade if frame takes more than [number] ms**—Switches to a less intensive rendering method for all the objects that have not yet been processed for a single frame if that frame takes more than the specified number of milliseconds to draw.
- **No geometry drawn if frame takes more than [number] sec**—Determines the maximum number of seconds to spend drawing a single frame. If a single frame takes more than this number of seconds to draw, nothing is drawn.
- **Selected objects**—Used to select the method for rendering selected objects if a single frame takes more than the specified number of milliseconds to draw.
  - **Default**—Renders selected objects in the 'Selected Object Drawing Method' as established above.
  - **Bounding box**—Renders selected objects as bounding boxes.
  - **Transparent bounding box**—Renders selected objects as transparent bounding boxes.
  - **Vertices**—Renders selected objects as vertices.
  - **Wireframe**—Renders selected objects as wireframes.
- **Unselected objects**—Used to select the method for rendering unselected objects if a single frame takes more than the specified number of milliseconds to draw.
  - **Bounding box**—Renders unselected objects as bounding boxes.
  - **Transparent bounding box**—Renders unselected objects as transparent bounding boxes.
  - **Vertices**—Renders unselected objects as vertices.
  - **Wireframe**—Renders unselected objects as wireframes.

Do not draw on extra group items—Prevents rendering of additional items for the selected objects if the render is too time-consuming. For example, motion path, and surface normals etc.

Display ToolTips—Renders selected objects with ToolTips.

OK—Applies the settings and closes the dialog. Any changes made to the settings are saved.

Cancel—Closes the dialog. Any changes made to the settings are lost.

Help—Opens the relevant Help topic.

CAD Modules Tab

Menu bar > Tools > Options > CAD Modules tab

The CAD Modules tab is used to define, and select the folders through which the application searches for associated CAD files when opening CAD files. For example, if a file has an related sub-assembly or parts file, the application searches through the user-defined paths to find those files.

Deep Exploration searches for these file through the directories in the following order:

1. The current directory of the file.
2. All folders relative to the current directory if a file has a relative path in the 3D file.
3. If an absolute path is contained within a file, the folder is defined within the absolute path.
4. Any user-defined folder paths and sub-folders listed in the CAD Modules tab.

Search paths are selected by default when added to the search paths list. You can clear the search path check boxes to prevent searching through the related paths.

You can also define search paths as recursive. This prompts the application to search through all sub-folders of the related search path when searching for texture maps.

Any changes you make using are applied the next time your computer is started.

Procedures

To add a user-defined search path:

1. Click **Add**.
2. Browse for the folder you require.
3. Click **OK** and restart the application.

The folder path and name is displayed in the search paths list.

To enable and disable searching through paths, do one of the following:

1. Do one of the following:
   - Select a search path check box to enable searching.
   - Clear a search path check box to disable searching.
2. Restart Deep Exploration.

To enable and disable searching through path sub-folders, do one of the following:

- Double-click a Sub-folders column cell to enable searching. The path is defined as as 'Recursive'.
- Double-click in a Sub-folders column cell that is defined as 'Recursive' to disable searching.

Copyright © Right Hemisphere 2006. All Rights Reserved.

To edit a user-defined search path:

1. Click the search path you want to edit in the search paths list.
2. Click **Edit** and browse for the required new folder.
3. Click **OK** and restart Deep Exploration.

To change the order of user-defined search paths:

1. Click the search path you want to move.
2. Click **Up** or **Down** to move the search path in the list.
3. Restart Deep Exploration.

To delete a user-defined search path:

1. Select the search path in the search paths list.
2. Click **Delete**.
3. Click **OK** and restart Deep Exploration.

Interface

Search paths—Used to view and select the search paths through which the application searches for texture maps.

- **Folder path and name**—Selects and clears the search paths.
- **Sub-folders**—Used to define the path as 'Recursive'. That is, to search through all sub-folders relating to the path.

Add—Used to add a search path.

Delete—Used to delete the selected search path.

Edit—Used to edit the selected search path.

Up—Moves the selected search path up the search paths list.

Down—Moves the selected search path down the search paths list.

OK—Applies the settings and closes the dialog. Any changes made to the settings are saved.

Cancel—Closes the dialog. Any changes made to the settings are lost.

Help—Opens the relevant Help topic.

Colors Tab

Menu bar > Tools > Options > Colors tab

The Colors tab is apply colors for the display of scene elements. For example, you can display the bounding box in green and vertices in red. Once modified, you can restore the default colors. The default material setting (on page 230) can also be modified.

The color settings for various elements including the scene bounding box, scene axes, and vertices, are displayed via the Display menu (on page 208) and Display toolbar (on page 298).

Note: Many of these color settings can also be modified via the Scene Properties dialog. They are unrelated to the Render modes (on page 68).

Changing the color of an element affects all file formats. Note that the color can only be changed for elements that have been enabled in the original images or model.

Please note that if you modify the bounding box, vertices, wire frame, object axes, and surface normals settings, you must select the related check boxes on the 3D View tab to apply your color settings.

Procedure

To apply a color to a scene element, do one of the following:

- Select an element in the Colors window, click **Edit**, select a color in the color selector, and then click **OK**.
- Double-click an element in the Colors window, select a color in the color selector, and then click **OK**.

Interface

Background top—Used to set the color of the upper half of the viewports' background gradient.

Background bottom—Used to set the color of the lower half of the viewports' background gradient.

Bones—Used to set the color of the model's bone structure.

Bone influence area—Used to set the color of the areas influenced by bones.

Bounding box of all objects—Used to set the color of the bounding box lines that surround all objects.

Bounding box of scene—Used to set the color of the bounding box lines that surround the scene.

Bounding box of selected objects—Used to set the color of the bounding box lines that surround selected objects.

Transparent bounding box—Used to set the color of the transparent bounding boxes that surround all objects.

Shadow—Used to set the color of the scene shadow.

Default material ambient color—Used to set the color of the general light that illuminates the entire scene. Ambient light has a uniform intensity and is uniformly diffuse. It has no discernible source and no discernible direction.

Default material diffuse color—Used to set the color of the diffuse light that is reflected in a scene. Because most scenes contain much more diffuse light than ambient light, diffuse reflection plays the largest part in determining the overall color. Additionally, because diffuse light is directional, the angle of incidence for diffuse light affects the overall intensity of the reflection. Diffuse reflection is at its greatest when the light strikes a vertex parallel to that vertex normal. As the angle of reflection increases, the effect of the diffuse reflection diminishes. The amount of light reflected is the cosine of the angle between the incoming light and the vertex normal.

Note: Files may display differently in the viewport if you change the diffuse color material.

Default material specular color—Used to set the color that creates highlights on objects making them appear shiny, that is, the reflection.

Default material emissive color—Used to set the color that makes a rendered object appear self-luminous. Emission affects an object's color and can, for example, make a dark material brighter and take on part of the emitted color.

Fog—Used to set the color of the fog when added to a scene to enhance depth awareness.

Faces in Line Illustration mode (on page 68)—Used to set the color of the faces in Line Illustration mode.

Selected faces—Used to set the color of selected faces.

Lines in Line Illustration mode (on page 68)—Used to set the color of the line when displaying a scene in Line Illustration and Hidden Wireframe modes.

Copyright © Right Hemisphere 2006. All Rights Reserved.

Lines in Shaded Illustration mode (on page 68)—Used to set the color of the lines in Shaded Illustration and Solid Outline modes.

Lines in Wireframe mode (on page 68)—Used to set the color of the lines in the various Wireframe modes.

Selection highlight (on page 225)—Used to set the color of the selected object's highlights.

Solid grid light cell (on page 81)—Used to set the color of the lighter cells of the solid grid, or ‘floor’ of the scene.

Solid grid dark cell (on page 81)—Used to set the color of the darker cells of the solid grid.

Transparent grid light cell (on page 81)—Used to set the color of the lighter cells of the transparent grid.

Transparent grid dark cell (on page 81)—Used to set the color of the darker cells of the transparent grid.

Subdivision control mesh—Used to set the color of the subdivision surface control mesh.

Surface normals—Used to set the color of surface normals.

Vertex-cross color—Used to set the color of the crosses representing an object's vertices.

Vertices in Vertices mode (on page 68)—Used to set the color of the vertices when displayed in Vertices mode.

Viewport labels (on page 61)—Used to set the color of the viewport labels.

Wire grid—Used to set the color of the lines of the wired grid, or 'floor'.

X Axis (on page 77)—Used to set the color of the x-axis of the selected object and the world coordinate system, or 'axes'.

Y Axis (on page 77)—Used to set the color of the y-axis of the selected object and the world coordinate system.

Z Axis (on page 77)—Used to set the color of the z-axis of the selected object and the world coordinate system.

Cross section outline—Used to set the color of the cross section plane's outline.

Cross section plane—Used to set the color of the cross section plane.

Reset—Restores the default settings.

Settings—Opens the Default Material dialog and is sued to modify the properties of the default material.

Edit—Used to open the color selector and select a color to apply to the selected element.

OK—Applies the settings and closes the dialog. Any changes made to the settings are saved.

Cancel—Closes the dialog. Any changes made to the settings are lost.

Help—Opens the relevant Help topic.

Default Material

Menu bar > Tools > Options > Colors tab > Settings

The properties for the default material that is used by Deep Exploration can be modified. Changing these properties affects all file formats. Some formats may contain materials. Plugins that handle 3D formats with materials may fill only several material properties (on page 282). Therefore, if you change the default material settings, your scene may display differently, and for this reason, we recommend noting the original material settings should you want to restore them at a later stage.

Procedures

To modify the default material:

1. Click the **Settings** button. The Default Material dialog is displayed.
2. Take a note of the original settings should you want to restore them at a later stage.
3. Make the selections you require.
4. Click **OK**.

To restore the most recently applied material settings:

Click the **Reset** button in the Default Material dialog.

Interface

Glossiness—Determines the level of the material's highlighting. As you increase the glossiness, the highlight gets smaller and the material appears shinier.

Specular level—Determines the intensity of the specular light. You can set the specular level to a very high value to achieve very strong, tight highlights. This value is also known as 'shininess strength'.

Opacity—Determines the opacity of the material. Opacity is the opposite of transparency. As you reduce the opacity value, the material becomes more transparent.

Raytrace reflection—Determines the level of the material's ability to reflect light.

OK—Closes the dialog and saves the settings.

Cancel—Closes the dialog. Any changes made to the settings are lost.

Help—Opens the relevant Help topic.

Reset—Restores the most recently applied material settings.

Files Tab

Menu bar > Tools > Options > Files tab

The Files tab displays file types, their formats and their associated applications. using it you can select the file types that you want loaded into Deep Exploration automatically when they are double-clicked in Windows Explorer. You can also specify:

- Which file types and folders to display in the File list.
- How Deep Exploration is displayed when it starts.
- Select other file type to display in the file associations list.
- Whether to load files independently of the application. This is helpful if you want to continue working in the application while files are loading.

Procedures

To select file types to load into the application automatically:

Do one of the following:

- Click the file type check box in the file associations list.
- Click the **Select All**, **Select 3D,** or **Select 2D** buttons.

Copyright © Right Hemisphere 2006. All Rights Reserved.

When you next double-click those file types in Windows Explorer, they are loaded into the application automatically.

To cancel a file type selection:

Do one of the following:

- Click the file type check box in the file associations list.
- Click the **Clear 3D** or **Clear 2D** buttons.

Interface

Select All—Selects all displayed files.

Select 3D—Selects all displayed 3D files.

Select 2D—Selects all displayed 2D files.

Clear 3D—Clears all 3D files from selection.

Clear 2D—Clears all 2D files from selection.

Visible files—Used to specify the file types you want to display in the Files list.

- **3D file types—**Displays only 3D file types.
- **2D and 3D files—**Displays 2D and 3D file types.
- **All files—**Displays all file types.

Other files—Lets you specify additional file types to be included on the file associations list. You can enter more than one file type by separating them with semicolons. For example: *.DAT;*.BAT.

Show folders—Displays all folders in the File list.

Show parent folder—Displays the parent folder at the top of the File list.

Load file in background—Loads files independently of the application so you can continue to use the application. Note that you can stop loading a file using the Stop button (on page 306).

OK—Applies the settings and closes the dialog. Any changes made to the settings are saved.

Cancel—Closes the dialog. Any changes made to the settings are lost.

Help—Opens the relevant Help topic.

NURBS Tab

Menu bar > Tools > Options > NURBS tab

The NURBS tab is used to control settings for NURBS objects; the industry standard tools for the representation and design of geometric shapes.

You can choose the processor and quality you require for trimming, and you can control the display of the selected NURBS objects. For example, you can display the object's control points grid and trimmed geometry.

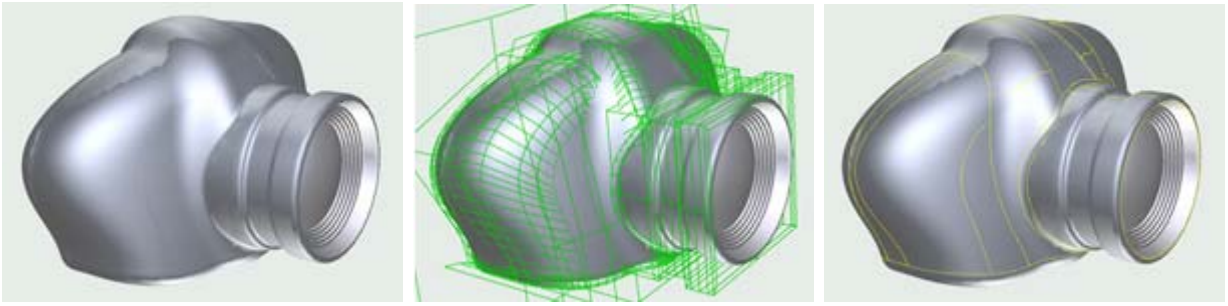

No grid or geometry displayed / Control points grid displayed / Trimmed geometry displayed

Note: If a model contains NURBS, the NURBS information can be displayed in the Object Properties dialog (on page 271) for the selected object.

Interface

Trimmed NURBS processor—Used to select the processor with which to trim the NURBS objects.

Trimmed NURBS quality—Determines the quality of the trimmed NURBS objects from lowest quality (left) to highest quality (right).

Selected NURBS—Used to control the display of selected NURBS objects in the scene.

- **Show control points grid**—Displays the object's control points grid in green.
- **Show trimmed geometry**—Displays any trimmed geometry of the object in yellow.

OK—Applies the settings and closes the dialog. Any changes made to the settings are saved.

Cancel—Closes the dialog. Any changes made to the settings are lost.

Help—Opens the relevant Help topic.

Render Tab

Menu bar > Tools > Options > Render tab

The Render tab is used to modify the display renderer properties (on page 209) for the graphics cards installed on your computer. This is helpful if you want to optimize file rendering.

The configuration options differ depending on the selected renderer. For example, if you select Software Z-buffer, you can select to use a second processor if one is installed on your computer, refine the static geometry, and render scenes in high quality.

Note: Properties for rendering scenes can be set using the Renderer Properties dialog (on page 215). If there are multiple cards installed on your computer, scenes are rendered using renderers in the order of DirectX, OpenGL, and then Software Z-buffer.

Procedure

To modify the renderer properties:

1. Make the selections you require in the Common Renderers Properties area.
2. Do one of the following:
   - Double-click the renderer that you want to configure.
   - Select the renderer and click **Configure**.
3. Change the properties as required and click **OK** twice.

Copyright © Right Hemisphere 2006. All Rights Reserved.

4. Restart Deep Exploration.

Interface

Common Renderer Properties—Used to modify the properties common to all renderers.

- **2-sided lighting for back-facing polygons**—Lights all back-facing polygons where possible.
- **Do not redraw scene on window expose**—Displays a copy of the scene from the information in the graphics card back buffer without regenerating the whole scene.
- **Incremental window update**—Uses the incremental window update when rendering; only the updated window region is repainted.
- **Z-buffer**—Selects the Z-buffer bit type with which to render files; 16, 24, or 32-bit.

Drivers—Lists all the available display renderers.

Configure—Opens the selected renderer's Properties dialog and is used to modify the renderer's properties.

OK—Applies the settings and closes the dialog. Any changes made to the settings are saved.

Cancel—Closes the dialog. Any changes made to the settings are lost.

Help—Opens the relevant Help topic.

MS DirectX Properties Dialog

Menu bar > Tools > Options > Render tab > MS DirectX 8.0 > Configure
Menu bar > Tools > Options > Render tab > MS DirectX 9.0 > Configure

The MS DirectX 8.0 or MS DirectX 9.0 Properties dialog is used to modify the properties for the selected graphics cards.

Interface

Driver—Displays, and is used to update the driver's properties.

- **Automatic configuration—**Configures the display renderer settings automatically.
- **Pure device**—Uses the pure device mode for rendering. This is a variant of the HAL device and supports hardware vertex processing only. It allows only a small subset of the device state to be queried by Deep Exploration. In addition, the pure device is available only on adapters that have a minimum level of capabilities.
- **HAL—**Uses the Direct3D HAL device mode for rendering. The Direct3D HAL is implemented by the chip manufacturer, board producer, or OEM. The HAL implements only device-dependent code and performs no emulation. If a function is not performed by the hardware, the HAL does not report it as a hardware capability. Additionally, the HAL does not validate parameters; Direct3D does this before the HAL is invoked.
- **Vertex processing**—Used to select the vertex processing mode for the MS DirectX 9.0 HAL device.
  - **Hardware—**Enables the device to perform hardware vertex processing. The performance of this type of processing is comparable to that of software vertex processing.
  - **Mixed—**Enables the device to perform both software and hardware vertex processing.
  - **Software—**Enables the device to perform software vertex processing. This provides a guaranteed set of vertex processing capabilities, including an unbounded number of lights and full support for programmable vertex shaders.
- **Store geometry in video memory**—Speeds up rendering if there is enough memory on the computer's graphic card by storing the geometry in the video memory via the index and vertex buffers.

- **Antialiasing**—Allows antialiasing to be applied to rendered scenes. Antialiasing is the smoothing of the staircase effect that occurs when diagonal or curved lines, or borders are drawn on raster illustrations consisting of square or rectangular pixels. The higher the value, the smoother the rendered output.
- **Enable custom shaders**—Allows shaders to be displayed in scenes.

Software Z-Buffer Properties Dialog

Menu bar > Tools > Options > Render tab > Software Z-Buffer > Configure

The Software Z-Buffer Properties dialog is used to modify the Software Z-buffer graphics card properties.

Interface

Use second processor—Attempts to increase rendering performance if a second processor is present on the computer. This can be up to 10-40% depending on the computer's hardware and the current model geometry.

Refine static geometry—Applies an antialiasing pass in the background if the scene has not been rotated or modified. Antialiasing is the smoothing of the staircase effect that occurs when diagonal or curved lines, or borders are drawn on raster illustrations consisting of square or rectangular pixels. It is used to improve the quality of the rendered output.

Render scene in high quality if number of triangle less than—Always renders the scene in full-screen antialiasing mode.

Note: This option may reduce rendering performance.

Textures Tab

Menu bar > Tools > Options > Textures tab

The Textures tab is used to define, and select the folders through which Deep Exploration searches for associated texture map images when opening 3D files. It is also used to define how the application loads graphics files.

Deep Exploration searches for the maps through the directories in the following order:

1. The current directory of the map.
2. All folders relative to the current directory if a map has a relative path in the 3D file.
3. If an absolute path is contained within a map, the folder is defined within the absolute path.
4. Any user-defined folder paths and sub-folders listed in the Textures tab.

Search paths are selected by default when added to the search paths list. You can clear the search path check boxes to prevent searching through the related paths.

You can also define search paths as recursive. This prompts the application to search through all sub-folders of the related search path when searching for texture maps.

Any changes you make are applied the next time your computer is started.

Procedures

To add a user-defined search path:

1. Click **Add**.
2. Browse for the folder you require.

Copyright © Right Hemisphere 2006. All Rights Reserved.

3. Click **OK** and restart Deep Exploration.

The folder path and name is displayed in the search paths list.

To enable and disable searching through paths, do one of the following:

1. Do one of the following:
   - Select a search path check box to enable searching.
   - Clear a search path check box to disable searching.
2. Restart Deep Exploration.

To enable and disable searching through path sub-folders, do one of the following:

- Double-click a Sub-folders column cell to enable searching. The path is defined as as 'Recursive'.
- Double-click in a Sub-folders column cell that is defined as 'Recursive' to disable searching.

To edit a user-defined search path:

1. Click the search path you want to edit in the search paths list.
2. Click **Edit** and browse for the required new folder.
3. Click **OK** and restart Deep Exploration.

To change the order of user-defined search paths:

1. Click the search path you want to move.
2. Click **Up** or **Down** to move the search path in the list.
3. Restart Deep Exploration.

To delete a user-defined search path:

1. Select the search path in the search paths list.
2. Click **Delete**.
3. Click **OK** and restart Deep Exploration.

Interface

Search paths—Used to view and select the search paths through which the application searches for texture maps.

- **Folder path and name**—Selects and clears the search paths.
- **Sub-folders**—Used to define the path as 'Recursive'. That is, to search through all sub-folders relating to the path.

Add—Used to add a search path.

Delete—Used to delete the selected search path.

Edit—Used to edit the selected search path.

Up—Moves the selected search path up the search paths list.

Down—Moves the selected search path down the search paths list.

Bilinear filtering—Removes the pixel artifacting. That is, stray pixels of a contrasting color seen when you view a texture map closely. The use of bilinear filtering reduces the display performance on some graphics cards. This option is available only for OpenGL graphics drivers.

Perspective correction—Applies a correction to the perspective of the 3D file. This option affects the rendering method of textured surfaces and although scene rendering is slower, the display of textured surfaces improves.

Use alpha channel in 32 bpp images—Applies 32 bits per pixel with alpha channel to files. Alpha channel can be used only by some file types, for example, Quake 3.

Reload texture on file change—Saves textures painted in a 2D graphics editor such as Adobe Photoshop, so they are automatically reloaded when switching back to the application.

Maximum texture resolution—Used to select the maximum resolution of textures while rendering in Solid render mode. The higher the setting, the better your textures appear, however, the time taken to refresh the scene may increase slightly. This option applies to OpenGL graphics drivers only.

OK—Applies the settings and closes the dialog. Any changes made to the settings are saved.

Cancel—Closes the dialog. Any changes made to the settings are lost.

Help—Opens the relevant Help topic.

Slide Show Tab

Menu bar > Tools > Options > Slide Show tab

Deep Exploration can display a series of 2D and 3D files as a slide show (on page 160). Using the Slide Show tab, the slides can be configured to show each slide for a specified number of seconds before the next one appears. You can also automate the scene rotation on both the X and Y axis.

Interface

Timed Slide Show—Use the slider to determine the number of seconds each slide is displayed.

Automate Scene Rotation—Used to set the camera rotation.

- **X direction**—Determines the direction of the camera rotation around the X axis
- **Y direction**—Determines the direction of the camera rotation around the Y axis.
- **Change rotation speed and direction**—Changes the camera rotation speed and direction.

OK—Applies the settings and closes the dialog. Any changes made to the settings are saved.

Cancel—Closes the dialog. Any changes made to the settings are lost.

Help—Opens the relevant Help topic.

Thumbnails Tab

Menu bar > Tools > Options > Thumbnails tab

The Thumbnails tab enables you to specify how your 3D and 2D files display as thumbnails (on page 220). You can choose the thumbnail size and background, the thumbnail cache size and in what way you want to generate thumbnails.

Further color and hide settings are available by clicking the More options button.

Procedure

To set the size of the thumbnail images, do one of the following:

- Click an option button, for example, 64 x 64 or 188 x 80. The size is displayed in the preview window and the number fields display the number of pixels.

Copyright © Right Hemisphere 2006. All Rights Reserved.

- Drag the vertical and horizontal sliders. The size is displayed in the preview window and the number fields display the number of pixels.
- Type the number of pixels in the number fields. The size is displayed in the preview window.

Interface

Thumbnail size—Use the option buttons, sliders or the number fields to set the size of the thumbnail images in pixels.

Thumbnails Cache—Used to set the size of the thumbnails cache.

- **Maximum thumbnail disk memory**—Use the slider to determine the cache size.

Thumbnails generation—Used to determine when thumbnails are generated.

- **Manual** (on page 220)—Thumbnails are generated when, and as you require using the Generate Thumbnails dialog.
- **On file load**—Generates thumbnails when the files are opened.
- **Automatic**—Generates thumbnails automatically whenever files are modified.

More Options—Used to display the Additional Thumbnails Properties dialog to select color and element display settings.

- **Background**—Used to set the background color of thumbnails.
  - **Current selection**—Uses the current scene background color.
  - **Window background**—Uses the window background color in your computer display properties.
  - **Custom color**—Used to select and apply to select a custom background color.
- **Hide all special elements**—Hides all special elements from display in the generated thumbnails. For example, the grid, axis, active object frame, and bounding box.

OK—Applies the settings and closes the dialog. Any changes made to the settings are saved.

Cancel—Closes the dialog. Any changes made to the settings are lost.

Help—Opens the relevant Help topic.

Help Menu

Menu bar > Help

The Help menu provides access to the application's Help reference system and other helpful information.

Interface

Deep Exploration Help—Displays the application's User Reference (online Help)

Keyboard Shortcuts (on page 355)—Displays the keyboard and mouse shortcuts.

Activate Deep Exploration (on page 19)—Used to activate the application after registration. This command disappears once the application is activated.

Activate Modules (on page 19)—Used to activate the application's modules after registration. This command disappears from the menu once the modules are activated.

Module Information—Links to the module resource Web page. You must have an Internet connection to view this page.

Support—Displays the Right Hemisphere Web site support page.

Internet Update (on page 34)—Opens the Internet Update Settings dialog and is used to establish the settings for updating files using Right Hemisphere's Cortex utility (http://www.righthemisphere.com/support/help/cortex/cortex_readme.htm).

Right Hemisphere—Displays the Right Hemisphere Web site home page.

About Deep Exploration—Displays a range of information about Deep Exploration including the copyright and version information.

Update Dialog

Menu bar > Help > Update

The Update dialog is used to modify the update settings for Deep Exploration, including stopping automatic updates and changing the update frequency. For example, you can set Deep Exploration to be updated by Cortex every month or every week as you require.

Interface

Automatically update Deep Exploration—Updates Deep Exploration automatically when the selected amount of time has passed.

Update—Used to select the frequency of the automatic updates.

OK—Closes the dialog and saves the settings.

Cancel—Closes the dialog. Any changes made to the settings are lost.

Copyright © Right Hemisphere 2006. All Rights Reserved.

Workspace

The workspace is used to display the currently opened file. It comprises one or more viewports that are used to view and modify files; it comprises one viewport if the current file is 2D and, if the current file is 3D, it comprises multiple viewports (on page 61) from where different views of the same scene can be displayed.

Note that the workspace is empty when Deep Exploration is first opened.

Viewports

The workspace includes viewports (on page 240) that are used to view and modify the current file. A viewport label is displayed in the top, left of the viewport showing the current view for each viewport, whether transparency and textures are 'on'.

Various right-click menus (on page 315) are available depending on the current file type and where the cursor is positioned when you click. Double-clicking objects in the viewport displays the Object Properties dialogs (on page 271).

Note: Only one viewport is available if the current file is a 2D image, whereas, four viewports are available for 3D files.

Various controls are displayed when file of certain types are opened, that allow you to manage and manipulate those files. For example, if you open a video file, video controls are displayed beneath the viewport that allow you to play and repeat the video.

Note: When you open an HDR file (on page 149), resolution controls are displayed in the Information bar, that allow you to adjust the parts of the image.

Explorer Bar

Menu bar > View > Explorer Bar

The Explorer bar comprises the Folders and Search panels, and the History and Favorites lists,and the Gateway panel if the Gateway Module (on page **Error! Bookmark not defined.**) is installed on your computer. It is used to show and hide these components and the File list tabs.

Note that Deep Exploration's menu bar (on page 199) commands available differ depending on the Explorer bar display. For example, if you have an animated 3D file open and the Folders panel displayed, all commands are active on the File menu. However, if the same file is open and the Favorites or History list is displayed, Search Active Folder and Go To Folder commands are inactive.

Folders Panel

Menu bar > View > Explorer Bar > Folders
Standard toolbar > Folders

The Folders panel is used to navigate and manage your folders from with a tree-view hierarchy. Every folder provides easy access to common folder management tasks similar to the functionality in most Windows applications. For example, they can easily be dragged to new locations, copied, moved, renamed, closed, explored, and made available offline using the right-click menus (on page 325).

Files and folders can be dragged between the Folders panel and the File list to move them to other folders.

When you display the panel, it is displayed to the left of the viewport by default, and if the Favorites list (on page 242), History list (on page 244), Search panel (on page 245), or Gateway panel (on page 247) is open, it is closed automatically.

The panel also includes a toolbar that can be used to create, rename and delete folders, and to search for files or folders. Note that you can also create folders from within the File list.



Folder panel toolbar

You can double-click folders to expand and collapse them, or you can use the plus and minus buttons .

Procedures

To toggle the display of the Folders panel, do one of the following:

- Choose **View > Explorer Bar > Folders** on the menu bar.
- Click **Folders**  on the Standard toolbar.
- Click the currently displayed panel or list menu bar, and then click **Folders**.

To close the Folders panel:

- Click **Close Folders**  on the Folders panel.

Copyright © Right Hemisphere 2006. All Rights Reserved.

To create a folder:

1. Select the drive folder in which you want to create the folder.
2. Click **Create Folder**  on the Folders panel toolbar.
3. Enter a name for the folder and press ENTER.

To rename a folder:

1. Select the folder that you want to rename.
2. Click **Rename Folder**  on the Folders panel toolbar.
3. Enter a name for the folder and press ENTER.

To search through a folder:

1. Select the drive or folder through which you want to search.
2. Click **Search Active Folder**  on the Folders panel toolbar.
3. Type the name in the File mask field and click **Search**.

Any files that match the search criteria are displayed in a Search tab (on page 314).

To delete a folder, do one of the following:

- Select the folder that you want to delete and click **Delete Folder**  on the Folders panel toolbar.
- Select the folder that you want to delete and press DELETE on your keyboard.
- Right-click the folder that you want to delete in the Folders panel or File list and click **Delete**.

The file or folder and all the folder contents are deleted.

Interface

 **Create Folder**—Creates a new folder within the selected drive or folder.

 **Rename Folder**—Used to rename the selected folder.

 **Search Active Folder**—Opens the Search Active Folder and is used to search through the folder and all its sub-folders for files.

 **Delete Folder**—Deletes the selected folder.

Favorites List

Menu bar > View > Explorer Bar > Favorites
Standard toolbar > Favorites

The Favorites list is used to view and open your most frequently-used files. It displays a list of the files saved to your favorites in a folder hierarchy. You can create, move, rename and delete favorites folders, and rename, move and delete favorites files.

When you display the panel, it is displayed to the left of the viewport by default, and if the Folders panel (on page 241), History list (on page 244), Search panel (on page 245), or Gateway panel (on page 247) is open, it is closed automatically.

The panel also includes a toolbar that can be used to create, rename and delete folders, and to move files between folders.



Favorites list toolbar

All favorites folders and files are saved to, and deleted from the Favorites list using the Favorites menu.

Procedures

To toggle the display of the Favorites **list, do one of the following:**

- Choose **View > Explorer Bar > Favorites** on the menu bar.
- Click **Favorites**  on the Standard toolbar.
- Click the currently displayed panel or list menu bar, and then click **Favorites**.

To close the Favorites **list:**

- Click **Close Favorites**  on the Favorites list.

To create a favorites folder:

1. Select the folder in which you want to create the folder.
2. Click **Create Folder**  on the Favorites panel toolbar.
3. Enter a name for the folder and press ENTER.

To rename a favorites folder:

1. Select the folder that you want to rename.
2. Click **Rename Folder**  on the Favorites panel toolbar.
3. Enter a name for the folder and press ENTER.

To move a favorites file or folder:

1. Select the file or folder that you want to move.
2. Click **Move to Folder**  on the Favorites panel toolbar.
3. Select the folder under which you want to move the folder or file and click **OK**.

Copyright © Right Hemisphere 2006. All Rights Reserved.

To delete a favorites file or folder:

1. Select the file or folder that you want to delete.
2. Do one of the following:
   - Click **Delete Folder**  on the Favorites panel toolbar.
   - Press DELETE on your keyboard.

The file or folder and all the folder contents are deleted.

Interface

 **Create Folder**—Create a new folder within the selected favorite folder.

 **Rename File/Folder**—Used to rename the selected favorite file or folder.

 **Move to Folder**—Opens the Browse for Folder dialog and is used to move the selected folder to another favorite folder.

 **Delete File/Folder**—Deletes the selected favorite file or folder. Note that favorites can also be deleted pressing DELETE on your keyboard.

History List

Menu bar > View > Explorer Bar > History
Standard toolbar > History

The History list is used to view and open the most recently browsed 3D files. You can display the list in either a detailed or thumbnail view.

When you display the panel, it is displayed to the left of the viewport by default, and if the Folders panel (on page 241), Favorites list (on page 242), Search panel (on page 245), or Gateway panel (on page 247) is open, it is closed automatically.

The panel also includes a toolbar that can be used to display the list in either a thumbnail or detailed view.



History list toolbar

Procedures

To toggle the display of the History list, do one of the following:

- Choose **View > Explorer Bar > History** on the menu bar.
- Click **History**  on the Standard toolbar.
- Click the currently displayed panel or list menu bar, and then click **History**.

To close the History list, with the list displayed:

- Click **Close History**  on the History list.

To switch between the views, do one of the following:

- Click **Thumbnails**  on the History list toolbar to display the list in a thumbnail view.
- Click **Details**  on the History list toolbar to display the list in a detailed view.

To delete the History list:

1. Navigate to C:\Documents and Settings\[user name]\Application Data\Right Hemisphere\Deep Exploration.
2. Delete the history.dat file.

Interface

 **Thumbnails**—Displays a thumbnail view with the name of each file.

 **Details**—Displays detailed information for each file.

Search Panel

Menu bar > View > Explorer Bar > Search
Standard toolbar > Search

The Search panel is used to search for files (on page 50) through local drives, network drives, and the Web.

Each time you perform a search, a Search tab is displayed in the File list that shows all the files that match the search criteria. These tabs can be used to refine your search further, and they can be closed as required.

When you display the panel, it is displayed to the left of the viewport by default, and if the Folders panel (on page 241), Favorites list (on page 242), History list (on page 244), or Gateway panel (on page 247) is open, it is closed automatically.

The panel also includes a toolbar that can be used to perform new searches and open the Help search topic.



Search panel toolbar

The panel's contents differ depending on the type of search you perform: a local file search or a Web search.

A right-click menu is available, depending on where your cursor is located in the panel, from where you can undo, cut, copy, paste, and delete the bar's contents similar to the functionality in most Windows applications.

Copyright © Right Hemisphere 2006. All Rights Reserved.

Procedures

To toggle the display of the Search panel, do one of the following:

- Choose **View > Explorer Bar >** Search on the menu bar.
- Click Search  on the Standard toolbar.
- Click the currently displayed panel or list menu bar, and then click Search.

To close the Search panel:

- Click **Close** Search  on the Search panel.

Interface

 **New Search** (on page 50)—Opens the Search Active Folder and is used to search through the folder and all its sub-folders for files.

 **Help**—Opens the relevant Help topic.

Local File Search Panel

Search panel > Local file search

The Local File Search panel is used to search for files (on page 50) through local and network drives.

Interface

File name—The name of the files for which you want to search.

File type—Used to select the format of the files for which you want to search.

Look in—Used to select the drive through which you want to search for the files.

Search sub-folders—Used to search through the selected drive and all its sub-folders only.

Search—Performs the search through the selected drive.

Stop—Stops the search process.

Local file search—Displays the Local File Search panel and is used to search for files through a local or network drive.

Web search—Displays the Web panel and is used to search for 2D and 3D files through the Web.

Web Search Panel

Search panel > Web search

The Web Search panel is used to search for 2D and 3D files (on page 50) through the Web.

Interface

File name—The name of the files for which you want to search.

Search For—Used to select the type of file for which you want to search.

- **Models**—Searches for 3D scene files.
- **Textures**—Searches for 2D image files.

Search Settings (on page 247)—Opens the Web Search Settings dialog and is used to establish settings for searching through the Web.

Open download folder (on page 51)—Opens the destination folder of any downloaded files.

Search—Performs the search through the Web.

Stop—Stops the search process.

Local file search—Displays the Local File Search panel and is used to search for files through a local or network drive.

Web search—Displays the Web panel and is used to search for 2D and 3D files through the Web.

Web Search Settings Dialog

Search panel > Web search > Search Settings

The Web Search Settings dialog is used to establish the settings for searching through the Web.

Interface

2D Files—Used to add the 2D extensions for which Deep Exploration searches for those files types. For example, jpg, gif.

- **Add extension**—Used to add 2D extensions to the extension list.
- **Add**—Adds the extension entered in the 'Add extension' field to the extension list.
- **Extensions**—The list of 2D extensions for which Deep Exploration searches.
- **Remove**—Removes the selected extension from the extension list.

3D Files—Used to add 3D extensions for which Deep Exploration searches for those files types. For example, rh, 3ds.

- **Add extension**—Used to add 3D extensions to the extension list.
- **Add**—Adds the extension entered in the 'Add extension' field to the extension list.
- **Extensions**—The list of 3D extensions for which Deep Exploration searches.
- **Remove**—Removes the selected extension from the extension list.

Download folder—The folder into which located files are downloaded.

Browse—Used to browse for and select the folder in which the located files are downloaded.

Number of search threads—The number of concurrent searches Deep Exploration performs.

OK—Closes the dialog and saves the settings.

Cancel—Closes the dialog. Any changes made to the settings are lost.

Copyright © Right Hemisphere 2006. All Rights Reserved.

Gateway Panel

Menu bar > View > Explorer Bar > Gateway

The Gateway panel becomes available when you install the Gateway Module (on page **Error! Bookmark not defined.**). It comprises the Gateway tree and various tabs from where you can search for, download, view, and update assets.

Note: Once you have logged in to a server, any projects and categories that were created in Deep Server Web are displayed in the Gateway panel. Please see your Systems Administrator for further information for information on Deep Server Web.

When you display the panel, it is displayed to the left of the viewport by default, and if the Folders panel (on page 241), Favorites list (on page 242), History list (on page 244), or Search panel (on page 245) is open, it is closed automatically. However, you are not logged off any servers to which you are logged in.

Every time a Gateway search is performed, a Search tab is displayed in the File list (on page 310) containing files that match the search criteria. Located assets are then uploaded to Deep Server database. The tree displays a hierarchy view of all uploaded assets, derivatives, and associated files.

Whenever you select an item in the tree that has been downloaded (on page 180), it is displayed in the Deep Exploration viewport. All the derivatives, associated files, and subgroups that correspond to that item are displayed in the Gateway tabs (on page 313) within the File list. Whenever you select an item in those tabs, it is also displayed in the viewport.

Right-click menus (on page 326) are available from where you can add and remove servers, upload and manage assets, assemblies, and derivatives.

Procedures

To toggle the display of the Gateway panel, do one of the following:

- Choose **View > Explorer Bar >** Gateway on the menu bar.
- Click the currently displayed panel or list menu bar, and then click Gateway .

To close the Gateway panel:

- Click **Close** Panel  on the Gateway panel.

Interface

Assemblies tab (on page 249)—Displays the Gateway tree with all uploaded assembly and derivative files within project and category folders, and used to perform a number of procedures including viewing, uploading, and downloading assemblies and derivatives.

Assets tab (on page 250)—Displays the Gateway tree with all uploaded assets files within project and category folders, and used to perform a number of procedures including viewing, uploading, and downloading single assets.

Search tab (on page 182)—Used to search for assets in the Deep Server database.

Server—Displays a list of servers to which you have previously connected.

Login—Displays when you are disconnected and is used to log in to a selected server.

Gateway Tree

Menu bar > View > Explorer Bar > Gateway

The Gateway tree is used to perform most of the Gateway Module (on page **Error! Bookmark not defined.**) functions from within a tree-view hierarchy. Every tree node is indicated by a separate icon.

Right-clicking a node displays a right-click menu with which you can use to perform a variety of functions including adding and removing servers, uploading assets, and downloading single assets, assemblies, and derivatives.

Note that folders displayed in the panels can be a project added to Gateway (on page 178), a category defined in Gateway (on page 178), or a project or category created in Deep Server Web. Please see your Systems Administrator for further information for information on Deep Server Web.

Interface

 **Server node** (on page 176)—The node of the added servers.

 **Logged in** (on page 176)—Indicates that you are logged into the selected server.

 **Logged out** (on page 176)—Indicates that you are logged out of the selected server.

 **Assembly node** (on page 249)—The node of the uploaded assembly or sub-assembly.

 **Single asset node** (on page 250)—The node of the uploaded asset.

 **Part node** (on page 249)—The node of the uploaded part.

 **Download button** (on page 180)—Indicates that the asset or derivative has not been downloaded.

 **Downloaded button** (on page 180)—Indicates that the asset or derivative has been downloaded into the temporary files cache (on page 327).

Assemblies Tab

Menu bar > View > Explorer Bar > Gateway > Assemblies

The Assemblies tab comprises the Gateway tree (on page 249) and a number of context-sensitive right-click menus (on page 326). It is used to perform a number of procedures including viewing, uploading, and downloading assemblies and derivatives, removing derivatives from the temporary files folder, and deleting assemblies from the server.

The right-click menu commands depend on the location of your cursor within the panel. For example, if you right-click a server node, you can log out of the selected server and upload assemblies.

Copyright © Right Hemisphere 2006. All Rights Reserved.

Projects and category folders, and uploaded assemblies (on page 179) are displayed under each server node in the Gateway tree, according to the assembly information stored in the Deep Server database. Sub-assemblies and derivatives are displayed beneath those items according to their individual hierarchy. When you click an item in the panel, all derivatives, associated files, and subgroups are displayed in the Gateway tabs (on page 313).

Note: Folders displayed in the Assemblies tab can be a project added to Gateway (on page 178), a category defined in Gateway (on page 178), or a project or category created in Deep Server Web. Please see your Systems Administrator for further information for information on Deep Server Web.

Assemblies and parts are denoted by the assembly  and part  icons in the Assemblies tab.

Assets Tab

Menu bar > View > Explorer Bar > Gateway > Assets

The Assets tab comprises the Gateway tree (on page 249) and a number of context-sensitive right-click menus (on page 326). It is used to perform a number of procedures including viewing, uploading, and downloading single assets.

The right-click menu commands depend on the location of your cursor within the panel. For example, if you right-click an item node, you can download subgroup files that correspond to that item.

Projects and category folders, and uploaded assets (on page 178) are displayed under each server node in the Gateway tree, according to the asset information stored in the Deep Server database. When you click an item in the panel, all derivatives, associated files, and subgroups are displayed in the Gateway tabs (on page 313).

Note: Folders displayed in the Assets tab can be a project added to Gateway (on page 178), a category defined in Gateway (on page 178), or a project or category created in Deep Server Web. Please see your Systems Administrator for further information for information on Deep Server Web.

Single assets are denoted by the single asset  icon in the Assets tab.

Search Tab

Menu bar > View > Explorer Bar > Gateway > Search

The Search tab is used to search for assets (on page 182) through the Deep Server database.

Each time you perform a search, a Search tab (on page 314) is displayed in the File list that shows all the files that match the search criteria. These tabs can be used to refine your search further, and they can be closed as required.

The panel's contents differ depending on the type of search you perform: a local file search or a Web search.

A right-click menu is available, depending on where your cursor is located in the panel, from where you can undo, cut, copy, paste, and delete the bar's contents similar to the functionality in most Windows applications.

Interface

Server (on page 176)—Used to select the server through which to search for assets.

Basic Search tab (on page 251)—Used to search for assets based on one or more keywords.

Advanced Search tab (on page 251)—Used to search for assets by specifying additional search terms to narrow the search.

Basic Search Panel

Gateway panel > Search tab > Basic Search

The Basic Search tab is used to search for assets (on page 182) based on one or more keywords. The search is not case sensitive.

Interface

Keyword—Search criteria that is associated with the asset for which you are searching.

Search—Searches for assets based on the search criteria.

Reset—Clears all the criteria from the search fields.

Advanced Search Panel

Gateway panel > Search tab > Advanced Search

The Advanced Search page can be used to search for assets (on page 182) by specifying additional search terms to narrow the search. The terms can include asset properties such as names, category to which assets belong, and metadata.

Interface

Asset name—Searches for assets by asset name. For assembly and part assets, this name comes from the related XML file. For single assets, this is the file name without the file extension. For example, for a single asset of which the file name is 'audi.3ds', the asset name is 'audi'.

Category—Searches for assets by category.

Date uploaded—Searches for assets that were uploaded within the specified range.

- **Start**—The first date from which to search for assets.
- **End**—The last date to which to search for assets.

File name—Searches for assets by the asset's original file name.

File size—Searches for assets that fit within the specified range.

- **Min**—The minimum size of the assets on which to search.
- **Max**—The maximum size of the assets on which to search.

Instance name—Searches for assets by instances of assets within the database.

Metadata—Searches for assets by metadata.

Project—Searches for assets by the project in which asset has been grouped or assigned.

Uploaded by—Searches for assets by the name of the person who performed the upload.

Copyright © Right Hemisphere 2006. All Rights Reserved.

Search—Searches for assets based on the search criteria.

Reset—Clears all the criteria from the search fields.

Controls

Menu bar > View > Controls and Toolbars
Right-click menu bar
Customize Layout dialog > Controls tab

Controls are tools that give you added functionality for managing and modifying files. For example, the Animation controls allow you to play and pause animations, the Level of Detail slider can be used to view the model at any available LOD, and the Object Position controls are used to move objects within the model along their individual axes.

You can set each control to display automatically (on page 207) if a file includes functionality that relates to that control. For example, if a file includes animation and the Animation Timeline control is set to automatic, the control will display when the file is opened.

Controls can be resized, moved, floated, docked, and closed (on page 345) similar to the functionality in most Windows applications. They are displayed as docked by default and have a Windows-type interface. Individual controls can be shown or hidden.

Interface

Address Bar (on page 253)—Used to navigate to and access drives and folders.

Animation Controls (on page 254)—Displays and hides the Animation controls. They are located to the left of the Status bar by default.

Animation Timeline (on page 257)—Displays and hides the animation timeline.

Audio Controls (on page 260)—Automatically displayed when an audio file is opened and is used to control the sound.

Display Settings Panel (on page 260)—Opens the Display Settings panel and is used to select and save display settings within a theme, or to select an existing theme to apply to the display.

Information Bar (on page 262)—Used to view various scene, file, object, and material information relating to the current scene.

Level of Detail Controls (on page 263)—Used to view models at any available LOD.

Model Views Panel (on page 264)—Displays and hides the Model Views panel.

Object Position Controls (on page 266)—Used to transform individual and grouped objects along their individual axes interactively.

Scene Components Panel (on page 266)—Displays and hides the Scene Components panel.

Step Views Panel (on page 290)—Displays and hides the Steps panel.

Video Controls (on page 293)—Automatically displayed when an video file is opened and is used to control the video.

Copyright © Right Hemisphere 2006. All Rights Reserved.

Address Bar

Menu bar > View > Controls and Toolbars > Address Bar
Right-click menu bar > Address Bar
Customize Layout dialog > Controls tab > Select Address Bar > OK

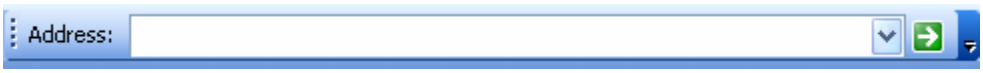

The Address Bar is used to navigate and provide easy access to folders and drives. It automatically updates as when navigating through the Folders panel (on page 241) to display the current drive or folder.

The auto-complete feature saves any previous address entries you've made. As you type information in the Address field, all possible matches are displayed in a suggestion list. You can use this list to select from addresses you have visited previously.

The bar can be resized, moved, floated, docked, and closed (on page 345). A right-click menu is available from where you can undo, cut, copy, paste, and delete the bar's contents similar to the functionality in most Windows applications.

Procedures

To go to a new address:

Type the address in the Address bar and click the **Go To**  button.

To go to a previous address, do one of the following:

- Start typing the address in the Address bar and then click the address that you want in the suggestion list.
- Click the Address bar down arrow and click the address you want in the suggestion list.

Interface

Address—The path or folder or drive to where you want to move.

 **Go To**—Navigates to the address entered in the Address field.

Animation Controls

Menu bar > View > Controls and Toolbars > Animation Controls
Right-click menu bar > Animation Controls
Customize Layout dialog > Controls tab > Select Animation Controls > OK



The Animation toolbar is used to control scene animation (on page 101). It includes a time/frame slider and animation options, and is only available when a scene is animated.

The toolbar can be resized, moved, floated, docked, and closed (on page 345) similar to the functionality in most Windows applications.

Interface

Time/frame slider—Used to show the real-time status of the animation in progress, the current frame number, the total number of frames, and manually advance through the animation.

Note: You can also double-click the slider to display the Animation Options dialog.

 **Reverse**—Plays the animation in reverse.

 **Stop**—Stops the animation from playing.

 **Forward**—Plays the animation forward.

Animation controls menu—Used to modify animation settings, the type of play (simple, cyclic, ping-pong), and to select an animation sequence, if any.

- **Simple**—Sets the animation to play once from beginning to end.
- **Cyclic**—Sets the animation to play continuously from beginning to end.
- **Ping-pong**—Sets the animation to play continuously back and forth from beginning to end, and from end to beginning.
- **Options** (on page 255)—Opens the Animation Options dialog and is used to create animation sequences for the scene, and modify the animation settings.
- **Sequences**—Used to view a specific sequence in the animation. This command is only available if more than one sequence has been created for the animation.
  - **Default**—Moves to the default sequence.
  - **[sequence name]**—Moves to the selected sequence.
- **Customize Layout** (on page 207)**—**Opens the Customize Layout dialog and is used to control the display of the various user interface components.
- **Auto Show/Hide**

Animation Options Dialog

Animation Controls > Down arrow > Options
Animation Controls > Double-click frame slider

Using the Animation Options dialog, you can create multiple animation sequences for the scene, and control various animation settings including frame rate, duration, and time display.

The Sequence window displays a list of the animation sequences (on page 102), including the default sequence. That is, the current scene animation. You can add and edit sequences including the default sequence. However, the default sequence cannot be deleted.

Note: If a scene has an animated explosion created using CADTools (on page 109), an Explode sequence is displayed in the sequence list. This sequence can be removed by removing the animated explosion (on page 122).

This dialog is also used to duplicate selected sequences (on page 322) via the Animation timeline (on page 257). The options displayed differ depending on whether you are creating or duplicating a sequence.

Copyright © Right Hemisphere 2006. All Rights Reserved.

Procedure

To open the Animation Options dialog, do one of the following:

- Click the down arrow on the Animation toolbar and then click **Options**.
- Double-click the frame slider on the Animation toolbar.

Interface

Sequence window—Displays the current scene's animation sequence.

- **Start**—The number of the frame where the animation begins.
- **End**—The number of the frame where the animation ends.
- **FPS**—The frames per second, that is, the number of frames of an animation sequence that are displayed every second. This setting reflects on the playback system as various film, computer, and TV playback systems differ.

  Note: The higher the frame rate, the more processing power and system bandwidth are required.

Add—Used to add a sequence.

Delete—Used to delete the selected sequence.

Edit (on page 257)—Used to edit the selected sequence.

Playback Control—Used to select the percentage playback speed and to skip frames.

- **Speed**—Determines the percentage playback speed, that is, the speed the step plays as a percentage of real-time speed. For example, if the step is 10 seconds long and you enter 100%, it will take 10 seconds to play. However, if you enter 50%, the step will take 20 seconds to play.
- **Skip frames**—Skips frames if the computer cannot keep pace with the current frame rate (FPS). This causes certain frames to be missed when playing the animation. Otherwise, all frames are displayed during playback even if they are not displayed at the current frame rate.

Continuous time—Calculates the animation between frames (frame interpolation) using the real time value. For example, 1,250 seconds. Otherwise, the closest key time value is used. For example, 1 second, even if the animation is in between 1 second and 2 second frames.

Snap to frames—Moves from frame to frame, without frame interpolation, when playing the animation.

Time Display—Used to select how to display the time in the frame slider. This setting operates in relation to the FPS. For example, if the time slider is at frame 45, and the FPS is set to 30, the time slider displays the following for each of the different time display options: Frames: 45, Seconds: 1.5, MM:SS: 0:1.50 and SMPTE: 0:1:15.

- **Frames**—Displays the time in frames.
- **Seconds**—Displays the time in seconds.
- **MM:SS**—Displays the time in minutes and seconds.
- **SMPTE**—Displays the time in the Society of Motion Picture Technical Engineers standard. This standard measures video and television production time.

OK—Closes the dialog and saves the settings.

Cancel—Closes the dialog. Any changes made to the settings are lost.

Help—Opens the relevant Help topic.

Edit Sequence Dialog

Animation Options dialog > Edit

The Animation Options dialog is used to edit the properties of an individual animation sequence including the sequence name, selecting the frames per second, and the sequence start and end frames.

Note: You can also modify sequence properties via the Sequence Properties dialog (on page 341).

Procedure

To modify animation sequence settings:

1. Open the Animation Options dialog (on page 255).
2. Select the animation sequence and click **Edit**.
3. Modify the settings as required and click **OK**.

Interface

Name—The name of the selected animation sequence.

Start—Determines the number of the frame where the animation sequence begins.

End—Determines the number of the frame where the animation sequence ends.

FPS—Determines the frames per second, that is, the number of frames of an animation sequence that are displayed every second. This setting reflects on the playback system as various film, computer, and TV playback systems differ.

Note: The higher the frame rate, the more processing power and system bandwidth are required.

OK—Closes the dialog and saves the settings.

Cancel—Closes the dialog. Any changes made to the settings are lost.

Help—Opens the relevant Help topic.

Animation Timeline

Menu bar > View > Controls and Toolbars > Animation Timeline
Right-click menu bar > Animation Timeline
Customize Layout dialog > Controls tab > Select Animation Timeline > OK

The animation timeline can be used to create and modify keyframe animation on models. It shows the animation sequence hierarchy for the selected object, with time progressing in a graph-like display beginning at the left. 'Time' is marked in frames, seconds, MM:SS, or SMPTE in the 'time display slider' depending on the current time display. The relationship of frames to real time varies depending on the FPS setting for the selected sequence. The default is about 30 frames to 1 second.

All sequences for the selected object are displayed in the hierarchy, and each sequence can contain a 'track' for the animation position, rotation, scale, and opacity.

Keys can be created for three different tracks: position, rotation, scale, and opacity. A right-click menu is available to modify the animation tracks. This menu can also be used to insert, edit, and delete keys, and to choose a 'mode' in which to select keys and view the timeline.

Note: When creating keys, the animation movement can become 'jerky' if too many keys are inserted or if they are placed close together.

Copyright © Right Hemisphere 2006. All Rights Reserved.

The purple 'time/frame line' shows your current time or frame depending on the current time display. You can change the view by clicking within the timeline, or by moving the time/frame slider in the animation controls (on page 254). The time/frame line reflects the selected view.

The timeline can be resized, moved, floated, docked, and closed (on page 345) similar to the functionality in most Windows applications. Various right-click menus (on page 322) are available on the hierarchy nodes to edit the animation.

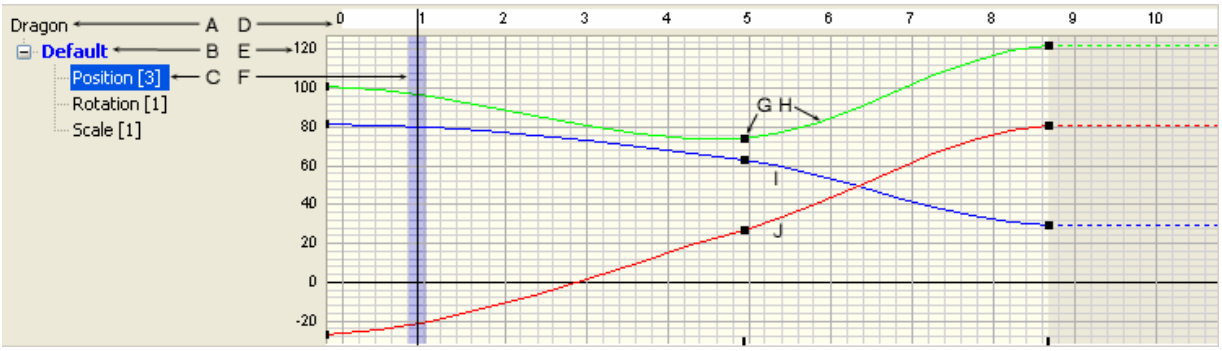

A: Object name
B: Sequence name
C: Current track
D: Time display slider
E: Component values
F: Time/frame line
G: Key
H: X axis (green)
I: Y axis (blue)
J: Z axis (red)

Procedures

To display the timeline:

- Click an **Edit Keyframes** button  for a property in the Object Properties (on page 271) or Material Properties (on page 282) dialogs.
- Click **View > Controls and Toolbars > Animation Timeline** on the menu bar.
- Right-click the menu bar and click **Animation Timeline**.

To display tracks:

Click the tracks in the sequence hierarchy.

To create a key:

1. Select the object to which you want to add a key.
2. Right-click in the time/frame where you want to insert the key.
3. Click **Insert Key**.

A key is inserted on every track for the selected object.

To select a key, do one of the following:

- Click the key in the timeline to select an individual key.
- Drag a box selection in the timeline in Selection mode to select multiple keys.

To edit keys:

1. Select one or more keys.
2. Do one or more of the following:
   - Drag the keys up and down in the timeline to change the component values.
   - Drag the keys along the timeline to change the time/frame.
   - Right-click in the timeline and click **Properties** to edit the keys' properties.
   - Right-click in the timeline and choose **Track Options > TCB Interpolation** or **Track Options > Linear Interpolation** to edit the keys' interpolation (on page 103).
   - Right-click in the timeline and choose **Track Options > Start Cyclic** to set the key as the start point of a cyclic animation.
   - Right-click in the timeline and choose **Track Options > End Cyclic** to set the key as the start point of a cyclic animation.

To delete a key:

1. Select one or more keys.
2. Right-click in the timeline and click **Delete Keys**.

Interface

Sequence hierarchy—Displays the hierarchy of animation sequences for the selected object.

Note: Various right-click menus are available within the timeline with which to edit the animation.

- **Object name**—The name of the selected object. Note that animation sequence hierarchies are displayed for one object at a time.
- **Sequence name**—The name of the sequences that make up the object's animation.
- **Position**—The track that defines the object's position within the animation. As this track is a vector, it contains X, Y, and Z components. You can apply either TCB or linear interpolation to this track. The world coordinate system (on page 77) is used for this track.
- **Rotation**—The track that defines the object's rotation within the animation. The local coordinate system (on page 77) is used for this track.

  Note: You cannot apply TCB interpolation to this track. However, you can 'fake' the curve by adding multiple keys.

- **Scale**—The track that defines the object's scale within the animation. You can apply either TCB or linear interpolation to this track.
- **Opacity**—The track that defines the object's opacity within the animation.

Time display slider—Shows time progressing in a graph-like display beginning at the left with time marked in frames, seconds, MM:SS, or SMPTE depending on the current time display.

Component values—The value divisions of the selected track.

- **Position**—Values reflect the current the scene units (on page 270).
- **Rotation**—Values are based on degrees.
- **Scale**—Values are based on percentages.
- **Opacity**—Values are between 0 and 1.

Time/frame line—Shows your current time/frame. If you move the time/frame slider in the animation controls, this line reflects the selected view.

Key—A fixed position in time and space.

Copyright © Right Hemisphere 2006. All Rights Reserved.

X axis (green)—The X axis on which the track can be positioned, rotated, or scaled.

Y axis (blue)—The Y axis on which the track can be positioned, rotated, or scaled.

Z axis (red)—The Z axis on which the track can be positioned, rotated, or scaled.

Audio Controls

Open audio file



When you open an audio file (on page 106), sound controls are displayed beneath the viewport. These allow you to play, pause, stop, repeat, and mute the sound. You can also raise and lower the volume.

See also Appendix C: Audio File Formats (on page 494).

Interface

 **Play—**Plays the sound forward.

 **Pause**—Pauses the sound from playing.

 **Stop**—Stops the sound from playing.

 **Repeat**—Sets the sound to play continuously from beginning to end.

 **No Repeat**—Stops the sound from playing continuously from beginning to end.

Volume slider—Determines the level at which to play the sound.

 **Mute**—Mutes the sound while the sound continues to play.

Sound slider—Determines the particular moment in the sound to which to move.

Display Settings Panel

Menu bar > View > Controls and Toolbars > Display Settings
Right-click menu bar > Display Settings
Customize Layout dialog > Controls tab > Select Display Settings > OK

The Display Settings panel is used to modify certain render mode settings in real-time (as you work). These settings can be saved within 'themes', enabling you to apply them to scenes quickly, without needing to modify the individual settings more than once. Your selections are applied to the scene immediately.

For example, you can select the material color overrides for the Shaded Illustration render mode and save them to a theme.

The panel can be resized, moved, floated, docked, and closed (on page 345) similar to the functionality in most Windows applications. The options displayed on the panel differ depending on the selected render mode. It also includes a toolbar that can be used to select, save, and delete themes.



Display Settings panel toolbar

Procedures

To show the Display Settings panel, with the panel hidden do one of the following:

- Choose **View > Controls and Toolbars > Display Settings** on the menu bar.
- Right-click the menu bar and click **Display Settings**.
- Open the Customize Layout dialog, select the Display Settings check box in the Controls tab, and then click **OK**.

To hide the Display Settings panel, with the panel displayed do one of the following:

- Choose **View > Controls and Toolbars > Display Settings** on the menu bar.
- Right-click the menu bar and click **Display Settings**.
- Open the Customize Layout dialog, clear the Display Settings check box in the Controls tab, and then click **OK**.

To save display settings as a theme:

1. Open the Display Settings panel.
2. Select the render mode you require in the 'Render mode' field. The options for that render type are displayed.
3. Establish the settings for the render type as required.
4. Click the **Save As** button  on the Display Settings toolbar.
5. Enter a name for the theme in the File name field and click **Save**.

To select a theme:

1. Open the Display Settings panel.
2. Select the theme you require in the theme field.

To delete a theme:

1. Open the Display Settings panel.
2. Select the theme you want to delete in the theme field.
3. Click the **Delete** button  on the Display Settings toolbar.

The theme is deleted.

Interface

Theme—Used to select the theme you want to apply to the scene.

Delete—Delete the current theme.

Save As—Opens the Saves As dialog and is used to save the current settings as a theme.

Render mode (on page 68)—Used to select a render mode in which to display the scene.

- **Bounding box**—Used to select a color for the bounding box.
- **Background top**—Used to set the color of the upper half of the viewports' background gradient.

Copyright © Right Hemisphere 2006. All Rights Reserved.

- **Background bottom**—Used to set the color of the lower half of the viewports' background gradient.
- **Transparent bounding box**—Used to select a color for the transparent bounding box.
- **Wireframe color**—Used to select a color for the wireframe.
- **Outline color**—Used to select an outline color.
- **Object color**—Used to set the top or bottom background color, whichever has the highest luminance, as the object color. That is, the color that is closest to white
- **Outline width**—Determines the width of the outline.
- **Outline angle**—Determines the angle of the outline.
- **Vertices color**—Used to select a color for the vertices.
- **Lights** (on page 70)—Used to select the lighting to apply to the scene.
- **Use existing lights—**Uses all lights from the current file.
- **Calculate specular lights—**Calculates specular lights.
- **Use default material—**Displays the default material on all objects. This is helpful when reviewing files that have very light or dark materials.
- **Use existing smoothing**—Displays the existing smoothing information from the current file.
  - **Smoothing angle—**Determines the degree of the smoothing angle.
- **Show back-facing geometry—**Displays any back-facing geometry.
- **Show transparency—**Displays and hides transparency in those materials that are transparent.
- **Use textures—**Displays textures on objects in Solid render mode. The textures are displayed in the most realistic and detailed representation for the scene.
- **Material Override**—Used to modify the existing materials' properties.
  - **Ambient**—Used to select the transparency and color to apply to the ambient color.
  - **Diffuse**—Used to select the transparency and color to apply to the diffuse color.
  - **Specular**—Used to select the transparency and color to apply to the specular color.
  - **Emission**—Used to select the transparency and color to apply to the emission color.

Information Bar

Menu bar > View > Controls and Toolbars > Information Bar
Right-click menu bar > Information Bar
Customize Layout dialog > Controls tab > Select Information Bar > OK

The Information bar displays an assortment of information relating to the current scene:

- When a scene is first viewed or if no objects are selected, the file icon, name, type, size, and the number of objects, lights, materials, vertices, and faces are displayed.
- When an object is selected, the object name and the number of object points, faces, and materials are displayed.
- The 'External files' link may be available if the file contains textures. For example, if an .asm file contains parts or assemblies, those parts and sub-assemblies are added to an external files list and the External Files link is displayed. External files typically represent textures, parts or assembly files (.asm format), material libraries (.obj format), prototypes (.vrml format), and include files (.vrml, .wrl formats).
- The 'Scene information' link may be available for certain scenes.

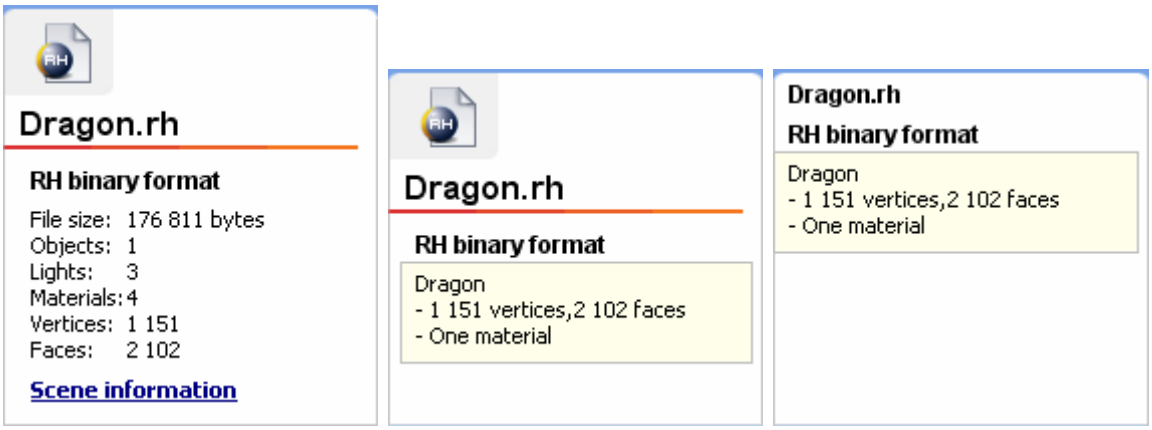

Information bar: Classic no selection / Classic object selected / Compact object selected

A right-click menu (on page 335) is available from where you can display the bar in a compacted or classic view.

The bar can be resized, moved, floated, docked, and closed (on page 345) similar to the functionality in most Windows applications.

Procedures

To display related external files:

With no objects or materials selected, click the **External Files** link.

To display scene information:

With no objects or materials selected, click the **Scene information** link.

To display a classic or compact view, do one of the following:

- Right-click the Information bar and click **Compact View** to reduce the size of the bar.
- Right-click the Information bar and click **Classic View** to display the regular view of the bar.

Interface

External files—Displays all external texture files used by the current scene. This link is only displayed if the file contains textures.

Scene information—Displays information relating to the scene if the format supports such information. For example, file related comments such as author copyrights.

Level of Detail Controls

Menu bar > View > Controls and Toolbars > Level of Detail
Right-click menu bar > Level of Detail
Customize Layout dialog > Controls tab > Select Level of Detail > OK



Certain file formats store level of detail (LOD). LOD is a way of displaying models with different numbers of polygons depending on how close they are to the camera. It can speed up the rendering time by limiting the number of polygons that need to be drawn when viewing models from either a distance or at a close range.

Copyright © Right Hemisphere 2006. All Rights Reserved.

There are two methods utilized by files to store LOD:

- Explicit. Several different versions of each mesh are explicitly stored in the scene hierarchy. Each mesh corresponds to a different LOD. For example, OpenFlight files use this method to store LOD.
- Dynamic. Meshes for each LOD are created dynamically and are not necessarily visible in the scene hierarchy. For example, U3D files store a continuous LOD.

LOD can be imported (on page 43) for files that store it, and then the Level of Detail slider can be used to view the model at any available LOD. The slider also displays the current LOD.

The following examples show the same model displayed in the first instance with a low LOD, and in the second instance with a high LOD; the difference is most significant between the wheels and the vehicle's interior.

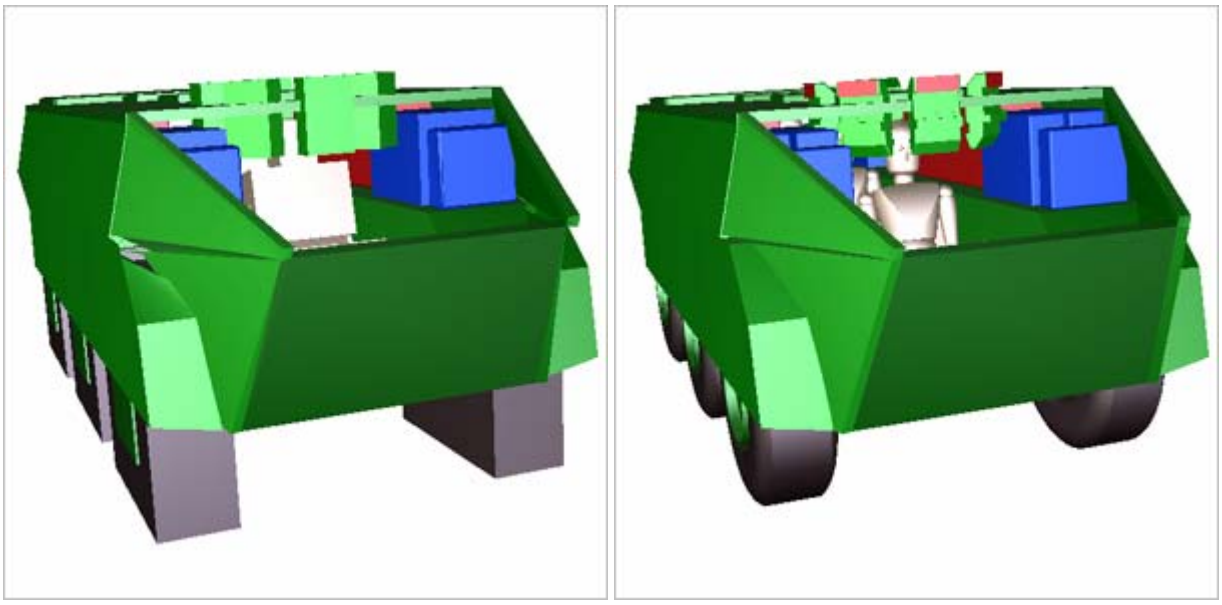

Low level of detail / High level of detail

The controls can be resized, moved, floated, docked, and closed (on page 345) similar to the functionality in most Windows applications.

Procedure

To view different LODs:

1. Ensure the file was imported with LOD.
2. Move the Level of Detail slider until the LOD you want is displayed.

Interface

Level of Detail slider—Shows your current LOD and is used to display all the available LODs.

Model Views Panel

Menu bar > View > Controls and Toolbars > Model Views
Right-click menu bar > Model Views
Customize Layout dialog > Controls tab > Select Model Views > OK

The Model Views panel presents, and is used to control all user-defined model views; you can create and delete model views, and modify their properties.

The panel can be resized, moved, floated, docked, and closed (on page 345) similar to the functionality in most Windows applications. The options displayed on the panel differ depending on the selected render mode.

A right-click menu (on page 335) is available from where you can activate the views and edit their names. It also includes a toolbar that can be used to select, save, and delete themes.



Model Views panel toolbar

Procedure

To toggle the display of the Model Views panel, do one of the following:

- Choose **View > Controls and Toolbars > Model Views** on the menu bar.
- Right-click the menu bar and click **Model Views**.
- Open the Customize Layout dialog, select or clear the Model Views check box in the Controls tab, and then click **OK**.

Interface

 **Create** (on page 75)—Creates a model view based on the current camera, render mode, and selected objects.

 **Delete** (on page 75)—Deletes the selected model view.

 **Thumbnails**—Displays a thumbnail view with the name of each file.

 **Activate** (on page 75)—Plays the model view forward.

Model View Properties Dialog

Model Views panel > Right-click model view > Model View Properties

The Model View Properties dialog is used to modify model view properties including the model view name and description.

Interface

Name—Used to edit the model view's name.

Description—Used to edit the model view's description.

Copyright © Right Hemisphere 2006. All Rights Reserved.

OK—Closes the dialog. Any changes made to the settings are saved.

Cancel—Closes the dialog. Any changes made to the settings are lost.

Help—Opens the relevant Help topic.

Object Position Controls

Menu bar > View > Controls and Toolbars > Object Position
Right-click menu bar > Controls and Toolbars > Object Position
Customize Layout dialog > Controls tab > Select Object Position > OK



The Object Position controls are linked to the 3D Editor toolbar (on page 295), and are used to transform (on page 90) (modify the position, rotation, and scale) individual and grouped objects along their individual axes interactively. That is, by typing in absolute coordinates to precisely transform objects. This can be helpful for more accurate animation control and alignment for precision training applications or simulations.

The controls can be resized, moved, floated, docked, and closed (on page 345) similar to the functionality in most Windows applications.

Note: If you move the scene cross section plane, its original position can be restored via the Scene right-click menu (on page 318).

Interface

X—The selected object's X axis.

Y—The selected object's Y axis.

Z—The selected object's Z axis.

Scene Components Panel

Menu bar > View > Controls and Toolbars > Scene Components
Right-click menu bar > Scene Components
Customize Layout dialog > Controls tab > Select Scene Components > OK

The Scene Components panel is displayed with 3D files and comprises a number of components; the navigation bar, the Scene tree, Materials list, Parts panel, Animation tree, and Layers panel. It is used to control file components from within a tree-view hierarchy. Every node, object, and material is indicated by a separate icon (on page 268).

You can display, hide, select, and edit scene components, edit component properties, draw callouts, edit callout and BOM source settings, and manage layers. You can also group objects and collapse object hierarchy. The navigation bar is used to display the different components, open the Select Objects dialog, and close the panel.

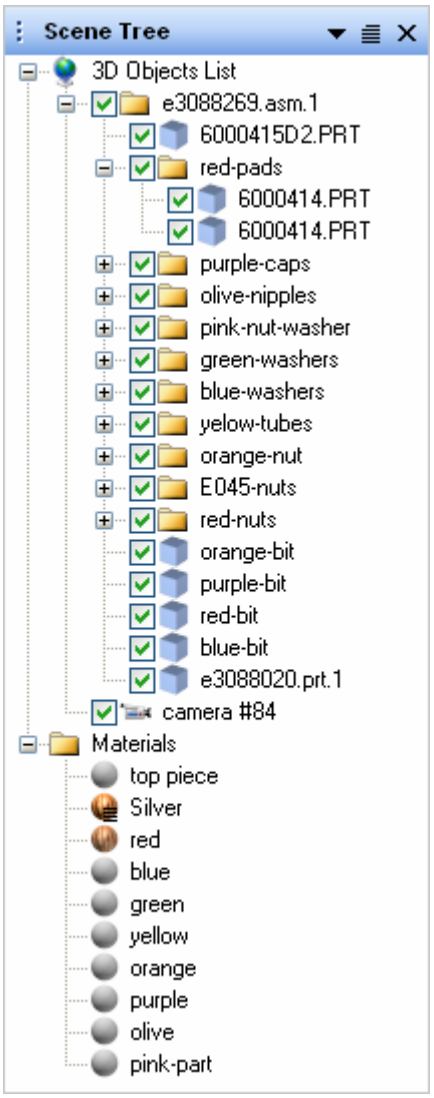

Scene Components panel: Scene tree

Windows hierarchy conventions apply to the panel. For example, if you select an object's parent check box, all child objects are also selected. However, pressing CTRL and selecting a parent check box, selects only that object.

The bar can be resized, moved, floated, docked, and closed (on page 345) similar to the functionality in most Windows applications. It also includes various context-sensitive right-click menus (on page 336) that relate to the area you are using.

Procedure

To display the panel's components:

1. Click the down arrow  in the panel.
2. Click one of the following:
   - **Scene Tree** to display the Scene tree.
   - **Materials** to display the Materials list.
   - **Parts** to display the Parts panel.
   - **Animation** to display the Animation tree.

Copyright © Right Hemisphere 2006. All Rights Reserved.

- **Layers** panel to display the Layers panel.

Interface

Scene Tree (on page 269)—Comprises the 3D Objects list and the Materials folder.

- **3D Objects list**—Displays all objects within a scene.
- **Materials folder**—Displays all materials within a scene.

Materials (on page 287)—Displays a list of all materials.

Parts—Displays a list of all parts.

Animation (on page 289)—Displays all animation objects in a tree-view hierarchy.

Layers (on page 289)—Displays the Layers panel.

Select Objects (on page 289)—Opens the Select Objects dialog and is used to select multiple objects by name, size, polygon count, and vertex count.

Scene Component Panel Icons

Every node, object, and material displayed in the Scene Components panel (on page 266) is indicated by an icon.

Interface

 **3D Objects list node**

 **Grouped objects node**

 **Single object**

 **Bone object**

 **Camera object**

 **Light object**

 **Level of Detail object**

 **Target object**

 **Markup object**

 **Materials folder node**

 **Material with no map**

 **Material with one map**

 **Material with multiple maps**

Scene Tree

Scene Components panel > Scene tree

The Scene tree comprises the 3D Objects list and the Materials folder. It can be used to select objects and materials within scenes. Scenes can be enhanced by modifying the scene, object, or material properties.

The tree's check boxes can be used to show and hide objects. They respect hierarchy if it is present; clearing the highest check box in a hierarchy clears all subordinate check boxes.

Note: You can also use the 3D viewport right-click menu (on page 315) to show and hide objects.

A number of properties can be set for 3D scenes, objects and materials using the dialog boxes. Additionally you can also search for and select objects using the Select Objects dialog.

Many of the tabs on these dialogs display a button in the lower left of the tab, which is used to copy all the information within the selected tab to the clipboard. You can copy information from various tabs including the Transformation, Materials, Geometry, Attributes, and Information tabs in the Object Properties dialog, and the Basic tab in the Material Properties dialog.

Many tabs also display Edit Keyframes buttons  beside certain properties. If you click one of these buttons, a timeline is displayed when you can create and modify keyframe animation (on page 101) for the selected property. Once you have modified animation for a particular property, the property field is displayed within a red line.

For example, if you edit animation on the Opacity field in the Attributes tab, a red line surrounds the field is shown in the image below.

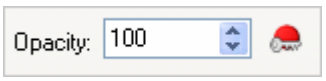

Opacity field after editing keyframe animation

3D Objects List

The 3D Objects list presents, and is used to control all of a scene's objects and materials from within a tree-view hierarchy. The check boxes can be used to select, display, and hide the objects.

The right-click 3D Objects list menu (on page 336) can be used for object display and selection. This menu increases in importance as the complexity of the scene increases. You can also view and modify the properties of the scene and all its objects.

If markups exist in a scene, the markup objects are displayed in this list, from where they can be edited, hidden, and deleted.

Materials Folder

The Materials folder presents, and is used to control the materials within a scene. A right-click context menu (on page 337) is also available from where you can control the materials.

Note: You can also view the scene's materials in the Materials list.

Copyright © Right Hemisphere 2006. All Rights Reserved.

Procedures

To modify scene, object, and material properties:

1. Open the Scene Properties (on page 270), Object Properties (on page 271), or the Material Properties dialog (on page 282).
2. Make the selections you require.
3. Click **Apply** and then click **OK**.

To copy tab information to the clipboard:

1. Open the dialog from which you want to copy information.
2. Click the tab you require.
3. Click the Copy to Clipboard button .
4. Paste the information to the location you require.

Scene Properties Dialog

Scene tree > 3D Objects list > Double-click 3D Objects node
Scene tree > 3D Objects list > Right-click with no selection > Scene Properties
Right-click 3D viewport with no selection > Scene Properties

A number of properties can be set for 3D scenes including the ambient and illumination colors.

Procedure

To open the Scene Properties dialog, do one of the following:

- Double-click the 3D Objects node in the 3D Objects list.
- Right-click in the 3D Objects list with nothing selected, and then click **Scene Properties**.
- Right-click in the 3D viewport with nothing selected, and then click **Scene Properties**.

Environment Tab

Scene Properties dialog > Environment tab

The Environment tab is used to modify the global display settings including scene's environment attributes and the unit measurement.

Interface

Global ambient color—Opens the color selector and is used to select a color for the scene's ambient color.

Global illumination color—Opens the color selector and is used to select a color for the scene's illumination color.

Units—Used to select the unit type for which you want to view its custom unit (scene unit) measurement in meters. For example, 1 custom unit = 0.01 meters.

Custom unit—Displays the custom unit measurement for the selected unit type.

Grid position—Determines the position of the grid relative to the model.

OK—Applies and saves the settings, and then closes the dialog.

Cancel—Closes the dialog. Any changes made to the settings are lost.

Apply—Applies the settings.

Help—Opens the relevant Help topic.

Summary Tab

Scene Properties dialog > Summary tab

The Summary tab is used to view a summary of all information relating to the scene's appearance including the number of meshes, textures, points, normals, and faces.

This information is automatically updated when you modify any associated object's or material's properties.

Advanced Tab

Scene Properties dialog > Advanced tab

The Advanced tab is used to modify the scene shadow, a number of global display settings, and the scene colors.

The scene color settings for various elements including the scene bounding box, scene axes, and vertices, are displayed via the Display menu (on page 208) and Display toolbar (on page 298). Changing the color of an element affects all file formats. Note that the color can only be changed for elements that have been enabled in the original images or model.

Note: The color settings can also be modified via the Options dialog (on page 224). They are unrelated to the Render modes (on page 68).

Please note that if you modify the bounding box, vertices, wire frame, object axes, and surface normals settings, you must select the related check boxes on the 3D View tab (on page 225) to apply your color settings.

Interface

Shadow—Used to modify the scene's shadow settings. Note that the objects in the scene must cast and/or receive shadows (on page 272) for these settings to be applied.

- **Image size**—Used to select the resolution of the shadow.
- **Blur radius**—Determines how much to blur the edges of the shadows.
- **Double-sided**—Displays the shadow as double-sided.
- **Opacity**—Determines the opacity of the shadows in the scene.

Object Properties Dialog

3D Objects list/Parts panel > Right-click an object > Object Properties
Animation tree/Layers panel > Right-click an object > Object Properties
3D Objects list/Parts panel > Double-click object
Animation tree/Layers panel > Double-click object
Right-click selected object in 3D viewport > Object Properties
Double-click object in 3D viewport

A number of properties can be viewed and/or set for individual objects using the Object Properties dialog. The available tabs differ depending on the selected object. You can also open the Material Properties dialog (on page 282) for any materials associated with the object.

Copyright © Right Hemisphere 2006. All Rights Reserved.

As these settings apply only to individual objects, you can apply a render method to objects that are separate from the render method applied to the entire scene. Note that you cannot modify 'parent' objects. That is, objects that contain sub-objects (child objects).

If you double-click a markup object or select to view properties of a markup object, the Edit Markup dialog is displayed from where you can edit the markup (on page 141).

You can also open the Material Properties dialog (on page 282) from within the Object Properties dialog for any materials that are associated with the object.

Note that where the Edit Keyframes button  is displayed beside an option, keyframe editing (on page 101) is available for the property.

Procedure

To open the Object Properties dialog, do one of the following:

- Double-click an object or a part in the 3D Objects list, Parts or Layers panel, or Animation tree, and then click **Object Properties**.
- Right-click an object or a part in the 33D Objects list, Parts or Layers panel, or Animation tree, and then click **Object Properties**.
- Open the Materials Properties dialog for a material associated with the object, click the Usage tab, select the object in the used objects list, and then click **Object Properties**.

Note: The Properties dialog for the cross section plane object can only be accessed by double-clicking the plane in the viewport.

Attributes Tab

Object Properties dialog > Attributes tab

The Attributes tab is used to edit the selected object's attributes including shadows, the render method, and the smoothing angle.

Note that this tab is disabled when multiple objects of a different type are selected. For example, a light object, a camera object, and a mesh object.

Note: Where the Edit Keyframes button  is displayed, keyframe editing (on page 101) is available for that property.

Interface

Attributes—Used to establish the properties for the object's characteristics.

- **Cast shadows**—The selected object casts shadows (on page 271) on the other objects in the scene, if the other objects are set to receive shadows.
- **Receive shadows**—The selected object receives shadows that are cast by other objects in the scene, if the other objects are set to cast shadows.
- **Double-sided**—Applies the double-sided attribute to the selected object. Note that this this option disables back-facing culling.
- **Closed**—Prevents sub-objects of the selected group from being individually selected. That is, the entire object group is selected when you select any sub-object in the viewport.

Note: This does not apply to selecting objects using the check boxes in the Scene Components panel (on page 266).

- **Selectable**—Allows you to select the object in the 3D viewport. Otherwise, you can only select it via the Scene Components panel.

Appearance—Used to establish the properties for the object's appearance.

- **Render method**—Used to select the render method of the object independently of the current scene rendering method. The render settings established using the Display Settings panel (on page 260) are used to display the object.
- **Render order**—Used to select the render order number for the scene. Objects with a 0 (zero) render order are rendered first and objects with a 10 (ten) the render order are rendered last, lying over the top of earlier objects. This feature is designed to support sub-faces in the file format.
- **Opacity**—Determines the opacity of the object. Opacity is the opposite of transparency. As you reduce the opacity value, the object becomes more transparent.
- **Smoothing angle**—Determines the smoothing angle.
- **Local smoothing angle**—Applies the selected smoothing angle. This setting is local, that is, it changes the smoothing for the selected object and override any global smoothing settings (on page 212). This option does not affect raytracing results.

Comments—The comments that relate to the object.

Object Tab

Object Properties dialog > Object tab

The Object tab is used to view and edit the properties of the selected object.

Note that this tab is disabled when multiple objects are selected.

Interface

Object window—Displays the selected object and any modifiers that may have been applied to the object.

Item Information Window (on page 273)—Used to view and modify the properties for the object displayed in the object window.

Add—Adds an instance of the selected object to the object node.

Remove—Removes the selected object from the scene.

Properties—Opens another Properties dialog and is used to view any additional properties for the selected object. For example, the Bone tab is displayed for bone objects and the Light tab is displayed for light objects.

Item Information Window

Object Properties dialog > Object tab

The Item Information window is used to view and modify the properties for the object displayed in the window of the Object Properties dialog. The options displayed differ depending on the selected object type. For example, camera, skin, bone, mesh, or light objects.

Many of the options are also available from the object dialogs, and as such are described in the individual object topics.

Copyright © Right Hemisphere 2006. All Rights Reserved.

Interface

Bone Object

Appearance (on page 276)—Displays information about the selected bone.

Camera Object

Camera (on page 276)—Used to establish general camera settings.

- **Perspective**—Views the scene in perspective mode. Otherwise, the scene is viewed orthographically.
- **Zoom factor**—Applies the specified magnification to scene.
- **Field of view (FOV)**—Determines the angle of the field of view (FOV) to best fit a model in the scene. A low value displays a close up of the entire object, and a high value views the object from a greater distance.
- **FOV direction flyout**—Used to select the direction with which the FOV angle is applied to the viewport (render target).
  - **Minimum from width/height**—Calculates and applies the FOV based on either the viewport width or height, whatever dimension is the lesser.
  - **Maximum from width/height**—Calculates and applies the FOV based on either the viewport width or height, whatever dimension is the greater.
  - **Horizontally**—Calculates and applies the FOV based on the width of the viewport.
  - **Vertically**—Calculates and applies the FOV based on the height of the viewport.
- **Near clip-plane**—Determines the distance between the camera and the near clipping plane.
- **Far clip-plane**—Determines the distance between the camera and the far clipping plane.

Local Coordinates—Used to establish the position of the camera relative to the local origin in the scene.

- **Origin**—Displays the coordinates of the origin of the frame of reference in the scene. Usually this is 0,0,0 unless the target point is location under a hierarchy.
- **Target**—Displays the coordinates of the target point that the camera is aiming at in the scene.
- **Up point**—Displays the coordinates of the camera's 'up point'. That is, the coordinates that forces the camera's view to be straight up. Camera's are defined by three things: an eye (or camera) location, a target location, and an up point. The cameras up point should almost always point straight up. For example, the coordinates 0,0,1 are a straight up point along the Z axis if the Z axis is straight up.

Light Object

Light—Used to establish general light settings.

- **Light type**—Displays the type of light that is selected. This is mapped from the many possible kinds of lights that can exist in the many supported formats and simplified to the model used in Deep Exploration.
- **Light color**—Used to open the color selector and select a color for the light.
- **Scale factor**—The intensity of light. For example, if a value of 2 is entered, the intensity is two times the light setting. If .5 is entered, the intensity is a half.
- **Inner radius**—The inner radius of the light beam.
- **Outer radius**—The outer radius of the light beam.

Attenuation—Used to establish the attenuation settings for the light. Light attenuation is a vector of attenuation factors. 'Point' or 'spot' lights will light objects based on the distance from the object's vertices to the light's position based on certain formulas as described below.

- **None**—Does not attenuate the light.
- **Linear**—Displays light as a linear attenuation between two values.
- **Exponential**—Displays attenuated light based on the formula 1 / (C + L*D + Q*D*D), where D=the distance from the vertex position to the light position, C=the attenuation constant factor, L=the attenuation linear factor, and Q=the attenuation quadratic factor.
  - **Constant**—The constant factor (C in the equation) used to calculate exponential attenuated light.
  - **Linear**—The linear factor (L in the equation) used to calculate exponential attenuated light.
  - **Quadratic**—The quadratic factor (Q in the equation) used to calculate exponential attenuated light.

Modifier Object

Appearance (on page 303)—Used to establish the modifier settings.

Polygonal Mesh

Statistics—Displays information relating to the selected mesh object.

- **Number of points**—The number of vertices in the object.
- **Number of faces**—The number of faces in the object.
- **Texture points**—The number of texture vertices in the object.
- **Normal points**—The number of normal vertices in the object.

Procedural Object

Appearance (on page 303)—Used to establish the primitive settings.

Skin Object

Bones—Displays information relating to the bones that are connected to the skin and the number of vertices that are influenced by each bone.

BREP Tab

Object Properties dialog > Object tab > Properties > BREP tab
Double-click the object in the object window > BREP tab

The BREP tab becomes available when you display the properties of an individual NURBS BREP object.

BREP objects consist of several NURBS surfaces and trimmed curves attached to each surface. These curves may cut any shape from the original rectangular surface. When all of these surfaces are connected together, any geometry object can be represented.

You can double-click any row in the BREP tab to display the a summary of the NURBS surface information.

Interface

Faces—Displays the parameters that determines the shape of the BREP's face.

Copyright © Right Hemisphere 2006. All Rights Reserved.

- **Knots**—The number of knots used to join the pieces of each face. BREP knots are similar in nature to that of the knots used to join pieces of string. The knot values are expressed in the U and V directions.
- **Order**—The minimum number of control points required to define the shape of the face. The resulting face is equal to the sum of the effects from each control point. The order is expressed in the U and V directions.
- **Control Points**—Determines the profile of the face. The resulting face is equal to the sum of the effects from each control point. A control point is like a magnet and a BREP face is like a strip of thin ferrous metal. The magnets are placed a various distances away from the metal. The metal is distorted. These distortions are created by the different magnetic strengths due to the proximity of the magnets to the metal strip.
- **Trim Curves**—The number of loops that define the boundaries of a trimmed curve. Loops are formed by trimming curves or boundary curves.

Note: A surface has at least one loop. Higher numbers of loops are determined by the surface geometry. For example, if there is a hole in the surface, the surface will have two loops.

Mesh Properties (on page 278)—Displays the properties for the selected object's mesh.

Bone Tab

Object Properties dialog > Object tab > Properties> Bone tab
Double-click the object in the object window > Bone tab

The Bone tab is available when you display the properties of an individual object that includes bones. It displays all information relating to the bones in the selected object including the bone length, radius, and the objects and vertices affected by the bone.

Interface

- **Length**—The length of the bone when it is resting in scene units (on page 270).
- **Function**—The function used to calculate how the skin attached to the bone is to be moved based on the bone movement.
- **Minimum radius**—The minimum radius of the bone. That is, the narrowest part of the bone. This is only applied to bones with limited ranges.
- **Maximum radius**—The maximum radius of the bone. That is, the widest part of the bone. This is only applied to bones with limited ranges.
- **Weight map**—The weight map that is applied to the bone. The weight map dictates how the bone moves.
- **Strength**—The strength of the bone. This factor indicates how much the bone will affect the skin.
- **Unlimited**—Skin is affected by bone movement by ignoring points on the skin that are closer than the minimum radius, and affecting points on the skin that are further than the maximum radius. Otherwise, all points on the skin are affected by bone movement. The radius is the area around the bone within which mesh points are influenced by bone movement.
- **Weight map only**—Any deformations on the bones are solely based on the weight map and not the function.

Camera Tab

Object Properties dialog > Object tab > Properties > Camera tab
Double-click the object in the object window > Camera tab

The Camera tab is available when you display the properties of an individual camera object. It enables you to modify the camera object including changing the field of view (FOV), the way in which the FOV is applied to the scene, and the camera's target object.

Field of View

For any viewport there are two field of views (FOVs) in effect; horizontal and vertical. For simplicity, you only need to specify one of these, and the other one is calculated based on the aspect ratio of the viewport. Note that it is only the ratio of width to height that is important; the actual size of the viewport is irrelevant. For example, if a camera is set to have a FOV of 30° applied horizontally, and the viewport is exactly square, the vertical FOV is also 30°.

By using the minimum from width/height value, the FOV is calculated and applied to either the viewport width or the height, whatever dimension is the lesser. Conversely, the maximum width/height value calculates and applies FOV to the viewport width or the height, whatever dimension is the greater. Therefore, if the 30° FOV is applied to the maximum from width/height, then 30° by 30° is the most that is ever seen of the scene.

If a scene is significantly longer in one direction than the other, and you want to capture the whole scene in one rendering,we recommend matching the FOV direction to the smallest dimension of the scene.

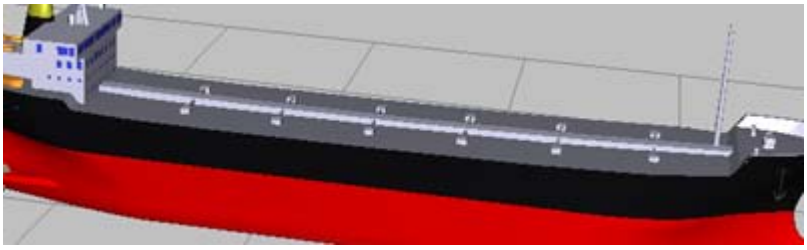

30° FOV applied horizontally on a wide model

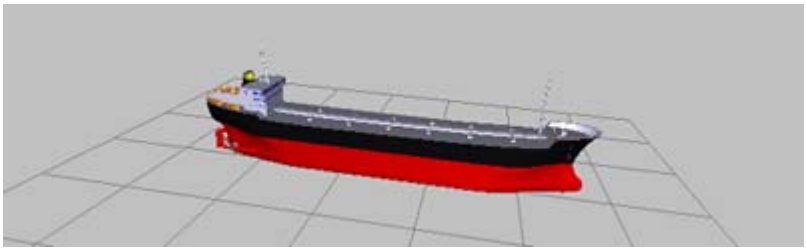

30° FOV applied vertically on a wide model

Cross Section Plane

The cross section plane lets you exclude some of a scene's geometry to view or render only certain portions of the scene. Each camera has a near and a far clipping plane. Objects closer than the near clipping plane or further than the far clipping plane are invisible to the camera. Cross section planes are useful for rendering selected portions of a scene that have a lot of complex geometry. They can also help you create cutaway views. Clipping plane settings are part of the camera's creation parameters.

The location of each clipping plane is measured along the camera's line of sight (its local Z axis) in the current units for the scene.

By setting the distance between the camera and the camera clipping planes, you can select how far you can zoom in to and out from the model while still seeing the objects' details. For example, if you reduce the near clipping plane distance, you are able to zoom in much further to the model and see more detail. Conversely, if you reduce the far clipping plane distance, objects seem to disappear much more quickly as you zoom out from the model.

Note: Where the Edit Keyframes button  is displayed, keyframe editing (on page 101) is available for that property.

Copyright © Right Hemisphere 2006. All Rights Reserved.

Interface

Field of view (FOV)—Determines the angle of the field of view (FOV) to best fit a model in the scene. A low value displays a close up of the entire object, and a high value views the object from a greater distance.

FOV direction flyout—Used to select the direction with which the FOV angle is applied to the viewport (render target).

- **Minimum from width/height**—Calculates and applies the FOV based on either the viewport width or height, whatever dimension is the lesser.
- **Maximum from width/height**—Calculates and applies the FOV based on either the viewport width or height, whatever dimension is the greater.
- **Horizontally**—Calculates and applies the FOV based on the width of the viewport.
- **Vertically**—Calculates and applies the FOV based on the height of the viewport.

Target—Used to select the object on which the camera targets. If a target is used, you can turn the camera to focus on the target object and the object will always be centre of view. For example, if you create an auto fly-around.

Custom clip-plane—Enables the near and far cross section fields to determine the distance between the camera and the camera's clipping planes.

- **Near clip-plane**—Determines the distance between the camera and the near clipping plane.
- **Far clip-plane**—Determines the distance between the camera and the far clipping plane.

Activate—Displays the scene through the current camera.

Geometry Tab

Object Properties dialog > Object tab > Properties> Geometry tab
Double-click the object in the object window > Geometry tab

The Geometry tab displays the geometry values for the selected object from a list of display options including the vertex coordinates, color faces, and texture faces.

You can delete the geometry value arrays using the Delete button .

Interface

Items—Used to display values for the different types of geometry.

- **Array of vertex coordinates**—Displays the vertex coordinate values.
- **Array of faces**—Displays the face geometry values.
- **Array of smoothing groups**—Displays the geometry values for smoothing groups.
- **Array of texture coordinates**—Displays the texture coordinate values.
- **Array of normals faces**—Displays the geometry index values for normals faces.
- **Array of texture faces**—Displays the geometry values for texture faces.
- **Array of per vertex colors**—Displays the color values per vertex.
- **Array of color faces**—Displays the geometry values for color faces.
- **Array of per face materials**—Displays the material values per face.
- **Array of per faces flags**—Displays the flag values per face.
- **Per triangle bump tangents**—Displays the geometry values per triangle bump tangents.

Delete—Deletes the selected array of values.

Light Tab

Object Properties dialog > Object tab > Properties> Light tab
Double-click the object in the object window > Light tab

The Light tab is available when you display the properties of an individual light object. It enables you to modify the light object including the light's color, intensity, and shadow.

Interface

Color—Used to open the color selector and select a color for the light.

Intensity—Determines the intensity of the light.

Shadow—Casts a shadow from the scene's objects on raytrace renders.

NURBS Curve Tab

Object Properties dialog > Object tab > Properties > NURBS Curve tab
Double-click the object in the object window > NURBS Curve tab

The NURBS Curve tab becomes available when you display the properties of an individual NURBS curve object.

Interface

NURBS Curve Window—Displays the parameters that determine the shape of the NURBS curve.

Mesh Properties (on page 278)—Displays the properties for the selected object's mesh.

NURBS Surface Tab

Object Properties dialog > Object tab > Properties > NURBS Surface tab
Double-click the object in the object window > NURBS Surface tab

The NURBS Surface tab becomes available when you display the properties of an individual NURBS surface object.

Interface

NURBS Surface Window—Displays the parameters that determine the shape of the NURBS surface.

Mesh Properties (on page 278)—Displays the properties for the selected object's mesh.

UV Tab

Object Properties dialog > Object tab > Properties> UV tab
Double-click the object in the object window > UV tab

The UV tab becomes available when you display the properties of an individual object that includes UVs. It enables you to display the UVs for the scene's texture maps, and to zoom the map within the tab display.

Interface

Texture map—Used to select a texture map to display.



Pan (on page 62)—Moves the texture map in the tab display.

Copyright © Right Hemisphere 2006. All Rights Reserved.

 **Scale** (on page 64)—Magnifies and reduces the magnification of the texture map.

 **Zoom Window** (on page 65)—Magnifies the selected area in the texture map.

 **Zoom In** (on page 65)—Magnifies the selected texture map.

 **Zoom Out** (on page 65)—Reduces the magnification of the selected texture map.

 **Best Fit** (on page 65)—Displays the texture map as it fits best in the tab display.



Standard View (on page 65)—Displays the texture map at its actual size within the tab display.

Color—Opens the color selector and is used to select the color to display the wireframes in the tab display.

Information Tab

Object Properties dialog > Information tab

The Information tab is used to view a summary of the information relating to the object's appearance including the number of vertices and faces, any texture coordinates, the parent object name (if any), and any animation values.

The information is automatically updated when you modify the properties of either the object or any associated material.

Interface

OK—Applies and saves the settings, and then closes the dialog.

Cancel—Closes the dialog. Any changes made to the settings are lost.

Apply—Applies the settings.

Help—Opens the relevant Help topic.

Materials Tab

Object Properties dialog > Materials tab

The Materials tab displays the numbers, names, textures, and faces of the materials assigned to the selected object. It can also be used to access the Material Properties dialog where you can view and modify the selected material's properties.

Procedure

To open the Material Properties dialog from the Materials tab:

Click the **Material properties** link on the Materials tab.

Interface

Material Properties (on page 282)—Opens the Materials Properties dialog and is used to modify the selected material's properties.

Number—Displays the system generated numbers of the materials used by the object.

Name—Displays the names of the materials used by the object.

Texture—Displays the texture files of the materials used by the object.

Faces—Displays the number of faces of the materials used by the object.

Transformation Tab

Object Properties dialog > Transformation tab
Cross Section Properties dialog > Transformation tab

The Transformation tab displays the selected 3D objects geometry and transformation information including the transform values (position, rotation, scale, and shear) of the selected objects along the axes. These are displayed encoded in a matrix and are relative to the world coordinate system (on page 77) by default.

An object's 'extents' are its maximum dimensions in X, Y, and Z. These are the dimensions of the rectangular bounding box that surrounds the object in local object coordinate system.

The selected object's name can be edited using this tab; if you select multiple objects and edit the name, the names of all selected object's are changed.

Note: Where the Edit Keyframes button  is displayed, keyframe editing (on page 101) is available for that property.

Interface

Name—Used to edit the object's name.

Color—Sets the color for the object's wireframe when the scene is displayed in Wireframe render mode. (on page 68)

Position—The position of the object along the X, Y, and Z axes. The values are relative to the parent coordinate system if it is a child object and the 'Relative to parent coordinate system' check box is selected.

Rotation—The object's rotation about the X, Y, and Z axes. The values are relative to the parent coordinate system if it is a child object and the 'Relative to parent coordinate system' check box is selected.

Scale—The object's scale along the X, Y, and Z axes. The values are relative to the parent coordinate system if it is a child object and the 'Relative to parent coordinate system' check box is selected.

Shear—The object's shear along the X, Y, and Z axes relative. The values are relative to the parent coordinate system if it is a child object and the 'Relative to parent coordinate system' check box is selected.

Transform matrix—The transform values of the selected object. The values are relative to the parent coordinate system if it is a child object and the 'Relative to parent coordinate system' check box is selected.

Relative to parent coordinate system—The position, rotation, scale, shear, and transform matrix values relative to the parent coordinate system.

Copyright © Right Hemisphere 2006. All Rights Reserved.

Dimension—The object's dimensions along the X, Y, and Z axes.

Roll—The angle of roll for the selected camera. This field is only available for camera objects.

Material Properties Dialog

Scene Components panel > Materials folder > Double-click material
Scene Components panel > Materials folder > Right-click a material > Material Properties
Scene Components panel > Materials list > Double-click material
Scene Components panel > Materials list > Right-click a material > Material Properties

You can view and modify material properties using the Material Properties dialog. Material properties describe how polygons reflect light, or appear to emit light, in a 3D scene. Essentially, a material is a set of properties that provide various information about the polygons being rendered including:

- How they reflect ambient and diffuse light.
- What their specular highlights look like.
- Whether the polygons appear to emit light.

Material properties detail a material's diffuse reflection, ambient reflection, light emission, specular highlight characteristics, glossiness etc. Material properties affect the colors that are used. With the exception of the specular property, each property is described as an RGBA color that represents how much of the red, green, and blue parts of a given type of light it reflects, and an alpha blending factor - the alpha component of the RGBA color.

Where the Edit Keyframes  button is displayed beside an option, keyframe editing (on page 101) is available for the property.

Note: You can also open the Object Properties dialog (on page 271) from within the Material Properties dialog for any materials that are associated with the object.

Procedure

To open the Material Properties dialog, do one of the following:

- Double-click a material in the Materials folder or Materials list, and click **Material Properties**.
- Right-click a material in the Materials folder or Materials list, and click **Material Properties**.
- Open the Object Properties dialog for an object that is associated with the material, click the Materials tab, select the material in the used materials list, and then click **Material Properties**.

Basic Tab

Material Properties dialog > Basic tab

The Basic tab is used to adjust the appearance of the material including the ambient light, opacity across all channels, and shading. Note that 'alpha' for a specific channel (ambient, diffuse, specular, etc) is controlled by using an RGBA map (texture map, bitmap, etc) for that channel via the Maps tab.

Interface

Ambient—Used to select the ambient light color. Ambient light is the light that illuminates the entire scene. It has uniform intensity and is uniformly diffuse. It has no discernible source and no discernible direction. Ambient light has a lesser impact on the apparent color than diffuse light color, but it does affect the overall color and is most noticeable when little or no diffuse light reflects off the material.

Diffuse—Used to select the diffuse light color. Diffuse color describes how a material reflects diffuse light in a scene. Because most scenes contain much more diffuse light than ambient light, diffuse reflection plays the largest part in determining overall color. Additionally, because diffuse light is directional, the angle of incidence for diffuse light affects the overall intensity of the reflection. Diffuse reflection is greatest when the light strikes a vertex parallel to that vertex normal. As the angle of reflection increases, the effect of diffuse reflection diminishes. The amount of light reflected is the cosine of the angle between the incoming light and the vertex normal.

Specular—Used to select the specular light (reflection) color. Specular reflection creates highlights on objects making them appear shiny. By setting this color, you establish the color of the highlights.

Emissive—Used to select the 'glow' light color. This can be useful for displaying pre-lit models (where the light energy of the room is computed explicitly), or for displaying scientific data.

Opacity—Determines the opacity of the material. Opacity is the opposite of transparency. As you reduce the opacity value, the object becomes more transparent.

Shading—Displays the material's shading type. Shading types are controlled by a 'shader', which offers variations on how the surface responds to light. It may be either Blinn, Metal, Phong or constant shading.

Glossiness—Determines the model's highlighting. As you increase the glossiness, the highlight gets smaller and the material appears shinier.

Specular level—Determines the intensity of the specular light. You can set the specular level to a very high value to achieve very strong, tight highlights. This value is also known as 'shininess strength'.

Raytrace reflection—Determines the material's ability to reflect.

Index of refraction—Determines how much light is bent when travelling through a substance such as glass. The lower the number, the less the light is bent.

Double-sided—Applies the double-sided attribute to the selected material. Note that this option disables back-facing culling.

Render outlines—Used to render the thickness of outlines relative to the selected number.

OK—Applies and saves the settings, and then closes the dialog.

Cancel—Closes the dialog. Any changes made to the settings are lost.

Apply—Applies the settings.

Help—Opens the relevant Help topic.

Maps Tab

Material Properties dialog > Maps tab

Maps define the qualities that comprise a given material. The Maps tab displays all available texture maps for the selected material. It enables you to perform a number of procedures including selecting, modifying, and saving textures maps, removing textures from maps, opacity across individual channels, and applying texture blending.

If you click a map icon for a map that has a texture, the texture is displayed. You can also display information relating to the selected map including its location, size, and number of materials to which it is associated as shown in the example below.

Note that opacity can be applied across all channels (ambient, diffuse, specular, etc) via the Basic tab.

Copyright © Right Hemisphere 2006. All Rights Reserved.

Procedure

To display map information:

Click the map icon for which you want to display information and then click the Information  button.

Interface

 **Save As**—Saves the selected texture to a location and in the format of your choice.

 **Copy Image**—Copies the selected texture to the clipboard.

 **Information**—Displays information relating to the selected texture.

 **Zoom In**—Magnifies the selected texture map.

 **Zoom Out**—Reduces the magnification of the selected texture map.

Amount—Determines the texture map's strength. For example, the opacity of the Diffuse map or the 'bumpiness' of the Bump map.

Offset U—Determines the texture map's position on the surface along the U offset coordinate.

Offset V—Determines the texture map's position on the surface along the V offset coordinate.

Scale U—Determines the texture map's size along the U coordinate.

Scale V—Determines the texture map's size along the V coordinate.

Angle—Determines the texture map's angle of rotation on the surface.

U Tile—Tiles the texture map along the U coordinate.

V Tile—Tiles the texture map along the V coordinate.

More Properties (on page 284)—Opens the Additional Map Properties dialog and is used to modify various, additional map properties for the selected map.

Texture field—The image used as the texture for the selected map.

Browse—Used to browse for and select an image to use as a texture.

Remove—Removes the selected texture from the map.

OK—Applies and saves the settings, and then closes the dialog.

Cancel—Closes the dialog. Any changes made to the settings are lost.

Apply—Applies the settings.

Help—Opens the relevant Help topic.

Additional Map Properties Dialog

Material Properties dialog > Maps tab > More Properties

The Additional Map Properties dialog is used to modify further properties of the selected map.

Interface

3ds max style UV tiling—Uses 3ds max's offset values; positive U is to the right, positive V is up. 3ds max uses offset values that are pre-scaled. That is, they not multiplied by the tiling value.

Texture blending—Used to select the way in which texture map is blended with the base material.

- Modulate—Blends the texture and the base material together. Where the texture displays white, the color of the material is displayed. Where the texture displays black, the color of the texture is displayed. Where the texture displays gray, the texture and material colors are mixed together. For example, if the texture is gray and the material is red, a dark red color is displayed.
- Replace—Display the color of the texture only.

Map channel—Determines the UV channel to which the current material is assigned. This is helpful when materials have been assigned to UV channels via external applications.

Invert—Substitutes black with white and vice versa.

Use as color map—If the texture if colored, colors are displayed. Otherwise, the texture is displayed in grayscale. This option only applies to the diffuse map.

Treat as normal map—Treats the texture as if it is originally a normal map without any conversion taking place. Otherwise, the texture is converted to a normal map. This option only applies to the bump map.

Internal texture format—Used to select the pixel format (color depth) to apply to the texture. That is, the number of colors used to draw the scene. The format is in bits.

OK—Closes the dialog and saves the settings.

Cancel—Closes the dialog. Any changes made to the settings are lost.

Help—Opens the relevant Help topic.

Usage Tab

Material Properties dialog > Usage tab

The Usage tab displays the numbers, names, and faces of the objects to which the selected material is associated. It can also be used to access the Object Properties dialog where you can view and modify the selected object's properties.

Procedure

To open the Object Properties dialog from the Usage tab:

Click the **Object properties** link on the Usage tab.

Interface

Object Properties (on page 271)—Opens the Object Properties dialog and is used to modify the selected objects' properties.

Number—Displays the system generated numbers of the objects used by the material.

Name—Displays the names of the objects used by the material.

Copyright © Right Hemisphere 2006. All Rights Reserved.

Faces—Displays the number of faces of the objects used by the material.

OK—Closes the dialog.

Cancel—Closes the dialog.

Help—Opens the relevant Help topic.

Information Tab

Material Properties dialog > Information tab

The Information tab is used to view a summary of all information relating to the material's appearance including the lighting, texture mapping parameters, and texture file names.

The information is automatically updated when you modify the properties of either the material or any associated object.

Interface

OK—Closes the dialog.

Cancel—Closes the dialog.

Help—Opens the relevant Help topic.

Shader Tab

Material Properties dialog > Shader tab

The Shader tab displays the shader status and attributes and is used to edit vertex and pixel shaders. For each shader type, additional information is displayed in a hierarchical tree view including sliders for color values.

Please see the Edit Shader dialog (on page 162) for further information.

Cross Section Properties Dialog

Double-click cross section object in 3D viewport

The Cross Section Properties dialog is used to view and modify the cross section plane properties including the plane's color and opacity. Cross section planes let you exclude some of a scene's geometry to view or render only certain portions of the scene.

The plane can be moved (on page 90) to 'slice' though a 3D model along the cross section plane's x, y, and z axes and also by rotating the scene. Note that if you move the cross section plane, its original position can be restored via the Scene right-click menu (on page 318).

See also Transformation Tab (on page 281).

Procedure

To open the Cross Section Properties dialog:

Double-click the cross section object in the 3D viewport.

Appearance Tab

Cross Section Properties dialog > Appearance

The Appearance tab enables you to modify the cross section plane object including the cross section plane's color and opacity.

Interface

Cross section outline—Used to open the color selector and select a color in which to display the outline of the cross section plane.

Cross section plane—Used to open the color selector and select a color in which to display the cross section plane.

Opacity—Determines the opacity of the cross section plane.

Materials List

Scene Components panel > Materials

The Materials list displays a thumbnail list of all the materials that are associated with the current 3D file to allow easy identification of materials. It can be used to view materials, add materials to objects and maps, create, duplicate, delete, and rename materials, select materials and their associated objects, and modify the material and map properties.

You can view the number textures that have been applied to each material, the maps to which those textures have been applied, if the opacity had been modified, and if the UV offsets have been modified.

Copyright © Right Hemisphere 2006. All Rights Reserved.

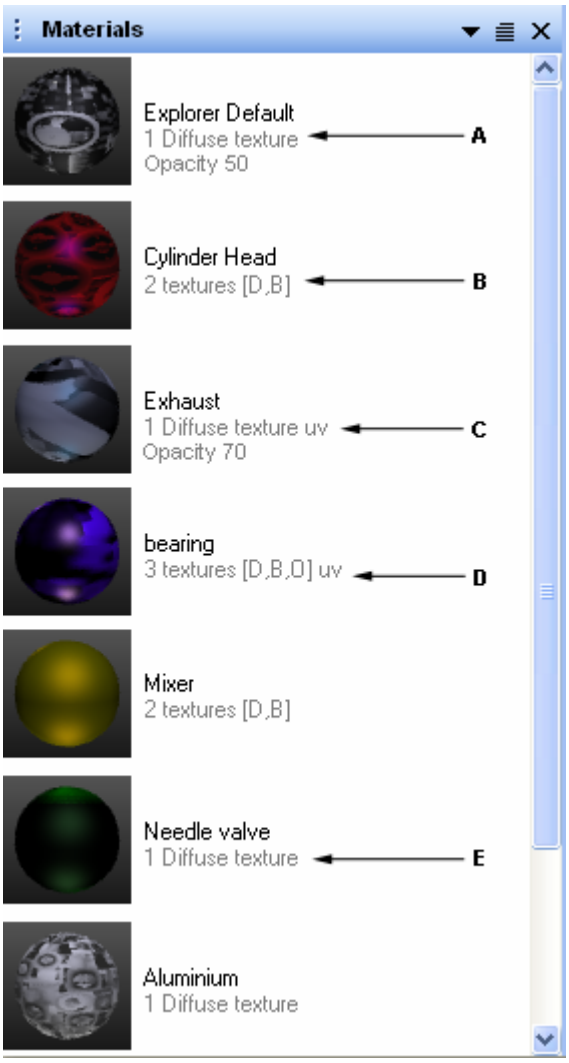

A: 1 texture (diffuse map), opacity 50%
B: 2 textures (diffuse and bump maps)
C: 1 texture (diffuse map), UV modification, opacity 70%
D: 3 textures (diffuse, bump, opacity maps), UV modification
E: 1 texture (diffuse map)

A right-click menu (on page 337) is available from where you can perform various material functions and keyboard shortcuts (on page 363) are available for the display of materials.

See Materials (on page 98) for further information and procedures.

Parts Panel

Scene Components panel > Parts

The Parts panel presents, and is used to control all the objects that are associated with the current 3D file. You can also draw callouts, export the Bill of Materials (BOM list), and modify the callout and BOM source settings.

A right-click menu (on page 339) is available from where you can perform a number of object-type functions including displaying and selecting objects, renaming callouts, and modifying the properties of the selected object.

The Parts panel displays all instanced objects (on page 84) and the number of times that they are used in the scene. However, it displays only the objects that are part of the selected BOM source.



Parts panel toolbar

Interface

Draw Callouts (on page 126)

Export BOM (on page 126)

Remove Callouts (on page 126)

Callout Settings (on page 128)

BOM Source (on page 130)

Animation Tree

Scene Components panel > Animation

The Animation tree displays a list of all the components that are associated with any animation in the current 3D file. A right-click context menu (on page 339) is also available from where you can perform a number of functions relating to animation.

Layers Panel

Scene Components panel > Layers

The Layers panel is used to create new layers and modify how the layers are displayed. Right-click menus (on page 341) are also available from where you can control the layers including locking, deleting and renaming layers.

Interface

Create (on page 139)—Creates a new layer. Any objects that are selected when this layer is created, are immediately added to the layer.

Unique (on page 139)—Displays one layer at a time. That is, all layers and objects that are not assigned to this layer are hidden.

Copyright © Right Hemisphere 2006. All Rights Reserved.

Select Objects Dialog

Scene Components panel > Select Objects button
Click in viewport with no selection > Keyboard F3

Multiple objects can be selected (on page 86) by name, size, polygon count, and vertex count using the Select Objects dialog.

The dialog comprises tabs and selection tools used to select objects automatically, and a list that displays all the objects of the current scene. This list can be used to manually select objects.

Note: You can also use the Edit Menu (on page 205) to open the Select Objects dialog.

Procedure

To open the Select Objects dialog, do one of the following:

- Click the Select Objects button  in the Scene Components panel.
- Click in the viewport, and with no selection press F3.

Interface

Name—Used to select objects by name.

- **Search for**—Selects objects using the letter/s contained in their names.
- **Case-sensitive**—Selects objects by name using upper and lower-case characters.

Size—Used to select objects by their size within their bounding box.

- **Level**—Selects objects by size from smallest to largest.
- **Invert selection**—Inverts the current selection.

Polygon Count—Used to select objects by the number of object faces.

- **Level**—Selects objects by the number of faces from least to most.
- **Invert selection**—Inverts the current selection.

Vertex Count—Used to select objects by the number of object vertices.

- **Level**—Selects objects by the number of vertices from least to most.
- **Invert selection**—Inverts the current selection.

Close—Closes the dialog.

Help—Opens the relevant Help topic.

Steps Panel

Menu bar > View > Controls and Toolbars > Steps
Right-click menu bar > Steps
Customize Layout dialog > Controls tab > Select Steps > OK

The Steps panel presents, and is used to control all user-defined steps; you can create and delete steps, and modify their properties.

The panel can be resized, moved, floated, docked, and closed (on page 345) similar to the functionality in most Windows applications. The options displayed on the panel differ depending on the selected render mode.

A right-click menu (on page 342) is available from where you can activate the views and edit their names. It also includes a toolbar that can be used to select, save, and delete themes.



Steps panel toolbar

Procedure

To toggle the display of the Steps panel, do one of the following:

- Choose **View > Controls and Toolbars > Steps** on the menu bar.
- Right-click the menu bar and click **Steps**.
- Open the Customize Layout dialog, select or clear the Steps check box in the Controls tab, and then click **OK**.

Interface


Create (on page 164)—Creates a step based on the current camera, render mode, and selected objects.


Delete (on page 164)—Deletes the selected step.


Options (on page 291)—Opens the Step Options dialog and is used to modify the global step settings.


Thumbnails—Displays a thumbnail view with the name of each file.


Play (on page 164)—Plays the step forward.


Stop (on page 164)—Stops the step from playing.

Step Options Dialog

Steps panel > Step Options

The Step Options dialog is used to modify the global step settings. That is, they are applied to all steps when steps are created.

Interface

Activation—Used to establish how the sequences link together when the step is played.

- **Enable fly-to camera**—Allows the camera to fly between each sequence.
- **Duration**—Determines the duration in seconds of the step.

Playback Control—Used to select the percentage playback speed.

Copyright © Right Hemisphere 2006. All Rights Reserved.

- **Speed**—Determines the percentage playback speed, that is, the speed the step plays as a percentage of real-time speed. For example, if the step is 10 seconds long and you enter 100%, it will take 10 seconds to play. However, if you enter 50%, the step will take 20 seconds to play.

OK—Closes the dialog. Any changes made to the settings are saved.

Cancel—Closes the dialog. Any changes made to the settings are lost.

Help—Opens the relevant Help topic.

Create Step Dialog

Steps panel > Create Step

The Create Step dialog is used to create steps including selecting and ordering the steps' sequences.

Interface

Name—Used to edit the step's name.

Description—Used to edit the step's description.

Available sequences—Lists all the available sequences within the file that can be added to the step.

Current sequences—Lists the sequences that are currently stored as part of the step.

Add—Adds the selected sequence to the step.

Remove—Removes the selected sequence from the step.

Up—Moves the selected sequence up one level in the sequence list.

Down—Moves the selected sequence down one level in the sequence list.

OK—Closes the dialog and creates the step.

Cancel—Closes the dialog without creating a step.

Help—Opens the relevant Help topic.

Step Properties Dialog

Steps panel > Right-click step > Step Properties

The Step Properties dialog is used to modify step properties including the step names and descriptions. It is also used to add to, and remove from the step, any animation sequence that is part of the current file.

Interface

Name—Used to edit the step's name.

Description—Used to edit the step's description. You can add metatdata tags, a metadata keyword, and metadata content to this description, which can be used to display the step's description and metatdata content (on page 166) in PDF documents using the PDF Publishing Module (on page 188).

Available sequences—Lists all the available sequences within the file that can be added to the step.

Current sequences—Lists the sequences that are currently stored as part of the step.

Add—Adds the selected sequence to the step.

Remove—Removes the selected sequence from the step.

Up—Moves the selected sequence up one level in the sequence list.

Down—Moves the selected sequence down one level in the sequence list.

OK—Closes the dialog. Any changes made to the settings are saved.

Cancel—Closes the dialog. Any changes made to the settings are lost.

Help—Opens the relevant Help topic.

Video Controls

Open video file



When you open a video file (on page 106), video controls are displayed beneath the viewport. These allow you to play, pause, stop, repeat, and mute the video. You can also zoom the video display, and raise and lower the volume.

See also Appendix D: Video File Formats (on page 502).

Interface

 **Play—**Plays the video forward.

 **Pause**—Pauses the video from playing.

 **Stop**—Stops the video from playing.

 **Repeat**—Sets the video to play continuously from beginning to end.

 **No Repeat**—Stops the video from playing continuously from beginning to end.

 **100% Zoom**—Displays the video at it's actual size in the viewport.

 **200% Zoom**—Displays the video at 200% magnification in the viewport.

 **Fit to Window**—Displays the video at it's best fit in the viewport.

Volume slider—Determines the level at which to play the video's sound.

 **Mute**—Mutes the sound while the video continues to play.

Frame slider—Determines the particular moment in the video to which to move.

Copyright © Right Hemisphere 2006. All Rights Reserved.

Toolbars

Menu bar > View > Controls and Toolbars
Right-click menu bar
Customize Layout dialog > Controls and Toolbars tab

Toolbars are sets of buttons to access the tools relating to standard and module functionality. They can be resized, moved, floated, docked, and closed (on page 345) similar to the functionality in most Windows applications. They are displayed as docked by default and have a Windows-type interface. Individual toolbars can be shown or hidden.

You can set each toolbar to display automatically (on page 207) if a file includes functionality that relates to that toolbar.

Note: Certain toolbars are only available if the related module (on page 15) is installed on your computer.

Interface

2D Editor—Used to select the color channels for 2D images.

3D Editor (on page 295)**—**Used to modify objects of the current scene, edit animation, and move markups.

CADTools (on page 297)—Used to perform a variety of actions including inverting faces, removing small parts, and exploding objects.

Display (on page 298)—Used to select render modes with which to view files, and to show certain scene elements such as the scene bounding box and lights and cameras.

Illustration (on page 299)—Used to render images in either raster or vector form, and include markups and callouts.

Lights (on page 299)—Used to apply lighting to the current scene.

Measurements (on page 300)—Used to measure the distance or angle between two elements in a scene, or within a single element.

Navigation (on page 301)—Used to view scenes from various angles and scales.

Primitives (on page 303)—Used to add preset 3D objects to the scene, and to apply modifiers to selected 3D objects.

Realight (on page 157)—Used to simulate global illumination utilizing the ambient occlusion technique.

Real Time Shader (on page 306)—Used to render objects using vertex and pixel shaders.

Rendering (on page 306)—Used to select a renderer, set the renderer properties, and to specify the destination to which to render or save the 2D file.

Standard (on page 306)—Used to manage files, create slide shows, and to change the Explorer bar view.

Surfaces (on page 307)—Used to select and display surfaces for the scene.

Teamwork (on page 308)—A set of markup tools that is used to markup 2D images and 3D models.

UV Mapping (on page 172)—Used to apply UV mapping coordinates to selected objects and to pack the UV coordinates.

2D Editor Toolbar

Menu bar > View > Controls and Toolbars > 2D Editor
Right-click menu bar > 2D Editor
Customize Layout dialog > Select 2D Editor check box > Apply



The 2D Editor toolbar is used to display and hide the color channels. This is helpful when you want to remove certain parts of an image. The red, green, and blue channels are always active by default. The Alpha Channel button only becomes active if an alpha channel is present within the file.

All images also have three channels: one red, one green, and one blue. Each channel is a representation of the image in a single hue. The pixels in the red channel are all some value of red between 0.0 (no red) and 1.0 (full red). The image you see when you import a graphic is the combination of the three channels into one color composite.

While RGB values represent color, the alpha channel is an additional part of the image that usually describes transparency. 32-bit graphics systems contain four channels - three 8-bit channels for red, green, and blue (RGB) and one 8-bit alpha channel.

Hint: If you do not want an image to display the alpha channel, go to the 2D View tab (on page 224) in the Options dialog and select None in the Grid Size field.

Note: The alpha channel may not be supported by certain file formats and may be lost when a file is exported.

Interface

 **Red Channel**—Displays and hides the red color channel.

 **Green Channel**—Displays and hides the green color channel.

 **Blue Channel**—Displays and hides the blue color channel.

 **Alpha Channel**—Displays and hides the alpha color channel.

3D Editor Toolbar

Menu bar > View > Toolbars > 3D Editor
Right-click menu bar > 3D Editor
Customize Layout dialog > Select 3D Editor check box > Apply



The 3D Editor toolbar is used to transform (move, rotate, and scale) selected objects within the current scene. You can also move and rotate the scene's pivot point. Animation can be edited using the Edit keyframe animation tool in conjunction with the other 3D Editor tools. You can also use the toolbar in conjunction with the Object Position controls (on page 266) to transform objects and object pivot points along their individual axes.

The toolbar can be resized, moved, floated, docked, and closed (on page 345) similar to the functionality in most Windows applications.

Copyright © Right Hemisphere 2006. All Rights Reserved.

Various rules (on page 90), determining movement, rotation, scaling, and moving pivot points, govern the use of this toolbar.

Interface

 **Undo—**Displays a list of the last 3D Editor actions performed on the current file, up to a maximum of 10. After you perform an undo action, the next action is displayed.

 **Redo—**Displays a list of the last undo actions performed on the current file, up to a maximum of 10. After you perform a redo action, the next action is displayed.

 **Rectangular Selection** (on page 86)

 **Circular Selection** (on page 86)

 **Lasso Selection** (on page 86)

 **Rectangular Center Selection** (on page 86)

 **Window/Crossing Selection** (on page 86)

 **Select** (on page 86)

 **Move** (on page 92)

 **Rotate** (on page 92)

 **Scale** (on page 93)

 **Move Pivot Point** (on page 95)

 **Rotate Pivot Point** (on page 95)

 **X Axis** (on page 90)

 **Y Axis** (on page 90)

 **Z Axis** (on page 90)

 **Local** (on page 77)

 **Parent** (on page 77)

World (on page 77)

Screen (on page 77)

Edit Keyframes (on page 101)

CADTools Toolbar

Menu bar > View > Controls and Toolbars > CADTools
Right-click menu bar > CADTools



The CADTools toolbar is used to perform a number of actions on selected objects or on the entire scene.

Interface

Invert Faces (on page 109)

Invert Normals (on page 109)

Invert Faces and Normals (on page 109)

Unify Normals (on page 110)

Remove Internal Parts (on page 111)

Remove Small Parts (on page 112)

- **Settings** (on page 113)

Separate Meshes (on page 113)

Join Equal Points (on page 114)

- **Settings** (on page 114)

Reduce Model (on page 116)

Convert to Double-Sided (on page 122)

Explode Objects (on page 122)

Copyright © Right Hemisphere 2006. All Rights Reserved.

- **Settings** (on page 123)

Color Objects (on page 124)

- **Settings** (on page 125)

Display Toolbar

Menu bar > View > Controls and Toolbars > Display
Right-click menu bar > Display
Customize Layout dialog > Select Display check box > Apply



The Display menu is used to apply render modes (on page 68) to the scene, and to control the grid.

See also Display menu (on page 208).

Interface

Transparent Bounding Box (on page 68)

Solid (on page 68)

Transparent (on page 68)

Solid Wireframe (on page 68)

Line Illustration (on page 68)

Solid Outline (on page 68)

Shaded Illustration (on page 68)

Bounding Box (on page 68)

Transparent Bounding Box Outline (on page 68)

Transparent Wireframe (on page 68)

Wireframe (on page 68)

Shaded Wireframe (on page 68)

 **Hidden Wireframe** (on page 68)

 **Vertices** (on page 68)

 **Shaded Vertices** (on page 68)

 **Grid** (on page 81)

Illustration Toolbar

Menu bar > View > Controls and Toolbars > Illustration
Right-click menu bar > Illustration



The Illustration toolbar is used to render images in either raster or vector form.

Interface

 **Raster Illustration** (on page 134)

- **To Viewport**—Renders the scene directly to the active viewport, or to a separate window depending on your renderer output settings (on page 215).
- **To File**—Renders the scene, displays the illustration in the viewport, and saves it to file.

 **Vector Illustration** (on page 135)

Lights Toolbar

Menu bar > View > Controls and Toolbars > Lights
Right-click menu bar > Lights
Customize Layout dialog > Select Lights check box > Apply



The Lights toolbar can be used to apply lighting to scenes (on page 70) to give a more realistic appearance to the current scene.

See also Lights Menu (on page 210).

Interface

 **Lights from File** (on page 210)

 **White Lights** (on page 210)

Copyright © Right Hemisphere 2006. All Rights Reserved.

 **Day Light** (on page 210)

 **Hard Lights** (on page 210)

 **Colored Lights Red/Green** (on page 210)

 **Colored Lights Blue/Green** (on page 210)

 **Blue Lights** (on page 210)

 **Marsiano Lights** (on page 210)

 **Cube Lights** (on page 210)

 **CAD Optimized Lights** (on page 210)

 **Single Light from Eye** (on page 210)

 **All Lights Off** (on page 210)

 **Specular Lights** (on page 210)

 **Increase Brightness** (on page 210)

 **Decrease Brightness** (on page 210)

 **Restore Brightness** (on page 210)

Measurements Toolbar

Menu bar > View > Controls and Toolbars > Measurements
Right-click menu bar > Measurements
Customize Layout dialog > Select Measurements check box > Apply



The Measurements toolbar is used to measure the distance or angle between two elements in a scene, or within a single element, and modify the measurement properties.

Interface

 **Distance** (on page 145)

 **Angle** (on page 145)

Settings (on page 147)

Navigation Toolbar

Menu bar > View > Controls and Toolbars > Navigation
Right-click menu bar > Navigation
Customize Layout dialog > Select Navigation check box > Apply



Use the Navigation toolbar to view images and scenes from various angles and scales, including rotating models and rolling the camera.

Interface

Rotate (on page 63)

Scale (on page 64)

Pan (on page 62)

Zoom In (on page 65)

Zoom Out (on page 65)

Zoom Window (on page 65)

Best Fit (on page 65)

Standard View (on page 65)

PMI Toolbar

Menu bar > View > Controls and Toolbars > PMI
Right-click menu bar > PMI
Customize Layout dialog > Select PMI check box > Apply



The PMI toolbar is used to toggle the view of PMI markups, display any metadata that is present in the file, and establish the default PMI markup settings.

Note: You must have the PMI module (on page 194) installed on your computer to gain access to this toolbar.

Copyright © Right Hemisphere 2006. All Rights Reserved.

Interface

 **Text—**Displays basic line and vector markups.

 **Rich Text—**Displays special formatted text markups.

 **GDT—**Displays measurements, tolerances, material data, and reference datum.

 **Dimensions—**Displays detailed dimension line markups.

 **Datum—**Displays special reference points or planes for measurement markups sometimes shown as a single letter enclosed within a box.

 **Metadata** (on page 302)—Opens the Metadata dialog and displays attributes and properties that are associated with a part when it was created.

 **Show/Hide Metadata**—Displays attributes and properties that were associated with parts when they were created.

 **Settings** (on page 303)—Opens the PMI Settings dialog and is used to modify the settings for PMI markups.

Metadata Dialog

PMI toolbar > Metadata

Using the Metadata dialog, you can view the attributes and properties that are associated with parts when they are created, including surface tolerance data and title block information.

Procedure

To open the Metadata dialog:

Click Metadata  on the PMI toolbar.

Interface

File Information—Displays information relating to the file current.

Parts Information—Displays all the part names for all parts with the current file. Note that if you double-click the part in this list, the part details are displayed.

- **Part**—The part name and number.

Parts Details—Displays details for the part selected in the Parts Information list.

OK—Closes the dialog.

Help—Opens the relevant Help topic.

PMI Settings Dialog

PMI toolbar > Settings

Using the PMI Settings dialog, you can modify the settings for PMI markups. The settings are saved to your computer registry for future use. Any changes you make to the settings are applied to all PMI markups that are subsequently viewed.

Procedures

To open the PMI Settings dialog:

Click Settings  on the PMI toolbar.

To modify the PMI markup settings:

1. Open a 3D file (on page 42).
2. Click **Settings**  on the PMI toolbar.
3. Make the selections you require.
4. Click **OK**.

Interface

Display—Used to specify how the PMI markup data is displayed.

- **Always On Top**—Draws the vectors and vector lines on top of and through all the objects in the scene even if the markup is behind the object or obscured by the geometry.
- **Wireframe arrows**—Renders all arrows as line segments instead of standard 'filled' arrows. Note that this option becomes inactive if the current file does not have wireframe arrows.

Colors—Used to edit and change colors of the PMI markups.

- **Leaders**—Used to open the color selector and select the color of the markup leaders.
- **Text**—Used to open the color selector and select the vector text color.

OK—Closes the dialog and applies the settings. Any changes made to the settings are saved.

Cancel—Closes the dialog. Any changes made to the settings are lost.

Help—Opens the relevant Help topic.

Primitives and Modifiers Toolbar

Menu bar > View > Controls and Toolbars > Primitives
Right-click menu bar > Primitives
Customize Layout dialog > Select Primitives check box > Apply



The Primitives and Modifiers Toolbar is used to add primitives (preset 3D objects) to the scene. There are myriad types of primitives including lines, spheres, boxes, stairs, gears, and archways.

Copyright © Right Hemisphere 2006. All Rights Reserved.

It is also used to apply modifiers to any 3D object that you select in the scene. Modifiers provide many different ways to modify existing objects, while keeping file size to a minimum. You can also adjust the properties of the modifiers (on page 273) at any time. For example, normally you want the center of the Inflate modifier to be a point somewhere in the midst of the object, and radius to be the distance of the furthest vertex from center. However, you can change the center anchor of the Inflate modifier object to achieve different effects.

Interface



Create Primitive (on page 155)

- **Arc**—Adds a arc to the scene; a curved bow-like segmented line in a 2D plane.
- **Archway**—Adds an archway to the scene; a rectangular object with or without rounded corners inside and out.
- **Box**—Adds a box to the scene; a square six-sided 3D object.
- **Capsule**—Adds a capsule to the scene; a long spherical type 3D object.
- **Circle**—Adds a circle to the scene; a curved closed segmented arc in a 2D plane.
- **Cone**—Adds a cone to the scene; a 3D object with a round base that extends to a point.
- **Cylinder**—Adds a cylinder to the scene; a 3D object with a round base that extends up or down, and may, or may not, be tapered.
- **Disk**—Adds a disk to the scene; a circular 2D plane object made up of faces.
- **Donut**—Adds a donut to the scene; a circular 2D plane object with a hole in its center made up of faces.
- **Frame**—Adds a frame to the scene; a rectangular object that is similar to a picture frame (without a back).
- **Gear**—Adds a gear to the scene; a cylinder type object with teeth or notches on the inside or outside.
- **Gengon**—Adds a gengon to the scene; a 3D, round cylinder type object.
- **Geosphere**—Adds a geosphere to the scene; a ball like 3D object made up of triangle faces.
- **Helix**—Adds a helix to the scene; a 3D spiral object, similar to a corkscrew.
- **Plane**—Adds a plane to the scene; a rectangular object divided up into length and width segments.
- **Polygon**—Adds a polygon to the scene; a closed series of line segments in a 2D plane.
- **Polyhedron**—Adds a polyhedron to the scene; a ball-like 3D object made up of triangle faces.
- **Prism**—Adds a prism to the scene; a 3-sided triangular object.
- **Pyramid**—Adds a pyramid to the scene; a 3D object with a square base that extends to a point.
- **Rectangle**—Adds a rectangle to the scene; a 4-sided box with or without rounded corners.
- **Rounded Box**—Adds a rounded box to the scene; a square six-sided 3D object with rounded edges.
- **Rounded Frame**—Adds a rounded frame to the scene; similar to a Frame, but it can have rounded inner and outer corners.
- **Sphere**—Adds a sphere to the scene; a 3D round ball-like object.
- **Spindle**—Adds a spindle to the scene; a 3D object with a round base that extends up or down and may or may not be tapered.
- **Spiral Stairway**—Adds spiral stairs to the scene. A spiral stair is composed of the following elements: the steps themselves; handrails; posts, which extend from the undersides of the rail segments to the step tops; case, which extends the sides of the stairs to the ground; and the central pole.
- **Spring**—Adds a spring to the scene; a spiral-type 3D object.

- **Stairway**—Adds a stairway to the scene. A stairway is composed of the following elements: the steps themselves; the handrails; the posts, which extend from each step top to the rails; and the case, which extends the sides of the stairway to the ground.
- **Star**—Adds a start to the scene; a circular 2D object with pointed faces around its outside.
- **Stick**—Adds a stick to the scene; a line type object that will deviate in different directions for each segment.
- **Teapot**—Adds a teapot to the scene; the classic 3D model. It was one of the first 3D models created, and was typically used for testing the speed of older modeling systems.
- **Torus**—Adds a torus to the scene; a spiral-type 3D object.
- **Tube**—Adds a tube to the scene; a 3D object with a round base that extends up or down, and may, or may not, be tapered.

**Create Modifier** (on page 155)

- **Axis Swap**—Swaps the selected 3D objects' axis. For example, if an object points X values can be swapped with the points Z values. This modifier is especially useful when loading meshes from other sources. For example, .x files.
- **Bend**—Bends the selected 3D objects by a specified amount. You should ensure that the object being bent has enough vertices to make a smooth bend.
- **Inflate**—Modifies the selected 3D objects' vertices using a given sphere to inflate or deflate the object's appearance.
- **Mirror**—Mirrors the selected 3D objects. Objects are mirrored at their base location.
- **Noise**—Randomly moves the vertices of the selected 3D objects.
- **Ripple**—Ripples the selected sub-objects.
- **Skew**—Pushes one end of the selected 3D objects' vertices in one direction while leaving the other end stationary.
- **Stretch**—Stretches or squashes the selected 3D objects. The modifier axis and direction define an axis line in space. The object is scaled along it (stretch) and transverse to it (squash).
- **Taper**—Tapers the selected 3D objects by making it smaller or larger on a specified axis.
- **Twist**—Twists the selected 3D objects a specified amount.
- **Wave**—Applies a wave to the selected 3D object' vertices.

Realight Toolbar

Menu bar > View > Controls and Toolbars > Realight
Right-click menu bar > Realight
Customize Layout dialog > Select Realight check box > Apply



The Realight toolbar comprises a single button with which you can simulate global illumination within a scene via the Realight dialog (on page 158).

Interface

**Realight** (on page 157)

Copyright © Right Hemisphere 2006. All Rights Reserved.

Render Toolbar

Menu bar > View > Controls and Toolbars > Rendering
Right-click menu bar > Render
Customize Layout dialog > Select Render check box > Apply

The Render toolbar is used to render scenes to the viewport or to file, select a renderer, and modify the renderer properties. Properties for the display renderer (on page 209) graphics cards installed on your computer properties for the can be set using the Render tab (on page 233) on the Options dialog.

See Render menu (on page 212) for further information.

Interface

 **Render** (on page 212)

 **Render To File** (on page 213)

 **Auto Fly-Around** (on page 214)

Raytracer (on page 212)

Software Z-Buffer (on page 212)

 **Renderer Properties** (on page 215)

Shader Toolbar

Menu bar > View > Controls and Toolbars > Shader
Right-click menu bar > Shader
Customize Layout dialog > Select Shader check box > Apply



The Shader toolbar is used to edit vertex and pixel shaders.

Interface

 **Shader** (on page 161)

Standard Toolbar

Menu bar > View > Controls and Toolbars > Standard
Right-click menu bar > Standard
Customize Layout dialog > Select Standard check box > Apply



The Standard toolbar is used to open, export and print files, go to the previous or next file displayed in the File list, stop the application opening the previous or next file, create a slide show, and display the different Explorer bar views.

Interface

 **New Empty Scene** (on page 41)

 **Open a File** (on page 42)

 **Save As** (on page 56)

 **Print** (on page 199)

 **Previous File**

 **Next File**

 **Slide Show** (on page 160)

 **Stop** (on page 42)

 **Search** (on page 245)

 **Folders** (on page 241)

 **History** (on page 244)

 **Favorites** (on page 242)

 **Full-Screen Mode** (on page 76)

Surfaces Toolbar

Menu bar > View > Controls and Toolbars > Surfaces
Right-click menu bar > Surfaces
Customize Layout dialog > Select Surfaces check box > Apply



The Surfaces toolbar is used to control the various surfaces within the scene such as the default material, textures, and smoothing.

Interface

 **Use Default Material—**Displays and hides the default material on all objects. This is helpful when reviewing files that have very light or dark materials.

Copyright © Right Hemisphere 2006. All Rights Reserved.

Use Existing Smoothing—Displays and hides the existing smoothing information from the current file.

Show Transparency—Displays and hides transparency in those materials that are transparent.

Show Textures—Displays and hides textures on objects in Solid render mode. The textures are displayed in the most realistic and detailed representation for the scene.

Teamwork Toolbar

Menu bar > View > Controls and Toolbars > Teamwork
Right-click menu bar > Teamwork
Customize Layout dialog > Select Teamwork check box > Apply



The Teamwork toolbar comprises a number of buttons with which you can perform a number of markup actions on the scene.

Interface

Note Normal (on page 167)

Note Point (on page 167)

Note Arrow (on page 167)

Note Circle (on page 167)

Note Settings (on page 167)

URL Without Leader (on page 167)

URL With Leader (on page 167)

URL Settings (on page 167)

Line (on page 167)

Polyline (on page 167)

Arc (on page 167)

 **Line Settings** (on page 167)

 **Circle** (on page 167)

 **Rectangle** (on page 167)

 **Shape Settings** (on page 167)

 **Add Leaderline** (on page 167)

 **Show/Hide Markups** (on page 168)

 **Delete Markup** (on page 168)

UV Mapping Toolbar

Menu bar > View > Controls and Toolbars > UV Mapping
Right-click menu bar > UV Mapping
Customize Layout dialog > Select UV Mapping check box > Apply



The UV Mapping toolbar comprises a number of buttons with which you can perform a number of actions on selected objects or on the entire scene.

Interface

 **Map and Pack** (on page 172)

 **Pack** (on page 172)

 **Settings** (on page 172)

Copyright © Right Hemisphere 2006. All Rights Reserved.

File List

Menu bar > View > Explorer Bar > Folders
Select folder in Folders panel
Select folder in History/Favorites list
Search panel > Perform search

The File list can be used to perform a number of actions including displaying the contents of the folder one level up from the current folder, generating thumbnails, and arranging and sorting the list.

Note: We discuss generating thumbnails in Generate Thumbnails Dialog (on page 220).

You can also create folders (on page 241), merge files (on page 54), refine searches (on page 53), and drag textures and shaders (on page 98) onto models. Additionally, many folder and file functions use standard Windows conventions, and as such are not described in detail. For example, cutting, pasting, and deleting.

A number of tabs are available in the File list:

- The Local tab is always shown when the File list is visible. It displays all files and folders contained within the current folder (on page 241).
- Whenever you perform a search (on page 50), a 'Search' tab is displayed listing all the files that match the search criteria. Search tabs can be used to refine your search further.
- The My 3D Models, Materials, Textures, and Shaders tabs are all created when you install Deep Exploration. They display all the folders and files contained within the 'My 3D Models' folder and all the available material, texture, and shader files respectively.
- The Gateway tabs are displayed if the Gateway Module (on page **Error! Bookmark not defined.**) is installed on your computer. Note that if you perform a search via Gateway, a 'Search' tab is also displayed that lists all the files that match the search criteria.

The File list tabs can be displayed in differing views and sorted in ascending or descending order, and you can change the way items are arranged, similar to the functionality in most Windows applications. For example, when tabs are displayed in a detailed view, the columns can be sorted in ascending or descending order and you can drag the columns to other locations within the tab. Note that a colored vertical line is displayed when a valid column insertion point becomes available.

All the tabs can be made visible and hidden as required. Files and folders can be dragged between the Folders panel (on page 241) and the File list to move them to other folders.

The File list includes a toolbar (on page 311) that can be used to display files with different layouts, and to cut, copy, paste, move, rename, delete, and search for files and folders. Context-sensitive right-click menus (on page 324) are available from where you can open selected drives and folders in separate windows, determine how file information is displayed, enter descriptions for individual files, arrange the icons, and add selected files to the Favorites list.

All your File list settings are automatically preserved between sessions.

Note: When you open an archive file (on page 630), the contents are automatically displayed in the File list.

Procedures

To show and hide the File list tabs:

Click **View > Explorer Bar** on the menu bar, and then click the tab you want to to show or hide.

Note: You can also click Close on the tab you want to hide.

To move up one level:

Click **Up One Level** . The File list displays the contents of the higher level folder.

To arrange the tabs:

1. Do one of the following:
   - Choose **View** from the menu bar and click the arrangement type you want. For example, click Large Icons to view the files and folder as large icons in the File list.
   - Click the button for the arrangement type you want. For example, click the Small Icons button to view the files and folder as small icons in the File list.

To sort the columns:

1. Do one of the following:
   - Choose **View > Sort File List** (on page 206) from the menu bar and click the sort type you require. For example, click By Size to sort the list by the file size.
   - Click a column name for the column on which you want to sort. Depending on the order in which they were originally, the list is sorted in ascending or descending order. A small triangle on the column name indicates the order type.
2. Choose **View > Sort File List** from the menu bar and click **3D Files at Top** if you want to display all 3D files at the beginning of the list.
3. Choose **View > Sort File List** from the menu bar and click **Group View** if you want to groups the files by file type.

   Note: The 3D Files at Top and Group View commands do not change the sort order when viewing the list in the List view.

To go to the previous file:

Click **Previous File**  on the Standard toolbar.

To go to the next file:

Click **Next File**  on the Standard toolbar.

To close a search tab:

Click **Close Search** on the tab you want to close.

File List Toolbar

Menu bar > View > Explorer Bar > Folders
Select folder in Folders panel
Search panel > Perform search



The File list includes a toolbar that can be used to perform a number of functions relating to the display of files and folders including arranging the display, create new folders, generate thumbnails, and search for files and folders.

Copyright © Right Hemisphere 2006. All Rights Reserved.

You can also cut, copy, paste, move, and search for files and folders, and rename and delete selected files, and go to the folder one level up form the current folder.

Note: A number of the File list functions are available from the Edit (on page 205) and View (on page 206) menus.

Interface

 **Up One Level**—Moves to the folder one level above the active folder.

 **Create Folder—**Creates a new folder within the selected drive or folder.

 **Thumbnails**—Displays a thumbnail view with the name of each file.

 **Tiles—**Displays a tiled view with the name, format, and size of each file.

 **Large Icons—**Displays a large icon and file name for each file.

 **Small Icons—**Displays a small icon and file name for each file.

 **List—**Displays the file names and icons arranged in columns.

 **Details—**Displays detailed information for each file.

 **Generate Thumbnails** (on page 220)—Used to create or update thumbnails in the thumbnails cache, for all files in the current folder.

 **Cut—**Removes the selected file or folder and its contents, from the File list and places it on the clipboard. You can then move it to another location.

 **Copy—**Copies the selected items to the clipboard.

 **Paste—**Inserts the files you have cut or copied into the selected location.

 **Move To Folder**—Used to move the selected folder and files to another folder.

 **Copy To Folder—**Used to copy the selected folder and files to another folder.

 **Rename File—**Used to rename the selected file.

 **Delete File—**Deletes the selected file.

Search field—Used to search through the File list for files and folders.

 **Close**—Closes the active tab.

My 3D Models Tab

Menu bar > View > Explorer Bar > My 3D Models

The 3D Models folder is automatically created when you install Deep Exploration. The 3D Models tab displays all the files and folders files that are contained within this folder.

Various right-click menus (on page 324) are available in the File list tabs from where you can perform a variety of functions.

Materials Tab

Menu bar > View > Explorer Bar > Materials

The Materials folder is automatically created when you install Deep Exploration. The Materials tab displays all the sample material files that are delivered with the application and contained within this folder.

Various right-click menus (on page 324) are available in the File list tabs from where you can perform a variety of functions.

Downloads Tab

Menu bar > View > Explorer Bar > Downloads

The Downloads folder is automatically created when you install Deep Exploration. The Downloads tab displays all the sample files that are delivered with the application and contained within this folder.

Various right-click menus (on page 324) are available in the File list tabs from where you can perform a variety of functions.

Gateway Tabs

Menu bar > View > Explorer Bar > Gateway

The Gateway tabs are displayed in the File list (on page 310) if the Gateway Module (on page **Error! Bookmark not defined.**) is installed on your computer. They are used to view all derivatives, associated files, and subgroups (.rh files) of items selected in the Gateway tree (on page 249), and also assets located by performing a Gateway search (on page 182).

Note that any assets that are located during a search are displayed in a Search tab in the File list.

Viewport Display

- Whenever you click an item in a Gateway tab, it is downloaded (on page 180) to the temporary files folder automatically, and displayed in the viewport.
- Items must be downloaded before they can be displayed in the Deep Exploration viewport via clicking that item in the Gateway tree. All the derivatives, associated files, and subgroups that correspond to that item are then also displayed in the Gateway tabs.

Copyright © Right Hemisphere 2006. All Rights Reserved.

Interface

Derivatives tab—Displays all the derivatives that correspond to the item selected in the Gateway tree.

Associated files tab—Displays all the associated files that correspond to the item selected in the Gateway tree.

Subgroup tab—Displays all the folder and file subsets and subgroups that correspond to the top-level folder or file in the Gateway tree.

Search Tabs

Menu bar > View > Explorer Bar > Search > Local file search
Menu bar > View > Explorer Bar > Search > Web search
Menu bar > View > Explorer Bar > Gateway > Search tab

Individual 'Search' tabs are automatically displayed in the File list every time you perform a search. The tab displays all the files that match the search criteria. These tabs can be used to refine your search further, and they can be closed as required.

The tabs can be used to perform various functions depending on the type of search you are performing:

- A local file search (on page 50).
- A Web search (on page 50).
- A Gateway search.

Various right-click menus (on page 324) are available in the File list tabs from where you can perform a variety of functions.

Shaders Tab

Menu bar > View > Explorer Bar > Shaders

The Shaders folder is automatically created when you install Deep Exploration. The Shaders tab displays all the sample shader files that are delivered with the application and any additional shaders that may by saved to this folder.

Using this tab, you can drag shaders onto models, after which, the shader can be edited (on page 161).

Various right-click menus (on page 324) are available in the File list tabs from where you can perform a variety of functions.

Textures Tab

Menu bar > View > Explorer Bar > Textures

The Textures folder is automatically created when you install Deep Exploration. The Textures tab displays all the sample texture files that are delivered with the application and contained within this folder.

Various right-click menus (on page 324) are available in the File list tabs from where you can perform a variety of functions.

Right-Click Menus

Deep Exploration uses several different types of right-click menu that provide commands to manage and manipulate your files and assets.

The menus displayed may vary depending on the graphics card installed in your computer. Additionally, many menus use standard Windows conventions, and as such are not described in detail.

Note: Commands relating to external applications installed on your computer are not described.

2D Viewport Menus

Right-click 2D viewport

A 2D menu appears when you right-click in the 2D viewport. The options differ depending on the current file format.

Interface

2D Tools (on page 221)—Used to control a number of image settings including modifying the image size and rotating the image.

Pages—Used to view a cubemap file using one of the six images of which the file is comprised. These images represent what you would see from a certain location if you were to look forward, left, right, backward, up, and down. This option is only displayed with cubemap files. For example, .dds file.

- **posx**—Displays the image as viewed from the left.
- **negx**—Displays the image as viewed from the right.
- **posy**—Displays the image as viewed from the bottom.
- **negy**—Displays the image as viewed from the top.
- **posz**—Displays the image as viewed from the front.
- **negz**—Displays the image as viewed from the back.

Zoom In (on page 65)**—**Zooms in on the image.

Zoom Out (on page 65)**—**Zooms out from the image.

Standard View (on page 65)**—**Zooms the image to its actual size.

Best Fit (on page 65)**—**Zooms the image to its best fit in the viewport.

Options (on page 224)**—**Opens the Options dialog and is used to configure your graphics files settings including colors and thumbnails.

3D Viewport Menus

Right-click 3D viewport label
Right-click scene no selection
Right-click one or more objects

Various context-sensitive right-click menus are available when you right-click in the 3D viewport. The menus that appear depend on the location of your cursor.

Copyright © Right Hemisphere 2006. All Rights Reserved.

Interface

Viewport menu—Appears when you right-click over the viewport label located in the top, left of the viewport. It includes all preset view (on page 73), user-defined view (on page 74), and render mode (on page 68) commands. It also includes all of the show/hide commands that can be set for individual viewports (on page 61).

Scene menu—Appears when you right-click over the scene with nothing selected. It includes various commands that relate specifically to the scene. For example, the camera motion (on page 77) and scene backgrounds.

Object menu—Appears when you right-click over the scene with one or more objects selected. It includes various commands that relate specifically to objects. For example, selecting (on page 86) and grouping objects.

Tools Right-Click Menu—Appears when you right-click over the scene with nothing selected or with one or more objects selected.

Right-Click Selection Menu—A selection menu is displayed if you press CTRL, right-click and then drag in the 3D viewport.

Viewport Right-Click Menus

Right-click 3D viewport label

The viewport right-click menu contains commands for controlling the display of the active viewports (on page 61): preset views (on page 73), user-defined views (on page 74), render modes (on page 68), viewport show/hide elements. It appears when you right-click over the viewport label in the top, left of the viewport.

These commands are local and are overridden by the menu bar commands (on page 199). For example, if you display a viewport in the Wireframe render mode and another viewport in the Line Illustration mode, selecting the Solid render mode from the Display menu displays all viewports in Solid mode.

Interface

Top (on page 73)—Displays the scene orthographically from the top of the scene in the selected viewport.

Bottom (on page 73)—Displays the scene orthographically from the bottom of the scene in the selected viewport.

Front (on page 73)—Displays the scene orthographically from the front of the scene in the selected viewport.

Aft (Back) (on page 73)—Displays the scene orthographically from the back of the scene in the selected viewport.

Right (on page 73)—Displays the scene orthographically from the right of the scene in the selected viewport.

Left (on page 73)—Displays the scene orthographically from the left of the scene in the selected viewport.

User (on page 73)—The default user view. This command is only displayed when the camera is not at a defined view. That is, as soon as you rotate the model, the defined view is changed and this is the view that is seen.

Perspective (on page 73)—Applies perspective to the current view. Otherwise, the default parallel view is used.

Model View (on page 317)—Used to select a model view in which to display the scene in the selected viewport.

Views (on page 317)**—**Used to select to view the scene using user-defined, isometric, dimetric, or trimetric preset views. This menu is also used to set and remove the default file type view.

Transparent Bounding Box—Displays each object as a transparent bounding box.

Solid—Displays each object as solid.

Transparent—Displays each object as transparent.

Solid Wireframe—Displays each object as solid with a wireframe.

Line Illustration—Displays each object as solid, based on the 'background top' color, with outlines. That is, a solid rendering with outlines overlaid on top.

Solid Outline—Displays each object as solid with outlines. That is, only silhouette and crease edges are shown.

Shaded Illustration—Displays each object as solid with outlines with material color overrides. That is, the objects' material colors can be replaced or blended with other colors using the Display Settings panel (on page 260).

Other—Used to select additional render modes (on page 68).

- **Bounding Box—**Displays each object as a bounding box.
- **Transparent Bounding Box Outline—**Displays each object as a transparent bounding box with outlines along the edges. Each bounding box is axis-aligned (AABB) instead of the object's actual geometry. An AABB is a box with all its edges parallel to the X,Y, and Z axes, and is the smallest box that can completely contain the given object.
- **Transparent Wireframe—**Displays each object as transparent with a wireframe.
- **Wireframe—**Displays each object as a wireframe.
- **Shaded Wireframe—**Displays each object as a shaded wireframe.
- **Hidden Wireframe—**Displays or hides the wireframe view without any visible hidden surfaces. A similar effect can be obtained using Solid Outline mode with the outline angle set to '0'.
- **Vertices—**Displays all objects as vertices.
- **Shaded Vertices—**Displays all objects as shaded vertices. The shading colors are based on the object's material colors.

Model Views Menu

Right-click 3D viewport label > Model Views

The Model Views menu is used to view scenes through any model views (on page 75) that you have created.

When you select a model view:

- The active viewport is set to the associated camera and render mode.
- The objects in the associated layer are made visible.
- All objects that are not associated with the view become invisible.

Copyright © Right Hemisphere 2006. All Rights Reserved.

Views Menu

Right-click 3D viewport label > Views

The Views menu is used to view scenes through any user-defined views or through the isometric, dimetric, or trimetric preset views.

You can also set and remove the current view as the default for the current file type, and you can remove the default file type views from all file types.

Interface

Camera [number] (on page 212)—Displays the scene through the selected camera.

30 Isometric—Used to select a 30º isometric viewpoint from the selected point through which to view the scene. All lengths are parallel to the axes and are displayed at their true length. See Preset Views (on page 73) for information on the viewpoint menu commands.

27 Isometric (1:2)—Used to select a 27º isometric viewpoint through which to view the scene. See Preset Views (on page 73) for information on the viewpoint menu commands.

45 Isometric (Military)—Used to select a 45º isometric viewpoint through which to view the scene. See Preset Views (on page 73) for information on the viewpoint menu commands.

Dimetric (42/7)—Used to select a dimetric viewpoint through which to view the scene. See Preset Views (on page 73) for information on the viewpoint menu commands.

43 Trimetric—Used to select a 43º trimetric viewpoint through which to view the scene. See Preset Views (on page 73) for information on the viewpoint menu commands.

48 Trimetric—Used to select a 48º trimetric viewpoint through which to view the scene. See Preset Views (on page 73) for information on the viewpoint menu commands.

User-defined views (on page 74)—Displays the scene using the selected user-defined view.

Set the Current View as Default for current format—Sets the current camera view for all files of the current type.

Erase Default Camera for current format—Restores the original camera view for the current file type.

Erase Default Camera for all files—Restores the original camera view for all file types.

Scene Right-Click Menu

Right-click scene no selection

The scene right-click menu contains commands for controlling various scene elements; camera motion, cross section plane display, auto-rotation, the scene background, and object display. You can also access and modify the scene properties. For example, you can modify the global ambient color, the scene's units, and the scene's element colors.

This menu appears when you right-click over the scene with nothing selected. The commands differ depending on whether objects are displayed or hidden.

These commands are local and are overridden by the menu bar commands (on page 199). For example, if you display a viewport in the Wireframe render mode and another viewport in the Line Illustration mode, selecting the Solid render mode from the Display menu displays all viewports in Solid mode.

Note: The Scene menu is only displayed when no objects are selected. If you select an object using this menu, the next time you right click in the viewport, the Object menu appears.

Interface

Tools (on page 321)—Used to control a number of scene elements including removing duplicate materials and meshes.

View to Active Object—Zooms the camera in on the active object. You can also press V on your keyboard with an object selected.

View to Visible Objects—Is used to focus the camera on all the visible objects. You can also press V on your keyboard with no selection.

View to All Objects—Is used to focus the camera on all visible and hidden objects.

Standard View (on page 72)—Displays the scene in its standard camera view in the current viewport.

World Coordinate System (on page 77)—Aligns the coordinates to control the camera movement along the world axes.

Note: Selecting the world system in the 3D Editor toolbar affects the 3D Editor tools only.

Screen Coordinate System (on page 77)—Aligns the coordinates to control the camera movement along the viewport axes.

Show Cross Section (on page 286)—Displays and hides the scene's cross section plane.

Restore Cross Section (on page 286)—Moves the cross section plane back to its original position in the scene.

Auto-Rotate— Rotates the model automatically. When the model is rotated with the mouse, auto rotate is initiated in the direction and at the speed of the mouse action until you click over the model again. This command may lessen the display performance.

Pan Mode for Flat Files—Constrains the camera to pan mode for 'flat' files. For example, a .cgm file. This ensures that even if a flat file has 3D object coordinates, it cannot be rotated.

Open Background (on page 80)—Used to add an image to use as the scene's background.

Background Image (on page 80)—Used to modify or clear the scene background image.

- **Stretch**—Scales the image to fit the viewport in real-time.
- **Tile**—Tiles the background image in the viewport.
- **Center**—Centers the background image in the viewport.
- **Clear Background**—Removes the background image from the scene.

Select All—Selects all objects in the scene.

Select Same Level Objects (on page 139)—Selects all objects that are on the same hierarchy level. This is helpful when creating layers that you want to be made from objects that are at the same hierarchy level.

Deselect Same Level Objects (on page 139)—Clears all objects that are on the same hierarchy level from selection.

Show All Objects—Displays all objects.

Hide All Objects—Hides all objects in the scene.

Scene Properties (on page 270)**—**Opens the Scene Properties dialog and is used to view and edit the current scene's properties.

Copyright © Right Hemisphere 2006. All Rights Reserved.

Object Right-Click Menu

Select objects > Right-click viewport

The object right-click menu contains commands for controlling the display of objects including hiding, selecting, and grouping objects. You can also access and modify the objects' properties.

This menu appears when you right-click over the scene with one or more objects selected. The commands differ depending on whether objects are displayed or hidden, the number of objects selected, or if the object is a group or belongs to a group.

These commands are local and are overridden by the menu bar commands (on page 199). For example, if you display a viewport in the Wireframe render mode and another viewport in the Line Illustration mode, selecting the Solid render mode from the Display menu displays all viewports in Solid mode.

Note: The Object menu is only displayed when one or more objects are selected. If you clear all objects from selection using this menu, the next time you right click in the viewport, the Scene menu appears.

Interface

Tools (on page 321)—Used to control a number of elements for selected objects including removing duplicate materials and meshes.

View to Active Object—Zooms the camera in on the active object. You can also press V on your keyboard with an object selected.

View to Visible Objects—Is used to focus the camera on all the visible objects. You can also press V on your keyboard with no selection.

View to All Objects—Is used to focus the camera on all visible and hidden objects.

Standard View (on page 72)—Displays the scene in its standard camera view in the current viewport.

Select All—Selects all objects in the scene.

Select Same Level Objects—Selects all objects that are on the same hierarchy level.

Deselect Same Level Objects—Selects all objects that are on the same hierarchy level.

Invert Selection—Inverts the current selection.

Select Sub-Objects—Selects all sub-objects of the selected object.

Note: You can also use various keyboard shortcuts (on page 355) to select sub-objects and clear sub-objects from selection.

Show All Objects—Displays all objects.

Show Selection—Displays all selected objects.

Hide All Objects—Hides all objects in the scene.

Hide Selection—Hides the selected object.

Hide Unselected—Hides all unselected objects.

Create Group (on page 96)—Creates a group when you have multiple objects selected.

Attach to Group (on page 96)—Attaches the selected objects to an existing group or to create a new group.

Detach from Group (on page 96)—Detaches the selected object from the selected.

Ungroup (on page 96)—Separates the selected group into separate objects.

Delete Objects—Deletes all selected objects.

Object Properties (on page 271)—Opens the Object Properties dialog and is used to modify the selected objects' properties.

Tools Right-Click Menu

Right-click scene no selection > Tools
Select objects > Right-click viewport > Tools
Scene Components panel > Scene tree > 3D Objects list > Right-click object > Tools
Scene Components panel > Scene tree > 3D Objects list > Right-click no selection > Tools

The Tools menu can be used to perform a number of functions including moving the pivot point and removing duplicate materials.

Certain options are only available depending on the current file type, and whether or not objects are selected. For example, if you right-click in the viewport with an object selected, the pivot point commands are available.

Many of these commands are also available from the 3D Tools menu (on page 222) accessed via the menu bar. Here, we describe only the commands that are unique to the Tools right-click menu.

Interface

Move Pivot Point To Object Center—Moves the pivot point to the center of the object.

Move Pivot Point To Scene Center—Moves the pivot point to the center of the scene.

Move Pivot Point To Selection Center—Moves the pivot point to the center of the selection.

Benchmark (on page 107)**—**Measures the speed of your computer and graphics card and sends the information to a text file.

Convert to Double-Sided (on page 122)—Duplicates object polygons to display the same surface on the front and back faces of the objects.

Note: This function doubles the number of polygons. It may be more efficient to apply the double-sided attribute to an object (on page 272) or material (on page 282), or use CTRL+H to show the back-facing geometry.

Fly Camera to Selection—Zooms into the viewport to focus on the selected objects.

Invert Faces (on page 109)—Inverts all faces.

Join Equal Points (on page 114)—Joins all the points that have equal (coincident) x,y,z coordinates.

Remove Degenerate Triangles—Removes all degenerate triangles from the scene or from the selected objects depending on your selection. This is helpful if you want to optimize the model size and render speed.

Remove Duplicate Faces—Removes all duplicate faces from the scene or from the selected objects depending on your selection. This is helpful if you want to optimize the model size and render speed.

Remove Duplicate Materials—Removes all duplicate materials from the scene or from the selected objects depending on your selection. This is helpful if you want to optimize the model size and render speed.

Remove Duplicate Meshes—Removes all duplicate meshes from the scene or from the selected objects depending on your selection. This is helpful if you want to optimize the model size and render speed.

Remove Internal Parts (on page 111)**—**Opens the Remove Internal Parts Wizard and is used to hide or delete internal objects from the model. This function cannot be reversed.

Copyright © Right Hemisphere 2006. All Rights Reserved.

Unify Normals (on page 110)—Opens the Unify Normals dialog and is used to align all surface normals in the same direction.

Collapse Hierarchy (on page 96)—Collapses all sub-objects into the selected object hierarchy.

Note: Collapsing the hierarchy deletes any animation that may exist on sub-objects. If the scene is saved the original hierarchy cannot be recovered.

Separate Meshes (on page 113)**—**Groups a model that is grouped under one object but made up of a number of separate meshes, as separate meshes under the objects name.

Right-Click Selection Menu

CTRL+right-click > Drag in 3D viewport

A selection menu is displayed if you press CTRL, right-click and then drag in the 3D viewport. Using this menu, you can choose to display all objects, front-sided objects, or back-sided objects.

Interface

All Objects—Displays all objects in the scene.

Front-Facing—Displays only front-facing objects in the scene.

Back-Facing—Displays only back-facing objects in the scene.

Cancel—Closes the menu.

Animation Timeline Menus

Right-click object name in sequence hierarchy
Right-click sequence name in sequence hierarchy
Right-click track name in sequence hierarchy
Right-click node in animation timeline
Right-click in animation timeline

Various right-click menus are available from within the timeline and when the cursor is located over the hierarchy nodes. For example, if you right-click the object name, you can display the object's properties, and add new tracks.

Some of the commands are common to both menus. Here we discuss all commands across all the animation timeline right-click menus.

Interface

Node/object list—Used to display the animation tracks of the individual object instances (on page 84) or the object.

- **Node**—Displays the animation tracks of the selected Scene tree node. That is, the object instance.
- **Object**—Displays the animation tracks of the actual object that the selected Scene tree node represents.

Right-click sequence—Used to perform various functions for the selected sequence.

- **Copy**—Copies all currently displayed tracks to the clipboard.
- **Paste**—Pastes the copied tracks to the current sequence.

- **New Track**—Used to add various track types to the sequence hierarchy. The available track types depend on the current object type. For example, the Opacity track is available for most 3D objects, and the Pos/Rot/Scale and FOV tracks are available for camera objects.
- **Activate**—Activates the selected sequence.
- **Duplicate** (on page 255)—Used to duplicate the selected sequence.
- **Reverse**—Reverses the keys of the currently visible tracks of the current sequence; the first key becomes the last, and the last becomes the first.

Right-click track—Used to perform various functions for the selected track.

- **Copy**—Copies the selected track to the clipboard.
- **Paste**—Pastes the selected track to the current sequence.
- **Delete**—Deletes the selected track.
- **Track Properties**—Used to choose the type of track interpolation (on page 103), and to establish the start and end points of a cyclic animation.
  - **TCB Interpolation**—Applies TCB interpolation to the track. The spline (curve) is interpolated between each key to smooth the animation. Note that TCB interpolation is only available for certain types of tracks.
  - **Linear Interpolation**—Applies linear interpolation to the track. The track lines are linked directly between each key.
  - **Start Cyclic**—Sets the selected key as the start points of a cyclic animation.
  - **End Cyclic**—Sets the selected key as the start points of a cyclic animation.

Right-click timeline—Used to perform various functions for the selected animation.

- **Insert Key**—Creates a key in the closest frame to where you right-click.
- **Copy**—Copies the selected keys to the clipboard.
- **Paste**—Pastes the selected keys to the current time/frame.
- **Pan Mode**—Used to pan the timeline view.
- **Scale Mode**—Used to scale the timeline view.
- **Selection Mode**—Used to select keys in the timeline.
- **Fit Horizontally**—Fits the current track into the timeline window in the horizontal direction. This is helpful if the frames are spread over a large duration.
- **Fit Vertically**—Fits the current track into the timeline window in the vertical direction. This is helpful if the components are spread over a broad number of values.
- **Auto-Fit**—Automatically fits the timeline in the available space. note that the auto-fit functionality become apparent when you view a different track.
- **Track Properties**—Used to choose the type of track interpolation, and to establish the start and end points of a cyclic animation.
  - **TCB Interpolation**—Applies TCB interpolation to the track. The spline (curve) is interpolated between each key to smooth the animation.
  - **Linear Interpolation**—Applies linear interpolation to the track. The track lines are linked directly between each key.
  - **Start Cyclic**—Sets the selected key as the start points of a cyclic animation.
  - **End Cyclic**—Sets the selected key as the start points of a cyclic animation.

Right-click key—Used to perform various functions for the selected key.

Note: Most of the commands that are displayed here relate to right-clicking the timeline, and as such as described above.

- **Key Properties** (on page 324)—Opens the Key Properties dialog and is used to manually set properties for the selected key.

Copyright © Right Hemisphere 2006. All Rights Reserved.

Key Properties Dialog

Right-click key in Animation timeline > Key Properties

A number of properties can be viewed and/or set for keyframes using the Key Properties dialog.

Procedure

To open the Key Properties dialog:

Right-click a key in the animation timeline and click Key Properties.

Interface

Index—Display the current frame.

Time—The current time/frame.

X—The X axis position of the selected key.

Y—The Y axis position of the selected key.

Z—The Z axis position of the selected key.

Tension—The sharpness of the bend of the key's curve. A positive value tightens the curve at the key, while a negative value produces a wider bend. The default is 0.

Continuity—The smoothness of the curve as it moves through the key. If the value differs from the default value of 0, it forms a corner at the keyframe. The direction of the corner depends on which side of the default value (0), the entered value is. For example, +1 or -1.

Bias—The balance between the curve before and after the key. A negative value gives more weight to the left side of the key, while a positive value gives more weight to the right side. The default value of 0 balances the curve on both sides of the key.

Soft—Applies the default 'soft' TCB setting to the selected key's.

Medium—Applies the default 'medium' TCB setting to the selected key's.

Hard—Applies the default 'hard' TCB setting to the selected key's.

File List Menus

Right-click folder in File list
Right-click file in File list
Right-click File list no selection

Various context-sensitive right-click menus are available when you right-click in the File list. The menus that appear depend on the location of your cursor or the current File list tab:

- **Folder menu** (on page 325): Appears when you right-click over a folder in the File list. This menu is identical to the right-click Folders panel menus.
- **File menu:** Appears when you right-click over a file in the File list. Many of these options are also common to the Folders panel menus (on page 325).
- **File list:** Appears when you right-click over the blank space in the File list. It includes various commands that relate specifically to File list. For example, sorting the File list and generating thumbnails.
- **Gateway menus** (on page 326): Appear when you are connected to a server via the Gateway Module (on page **Error! Bookmark not defined.**).

Here, we describe the options specific to File list.

Note: Certain menu options use standard Windows conventions and as such are not described here.

Interface

Open (on page 42)—Opens the selected file in the viewport.

Open in Deep Exploration with—Opens the selected file with the plugin of your choice. For example, Half-Life Model or Quake Models.

Import With—Opens the selected file with the application of your choice. For example, 3ds max, Photoshop, PowerPoint, or Maya.

Explore—Opens the drive or folder selected in the Folders panel in a separate window.

View—Used to select how the file information is displayed.

Sort File List (on page 206)—Used to arrange files and folders in the File list.

Refresh—Refreshes the viewport display.

Generate Thumbnails (on page 220)**—**Creates or updates thumbnails in the thumbnails cache, for all files in the current folder.

Select all Files—Selects all files displayed in this field.

Batch Operations (on page 202)—Used to convert, or render and convert all files in the select in the selected folder.

Describe—Opens the Edit Description dialog and is used to enter a description for the selected file.

Add To Favorites (on page 242)—Adds the selected file to the Favorites list.

Properties—Displays the properties of the selected folder.

Folders Panel Menus

Folders panel > Right-click drive
Folders panel > Right-click folder

Various context-sensitive right-click menus are available when you right-click drives and folders in the Folders panel. The available commands differ depending on whether the current selection is a drive local to your computer, a network drive, or a folder. Additionally, many commands use standard Windows conventions and as such, are not described in detail.

Interface

Open—Opens the selected drive or folder contents in a separate window.

Explore—Opens and explores the selected drive or folder in a separate window.

Search—Opens the Search Results dialog and is used search through the selected drive or folder.

Make Available Offline—Opens the Offline Files Wizard and makes the selected drive or folder available when you are not connected to a network.

Synchronize—Synchronizes the selected drive or folder.

Sharing and Security—Modifies sharing and security properties for the selected drive.

Scan for Viruses—Scans the selected drive or folder for viruses using your default virus software.

Add to Zip—Adds the selected drive or folder to a .zip file.

Copyright © Right Hemisphere 2006. All Rights Reserved.

Add to [folder name] Zip—Adds the selected drive or folder to a .zip file with the same name.

Format—Formats a local drive.

Disconnect—Disconnects a network drive from the network.

Send To—Used to send or copy the selected folder and its contents to:

- A compressed zipped folder.
- The desktop.
- A mail recipient.
- The 'My Documents' folder.
- The 3.5 floppy drive.

Batch Operations—Used to convert, or render and convert all files in the selected folder.

Cut—Removes the selected folder and its contents and place them on the clipboard. You can then move it to another location.

Copy—Copies the selected folder and its contents to the clipboard. You can then paste it to another location.

Copy Location—Copies the full path name of the selected folder to the clipboard. You can then paste it to another location.

Copy To—Copies the selected folder and contents to another location.

Move To—Moves the selected folder and contents to another location.

Delete—Deletes the selected folder and its contents.

Rename—Used to rename the selected folder.

New Sub-folder—Adds a sub-folder to selected folder.

Describe—Used to edit the folder's description. This description is then displayed in the File list's Description column.

Add to Favorites (on page 242)—Adds the selected folder path to your Favorites list.

Properties—Opens the Properties dialog for the selected drive or folder, and is used to modify those properties.

Gateway Panel Menus

Gateway panel > Assemblies tab > Right-click nodes
Gateway panel > Asset tab > Right-click nodes

Various context-sensitive right-click menus are available when you right-click in the Gateway panel (on page 247), with which you can perform a variety of functions.

The menus that appear depend on the location of your cursor within the panels' tabs. For example, if you right-click a server node in the Assemblies panel, you can remove or log out of the server, and upload assemblies. If you right-click an item node in the Assemblies and Assets panels, you can download subgroup files that correspond to that item.

Note that a right-click menu appears when you right-click over an empty area in the panel, as described below.

Interface

Refresh—Refreshes the panel display. This command is only displayed when a server has been added to Gateway.

Add Server (on page 176)—Used to add a server to Gateway.

Preferences (on page 187)—Used to manage server and file settings. For example, the location of temporary files, and the number of passwords entered when logging onto the server.

Add Deep Server Dialog

Gateway panel > Right-click > Add Server

The Add Deep Server dialog is used to add new servers to Gateway by typing or selecting a URL that corresponds to the name of the server. Once Gateway validates the URL, it gets stored in a local file and is displayed in the Gateway panel.

Procedure

To open the Add Deep Server dialog:

1. Right-click an empty area on the Gateway panel.
2. Select **Add Server**.

Interface

Name—The name that you assign to a Deep Server.

Address—The directory location of the Deep Server to which you will connect (eg. *deepserverwebapi*).

OK—Closes the dialog, and applies the settings. Any changes are saved.

Cancel—Cancels the process and closes the dialog. Any changes made to the settings are lost.

Help—Opens the relevant Help topic.

Preferences Dialog

Gateway panel > Right-click > Preferences

The Preferences dialog is used to modify various settings (on page 187), including settings for the management and storage of downloaded files (on page 180), and the Gateway history.

Procedure

To open the Preferences dialog:

1. Right-click an empty area in the Assemblies or Assets tab.
2. Click **Preferences**.

Interface

Temporary Files Cache (on page 180)—Used to modify the settings for the cache into which temporary files are downloaded, and to manage downloaded files.

- **Current location**—Displays the current location of the temporary files cache.
- **Amount of disk space to use**—Determines the size in MB, for the amount of space used to store downloaded files. When the size is exceeded, Deep Server deletes the oldest files first to make room for new files as they are downloaded.

Copyright © Right Hemisphere 2006. All Rights Reserved.

  - **MB**—The maximum size of the temporary files cache.
- **Days to keep files**—Determines the number of days that temporary files are kept before they are deleted. Note that Deep Server begins to delete the files if the size of the cache is reached before this time is exceeded.
- **Delete files on exit**—Deletes all temporary files when you exit Gateway.
- **Change Folder**—Used to change the location of the temporary files cache. By default, this is the 'My Documents\My 3D Models\Gateway' folder. Note that when you change this location, any files that were downloaded previously are deleted.
- **View Files**—Used to display all the temporary files stored in the cache for the current session.
- **Delete Files**—Used to delete all temporary files.

History—Used to modify the server history settings.

- **Remember servers visited** (on page 176)—Directs Deep Server to remember the server locations that were added from previous sessions.
- **Remember passwords entered** (on page 176)—Directs Deep Server to store and encrypt passwords that were used in previous sessions, and to store them in the registry.

Download (on page 180)—Used to modify the settings for the downloaded files.

- **Number of threads for downloading files simultaneously**—Determines the number of concurrent downloads that Deep Server performs when downloading files.

OK—Closes the dialog and saves the settings.

Cancel—Closes the dialog. Any changes made to the settings are lost.

Apply—Applies the settings.

Help—Opens the relevant Help topic.

Server Node Menu

Right-click server node

The server node menu appears when you right-click a server node. The commands differ depending on the current tab. Many of the commands are common to both the Assemblies and Assets tabs, while others are specific to each. Here we discuss all commands across all tabs.

Interface

Expand—Expands the selected node to show all sub-nodes and files.

Collapse—Collapses the selected node to hide all sub-nodes and files.

Remove Server (on page 176)—Removes the selected server from Gateway.

Log Out (on page 176)—Logs out of the selected server.

Refresh (on page 187)—Refreshes the panel display. This command is only displayed when a server has been added to Gateway.

Rename (on page 176)—Used to modify the name of the selected server.

Add Project (on page 178)—Adds a new project folder to the selected server.

Upload Assembly (on page 179)—Uploads all assembly files for the selected folder to the database.

Upload Assets (on page 178)—Uploads all asset files for the selected folder to the database.

Properties (on page 186)—Displays the properties for the selected server, including the server's location, number of sub-folders, and assembly extension supported. It also displays the current details for the current user.

Add Project Dialog

Gateway panel > Right-click server node > Add Project

The Add Project dialog is used to add new project folders (on page 178) to the server database in which store and manage assets.

Procedure

To open the Add Project dialog:

1. Right-click a server node in the Assets tab.
2. Click **Add Project**.

Interface

Name—The name if the new project.

Description—The description of the project.

OK—Creates the project and closes the dialog.

Cancel—Cancels the process and closes the dialog. Any changes made to the settings are lost.

Help—Opens the relevant Help topic.

Upload Assets Dialog

Gateway panel > Assets tab > Right-click server or folder node > Upload Assets

The Upload Assets dialog is used to upload single assets (on page 178) to the selected server's database.

Procedure

To open the Upload Assets dialog:

1. Right-click a server or folder node in the Assets tab.
2. Click **Upload Assets**.

Interface

Add Asset—Used to navigate to, and select the assets that you want to upload.

Remove—Removes the selected assets from the asset window.

Upload—Uploads the assets to the selected server's database.

Added files window—Displays all the assets that will be uploaded.

Abort—Cancels the update process.

Project—Used to select a project in which to group the assets.

Copyright © Right Hemisphere 2006. All Rights Reserved.

Method—Used to select and run a default set of processes that create and render the assets' derivatives.

Category—The category into which derivatives and links are downloaded.

Metadata—The keywords on which you can search for the assets.

Upload Assembly Dialog

Gateway panel > Assemblies tab > Right-click server or folder node > Upload Assembly

The Upload Assembly dialog is used to upload assemblies (on page 179) to the selected server's database.

Procedure

To open the Upload Assembly dialog:

1. Right-click a server or folder node in the Assemblies tab.
2. Click **Upload Assembly**.

Interface

Folder—The folder that contains the assembly files that will be uploaded.

Browse—Used to navigate to and select the assembly files that you want to upload.

Assembly files—Used to add the 2D extensions for which Deep Server searches for those files types. For example, jpg, gif.

Assembly files window—Displays all the files in the selected folder.

Select all—Selects all files in the workspace list.

Add—Adds the selected files to the upload window.

Remove—Removes the selected assembly files from the added files window.

Remove All—Removes all assembly files from the added files window.

Added files window—Displays all the assembly files that will be uploaded.

Top Level—Sets the selected file as the 'main' file used to determine the arrangement of the part files to create the assembly.

Project—Used to select a project in which to group the assembly.

Method—Used to select and run a default set of processes that create and render the assemblies' derivatives.

Category—The category into which derivatives and links are downloaded.

Metadata—The keywords on which you can search for the assembly files.

Referencing—References all assembly files to their original location instead of packed in .zip file, eliminating the need to archive, copy, and unzip large amounts of data to the share folder.

Build assembly—Builds an .rh file assembly when the files are uploaded. Otherwise, all the files are uploaded without the .rh file being built.

Upload—Uploads the assembly files to Deep Server for processing.

Gateway Properties Dialog

Gateway panel > Assembly/Asset tab > Right-click node > Properties

The Gateway Properties dialog is used to view properties (on page 186) of any node displayed in the Gateway panel, and to modify the server node properties (on page 186).

Procedure

To open the Gateway Properties dialog:

1. Right-click the node for which you want to view the properties in the Assemblies or Assets tab.
2. Click **Properties**.

General Tab

Gateway panel > Assembly/Asset tab > Right-click node > Properties > General

Using the General tab, you can view various properties for the selected node. You can also modify many properties for selected servers including the server name, description, and security certificate settings.

The options differ depending on the current node. Many are common to all nodes, while others are specific to each. Here we discuss all options across all nodes.

Interface

Name field—The name of the node. If viewing the server node properties, this field can be used to edit server's name.

Type—The node type. For example, a Deep Server, assembly, project, folder, or associated file node.

Location—The node location.

Contains—The contents of the node. For example, projects within a server node, or sub-assemblies, and parts within an assembly node.

Node details—Various properties are displayed for the selected node. For example, the category, metadata, and version are displayed for assembly nodes.

Processing Methods—Displays the supported processing methods for the selected server. This property is only displayed for server nodes.

Asset extensions supported—The 3D asset formats that are supported by the selected server. For example, .rh and .dwg. This property is only displayed for server nodes.

Assembly extensions supported—The 3D assembly formats that are supported by the selected server. For example, .asm and .catproduct. This property is only displayed for server nodes.

Security Certificate—Used to view and edit the selected server's security certificate information and settings. This button is only displayed for server nodes.

OK—Applies the settings and closes the dialog. Any changes made to the settings are saved.

Cancel—Closes the dialog. Any changes made to the settings are lost.

Help—Opens the relevant Help topic.

Copyright © Right Hemisphere 2006. All Rights Reserved.

User Details

Gateway panel > Assembly/Asset tab > Right-click server node > Properties > User Details

Using the User Details tab, you can view various properties for the selected server. You can also modify many of the properties including the server name, description, and security certificate settings.

Interface

User name—The user name used to log in to the selected server.

Full name—The full name associated with the user name.

E-mail—The e-mail address associated with the user name.

Role—The user privileges associated with the user name.

Change Password—Used to edit the server's existing password.

- **Old Password**—The current password used to access the server.
- **New Password**—The new password that will be used to access the server.
- **Confirm New Password**—The new password as entered in the New Password field.

OK—Applies the settings and closes the dialog. Any changes made to the settings are saved.

Cancel—Closes the dialog. Any changes made to the settings are lost.

Help—Opens the relevant Help topic.

Folder Node Menu

Right-click folder node

The folder node menu appears when you right-click a folder node. The commands differ depending on the current tab. Many of the commands are common to both the Assemblies and Assets tabs, while others are specific to each. Here we discuss all commands across all tabs.

Note that the folders displayed in the Gateway panel can be a project added to Gateway (on page 178), a category defined in Gateway (on page 178), or a project or category created in Deep Server Web. Please see your Systems Administrator for further information for information on Deep Server Web.

Interface

Expand—Expands the selected node to show all sub-nodes and files.

Collapse—Collapses the selected node to hide all sub-nodes and files.

Download All Subgroups (on page 180)—Downloads all .rh derivatives that relate to the selected folder's child nodes or assets. Note that .rh derivatives relating to any nested nodes or assets of the folder are not downloaded.

Refresh (on page 187)—Refreshes the panel display.

Upload Assembly (on page 179)**—**Uploads all assembly files for the selected folder to the database.

Upload Assets (on page 178)**—**Uploads all asset files for the selected folder to the database.

Properties (on page 186)**—**Displays the properties for the selected folder, including the folder type, location, and number of sub-folders.

Asset and Item Node Menu

Right-click asset/item node

The asset and item node menu appears when you right-click an asset, assembly, or derivative node. The commands differ depending on the current tab, the node type, and the current status of the node. That is, whether the base derivative or subgroups have been downloaded, etc.

Many of the commands are common to both the Assemblies and Assets tabs, while others are specific to each. Here we discuss all commands across all tabs.

Interface

Expand—Expands the selected node to show all sub-nodes and files.

Collapse—Collapses the selected node to hide all sub-nodes and files.

Download Asset (on page 180)—Downloads the selected asset to the temporary files cache, and display it in the viewport.

Download Derivative (on page 180)—Downloads the base derivative (on page 174) of the selected node to the temporary files cache, and display it in the viewport.

Download Derivative as Link (on page 180)—Downloads the link of the selected derivative to the temporary files cache.

Remove Derivative from Cache (on page 185)—Removes the selected derivative from the temporary files cache.

Remove Asset from Cache (on page 185)—Removes the selected asset from the temporary files cache.

Download All Derivatives (on page 180)—Downloads all derivatives of the selected item's child nodes or assets to the temporary files cache, and displays the selected derivative in the viewport.

Download All Subgroups (on page 180)—Downloads all base derivatives that relate to the selected item's child nodes or assets. Note that base derivatives relating to any nested nodes or assets of the item are not downloaded.

Refresh (on page 187)—Refreshes the panel display.

Delete Assembly from Server (on page 186)—Deletes the selected assembly from the server.

Upload Assembly (on page 179)**—**Uploads all assembly files for the selected item to the database.

Upload Assets (on page 178)**—**Uploads all asset files for the selected item to the database.

Upload Associated Files (on page 184)—Adds associated files to the selected asset.

Upload Scene as Associated File (on page 184)—Saves the current scene as an associated file to the selected assembly or asset.

Update Asset (on page 185)—Updates the selected asset and all the asset's derivatives.

Properties (on page 186)**—**Displays the properties for the selected item, including the folder type, location, and number of associated files.

Copyright © Right Hemisphere 2006. All Rights Reserved.

Upload Associated Files Dialog

Gateway panel > Assemblies/Assets tab > Right-click asset or item > Upload Associated Files
Gateway panel > Assemblies/Assets tab > Right-click asset or item > Upload Scene as Associated File

The Upload Associated Files dialog is used to associate files with assets (on page 184) and then upload them. Associated files can be any type of file. For example, a Microsoft Word document. They can also be the scene that is currently displayed in the Deep Exploration viewport.

Note: You cannot search for associated files directly; you must first search for the asset and then look under the Associated Files tab.

Procedure

1. Right-click the asset or item node in the Assemblies or Assets tab.
2. Do one of the following:
   - Click **Upload Associated Files**.
   - Click **Upload Scene as Associated File**, enter a name for the new file, and then click **OK**.

Interface

Add Asset—Used to select the assets for which you want to associate a file.

Remove—Removes the selected assets from the asset window.

Upload—Uploads the assets to Deep Server for processing.

Added files window—Displays all the assets that have been added for uploading.

Abort—Cancels the associated files process.

Update Asset Dialog

Gateway panel > Assemblies tab > Right-click asset or item > Update Asset
Gateway panel > Assets tab > Right-click asset > Update Asset

The Update Asset dialog is used to update assets (on page 185) and all their derivatives if the asset has been modified. Note that you can only update single assets, not assembly or part files.

Procedure

To open the Update Asset dialog:

1. Right-click the asset or item node in the Assemblies or Assets tab.
2. Click **Update Asset**.

Interface

Add Asset—Used to navigate to and select the assets that you want to update.

Remove—Removes the selected assets from the asset window.

Update—Updates the selected asset and all its derivatives.

Added files window—Displays all the assets that will be updated.

Abort—Cancels the update process.

History List Menus

History list > Right-click file

A menu appears when you right-click a file in the History list. Many of the commands are common to the Folders panel right-click menus (on page 325).

Here, we describe the commands specific to the History list.

Interface

Open With—Opens the selected file with the external application of your choice. For example, 3ds max, Photoshop, PowerPoint, or Maya.

Import Options (on page 43)—Used to modify and apply import properties, if any, to the format type. These options differ depending on the selected format, and many are common between the formats.

Information Bar Menu

Right-click in Information bar

A menu appears when you right-click in the Information bar and is sued to display the bar in one of two different views.

Interface

Compact View—Displays the bar at a reduced size; without the file icon and with a smaller file name. This is helpful when you need more space to display files on your monitor.

Classic View—Displays the bar in the regular view; with the file icon and a large file name.

Menu Bar Menu

Right-click menu bar

A right-click menu is available when you right-click Deep Exploration's menu bar. It can be used to view and change the display of the application interface by displaying controls and toolbars. It is also used to access the Customize Layout dialog.

All the commands are available on the View menu and as such are described in the View Menu (on page 206) section.

Model Views Panel Menu

Model Views panel > Right-click model view

The Model Views panel menu contains a number of commands used to control the model views.

Interface

Sort—Used to arrange views in the Model Views panel list.

- **By Name—**Arranges views by name in ascending or descending order depending on your selection.
- **By Creation Time—**Arranges views by time in ascending or descending order depending on your selection.

Copyright © Right Hemisphere 2006. All Rights Reserved.

- **Ascending—**Arranges views in ascending order by name or time depending on your selection.
- **Descending—**Arranges views in descending order by name or time depending on your selection.

Activate—Activates the selected view in the selected viewport.

Delete—Deletes the selected view.

Update Model View—Updates the selected model view with the current render and viewport settings.

Properties (on page 265)—Opens the Model View Properties dialog and is used to modify the selected view's properties.

Scene Components Panel Menus

Certain context menus are available when you right-click within the Scene Components panel. The available commands depend on the component of the panel you are viewing. For example, the Scene tree or Materials list. They also depend on your current selection within each component.

For example, if you have an object selected in the 3D Objects list, object selection commands are available. However, if you have a material selected, material commands are available.

Scene Tree Menus

Scene Components panel > Scene tree

The Scene tree comprises the 3D Objects list and the Materials folder. Various right-click menus are available from within the tree depending on the hierarchy node over which the cursor is located:

- Commands relating to the scene and the scene objects are displayed when you right-click over the 3D Objects list node or the object nodes. For example, you can select and hide objects, and create groups of objects.
- Commands relating to the scene's materials are displayed when you right-click over the Materials folder node or the material nodes. For example, you can duplicate and delete materials, and you can select objects that are associated a selected material.

3D Objects List Menu

Scene Components panel > Scene tree > 3D Objects list > Right-click object
Scene Components panel > Scene tree > 3D Objects list > Right-click no selection

The 3D Objects list menu contains numerous commands. Certain commands are only available if one or more objects are selected, or if the object is a group or belongs to a group.

Interface

Tools (on page 321)—Used to perform a number of functions including moving pivot points and removing duplicated elements.

Activate Camera (on page 212)—Displays the scene through the selected camera.

Rename—Used to rename the selected object.

Select All—Selects all objects in the scene.

Invert Selection—Inverts the current selection.

Select Sub-Objects—Selects all sub-objects of the selected object.

Note: You can also use various keyboard shortcuts (on page 355) to select sub-objects and clear sub-objects from selection.

Show All Objects—Displays all objects.

Show Selection—Displays all selected objects.

Hide All Objects—Hides all objects in the scene.

Hide Selection—Hides the selected object.

Hide Unselected—Hides all unselected objects.

Create Group (on page 96)—Creates a group when you have multiple objects selected.

Attach to Group (on page 96)—Attaches the selected objects to an existing group or to create a new group.

Detach from Group (on page 96)—Detaches the selected object from the selected.

Ungroup (on page 96)—Separates the selected group into separate objects.

Delete Objects—Deletes all selected objects.

Scene Properties (on page 270)**—**Opens the Scene Properties dialog and is used to view and edit the current scene's properties.

Object Properties (on page 271)—Opens the Object Properties dialog and is used to modify the selected objects' properties.

Materials Folder Menus

Scene Components panel > Scene tree > Materials folder > Right-click folder
Scene Components panel > Scene tree > Materials folder > Right-click material

The Materials folder menus contain numerous commands. The available commands differ depending on your selection. That is, whether the Materials folder or an individual material is selected.

Interface

Create Material (on page 98)—Creates a new material. The material is displayed at the end of the list.

Remove Unused Materials—Removes any materials unused in the scene.

Merge Duplicate Materials—Merges all duplicate materials.

Duplicate (on page 98)—Duplicates the selected material.

Delete (on page 98)—Deletes the selected material.

Rename (on page 98)—Used to rename the selected material.

Select Objects (on page 98)—Selects all objects that are associated with the selected material.

Material Properties (on page 282)—Opens the Materials Properties dialog and is used to modify the selected material's properties.

Copyright © Right Hemisphere 2006. All Rights Reserved.

Materials List Menu

Materials list > Right-click material

The Materials panel menu contains a number of commands used to control the scene's materials.

Interface

Create Material (on page 98)**—**Creates a new material. The material is displayed at the end of the list.

Duplicate (on page 98)—Duplicates the selected material.

Delete (on page 98)—Deletes the selected material.

Rename (on page 98)—Used to rename the selected material.

Select Objects (on page 98)—Selects all objects that are associated with the selected material.

Material Properties (on page 282)—Opens the Materials Properties dialog and is used to modify the selected material's properties.

Parts Panel Menu

Scene Components panel > Parts panel > Right-click part

The Parts panel contains a number of commands; the commands differ depending on the current object selection and grouping.

Interface

Tools (on page 321)—Used to perform a number of functions including moving pivot points and removing duplicated elements.

Rename Callout—Used to edit the selected callout's name.

Rename—Used to rename the selected object.

Select All—Selects all objects in the scene.

Select Same Level Objects (on page 139)**—**Selects all objects that are on the same hierarchy level. This is helpful when creating layers that you want to be made from objects that are at the same hierarchy level.

Deselect Same Level Objects (on page 139)—Clears all objects that are on the same hierarchy level from selection.

Invert Selection—Inverts the current selection.

Select Sub-Objects—Selects all sub-objects of the selected object.

Note: You can also use various keyboard shortcuts (on page 355) to select sub-objects and clear sub-objects from selection.

Show All Objects—Displays all objects.

Show Selection—Displays all selected objects.

Hide All Objects—Hides all objects in the scene.

Hide Selection—Hides the selected object.

Hide Unselected—Hides all unselected objects.

Create Group (on page 96)—Creates a group when you have multiple objects selected.

Attach to Group (on page 96)—Attaches the selected objects to an existing group or to create a new group.

Detach from Group (on page 96)—Detaches the selected object from the selected.

Ungroup (on page 96)—Separates the selected group into separate objects.

Delete Objects—Deletes all selected objects.

Object Properties (on page 271)—Opens the Object Properties dialog and is used to modify the selected objects' properties.

Animation Tree Menu

Scene Components panel > Animation tree > Right-click sequence
Scene Components panel > Animation tree > Right-click object

The Animation tree menu contains a number of commands; the commands differ depending on the current object selection and grouping.

Various right-click menus are available from within the Animation tree. For example, if you right-click a sequence name you can duplicate the sequence, and if you right-click an object name you can

display the object's properties, and add new tracks.

Some of the commands are common to both menus. Here we discuss all commands across all the animation timeline right-click menus.

Interface

Right-click sequence—Used to perform various functions for the selected sequence.

- **All Sequences to Start**—Moves all sequences to their first frame.
- **All Sequences to End**—Moves all sequences to their last frame.
- **Activate**—Activates the selected sequence.
- **Create Sequence**—Creates a new empty sequence.
- **Create Snapshot**—Creates a single frame sequence based on the currently selected sequence. When objects are activated, they have the same position as at the time of creating the sequence.
- **Delete**—Deletes the selected sequence.
- **Duplicate**—Duplicates the selected sequence.
- **Reverse**—Reverses the sequences of the animation so that the first sequence becomes the last, and the last becomes the first.
- **Rescale** (on page 340)—Opens the Rescale Animation dialog and is used to rescale the animation.
- **Properties** (on page 341)—Opens the Sequence Properties dialog and is used to modify the selected sequence's properties.

Right-click object—Used to perform various functions for the selected object.

- **Tools** (on page 321)—Used to perform a number of functions including moving pivot points and removing duplicated elements.
- **Select All—**Selects all objects in the scene.

Copyright © Right Hemisphere 2006. All Rights Reserved.

- **Select Same Level Objects** (on page 139)**—**Selects all objects that are on the same hierarchy level. This is helpful when creating layers that you want to be made from objects that are at the same hierarchy level.
- **Deselect Same Level Objects** (on page 139)—Clears all objects that are on the same hierarchy level from selection.
- **Invert Selection—**Inverts the current selection.
- **Select Sub-Objects**—Selects all sub-objects of the selected object.

  Note: You can also use various keyboard shortcuts to select sub-objects and clear sub-objects from selection.

- **Show All Objects—**Displays all objects.
- **Show Selection**—Displays all selected objects.
- **Hide All Objects**—Hides all objects in the scene.
- **Hide Selection—**Hides the selected object.
- **Hide Unselected**—Hides all unselected objects.
- **Create Group** (on page 96)—Creates a group when you have multiple objects selected.
- **Attach to Group** (on page 96)—Attaches the selected objects to an existing group or to create a new group.
- **Detach from Group** (on page 96)—Detaches the selected object from the selected.
- **Ungroup** (on page 96)—Separates the selected group into separate objects.
- **Delete Objects**—Deletes all selected objects.
- **Object Properties** (on page 271)—Opens the Object Properties dialog and is used to modify the selected objects' properties.

Rescale Animation Dialog

Right-click sequence in Animation tree > Rescale

Animation s can be rescaled using the Rescale Animation dialog.

Procedure

To open the Rescale Animation dialog:

1. Right-click the default sequence of the animation you want to rescale in the Animation tree.
2. Click Rescale.

Interface

Rescale—used to rescale the animation by the selected method.

- **Offset by**—Offsets the animation by the selected number of seconds.
- **Scale by**—Scales the animation by the specified percent.
- **Set**—Used to set the length of the animation.
  - **Start**—Determines the beginning offset of the animation.
  - **End**—Determines the end seconds of the animation.

OK—Closes the dialog and applies the settings. Any changes made to the settings are saved.

Cancel—Closes the dialog. Any changes made to the settings are lost.

Help—Opens the relevant Help topic.

Sequence Properties Dialog

Animation tree > Right-click sequence > Sequence Properties

The Sequence Properties dialog is used to modify individual animation sequence properties including the sequence name, selecting the frames per second, and the sequence start and end frames.

Note: You can also edit sequences via the Edit Sequence dialog (on page 257).

Interface

Name—The name of the selected animation sequence.

Start—Determines the number of the frame where the animation sequence begins.

End—Determines the number of the frame where the animation sequence ends.

FPS—Determines the frames per second, that is, the number of frames of an animation sequence that are displayed every second. This setting reflects on the playback system as various film, computer, and TV playback systems differ.

Note: The higher the frame rate, the more processing power and system bandwidth are required.

OK—Closes the dialog and saves the settings.

Cancel—Closes the dialog. Any changes made to the settings are lost.

Help—Opens the relevant Help topic.

Layers Panel Menu

Layers panel > Right-click layer
Layers panel > Layer > Right-click object

The Layers panel menu contains a number of commands used to control the layers and the objects within the layers; the commands differ depending on the current layer or object selection and grouping.

Interface

Add Selected Objects—Adds the selected objects in the scene to the layer.

Remove All Objects—Removes all the objects from the selected layer. This command does not delete the objects from the scene.

Duplicate—Duplicates the selected layer and all the objects within the layer.

Delete—Deletes the selected layer and the objects from the layer. This command does not delete the objects from the scene.

Selectable—Allows you to select the objects in the layer.

Rename—Used to rename the selected layer or object.

Properties (on page 342)—Opens the Layer Properties dialog and is used to modify the selected layers' properties.

Tools (on page 321)—Used to perform a number of functions including moving pivot points and removing duplicated elements.

Select All—Selects all objects in the scene.

Copyright © Right Hemisphere 2006. All Rights Reserved.

Invert Selection—Inverts the current selection.

Select Sub-Objects—Selects all sub-objects of the selected object.

Note: You can also use various keyboard shortcuts (on page 355) to select sub-objects and clear sub-objects from selection.

Show All Objects—Displays all objects.

Show Selection—Displays all selected objects.

Hide All Objects—Hides all objects in the scene.

Hide Selection—Hides the selected object.

Hide Unselected—Hides all unselected objects.

Delete Objects—Deletes all selected objects.

Remove From Layer—Removes the selected object from the layer.

Object Properties (on page 271)—Opens the Object Properties dialog and is used to modify the selected objects' properties.

Layer Properties Dialog

Layers panel > Right-click layer > Layer Properties
Double-click layer in Layers panel

The Layer Properties dialog is used to modify layer properties including the layer name and and associated comments.

Interface

Name—Used to edit the layer's name.

Description—Used to edit the layer's description.

OK—Closes the dialog. Any changes made to the settings are saved.

Apply—Applies the new settings and leaves the dialog open.

Cancel—Closes the dialog. Any changes made to the settings are lost.

Help—Opens the relevant Help topic.

Steps Panel Menu

Steps panel > Right-click step

The Steps panel menu contains a number of commands used to control the steps including viewing, arranging, activating, and renaming steps, and updating the step thumbnails.

Note that the thumbnail that is displayed for each step is the last frame of the last animation defined in the sequence list for the step.

Interface

Sort—Used to arrange steps in the Steps panel list.

- **By Name—**Arranges steps by name in ascending or descending order depending on your selection.

- **By Creation Time—**Arranges steps by time in ascending or descending order depending on your selection.
- **Ascending—**Arranges steps in ascending order by name or time depending on your selection.
- **Descending—**Arranges steps in descending order by name or time depending on your selection.

Play—Plays the selected step in the selected viewport.

Delete—Deletes the selected step.

Update Step—Updates the selected step with the current render and viewport settings.

Properties (on page 292)—Opens the Step Properties dialog and is used to modify the selected step's properties.

Copyright © Right Hemisphere 2006. All Rights Reserved.

Status Bar

Menu bar > View > Status Bar

The status bar is located at the very bottom Deep Exploration interface. It displays various information including:

- The time taken to refresh the scene (on page 206) in frames per second (FPS).
- A message icon if there are status, warning, or error messages (on page 207) relating to the current file.
- A textures icon if textures have been applied to any materials.
- The name of the current display renderer (on page 209).

Other information is also displayed depending on the viewport selection. For example, if no objects are selected, the time taken to open the file is displayed. If an object is selected, the number of polygons and vertices of that object are displayed.

You can display message details via the message icon, and you can select other display renderers via the display renderer icon.

Interface



Status bar with no viewport selection
A: File loading time
B: Viewport refresh rate
C: Message icon
D: Textures icon
E: Display renderer icon



Status bar with object selected
A: Name and properties of selected object

Customizing the User Interface

You can rearrange the components of the user interface. Components can be resized, moved, floated, docked, and closed to place the most frequently used components close to hand, similar to the functionality in most Windows applications. You can also customize the display of toolbars and customize the colors used in the scene display.

Customization of the user interface can help to maximize the work-space for greater productivity, and to establish your corporate usage standards and the 'look and feel' of the application.

The 'customize' functionality includes:

- Viewports (on page 61) can be resized.
- The Explorer bar (on page 241) can be resized horizontally.
- The menu bar (on page 199) and toolbars (on page 294) can be docked at the top, bottom, left, or right of the viewports.
- Controls (on page 253) can be docked at the top or bottom of the viewports.
- Customizing toolbar button display; using the vertical 'move' bars to the right of the toolbars, you can display only the tools you need.
- Various panels including the Information bar, Scene tree, and Display Settings can be docked at the top, bottom, left, or right of the viewports.
- Set components to display automatically (on page 207) if a file includes functionality that relates to the component.
- Customizing menu commands, toolbars, ScreenTips, and shortcut keys. These procedures are identical to Windows functionality and as such, are not described here.

Procedures

To display the controls:

With the control displayed, do one of the following:

- Choose View > Controls and Toolbars on the menu bar, and then click the control you want to display.
- Right-click the menu bar and click the control you want to display.
- Open the Customize Layout dialog (on page 207), on the Controls tab select the check box for the control you want to display, and then click **OK**.

Note: The Animation Timeline (on page 257) can also be displayed by clicking the Edit Keyframes button  wherever it is displayed. The audio and video controls are automatically displayed when a file of that type is opened.

To hide the controls:

With the control hidden, do one of the following:

- Choose View > Controls and Toolbars on the menu bar, and then click the control you want to hide.
- Right-click the menu bar and click the control you want to hide.
- Open the Customize Layout dialog, on the Controls tab clear the check box for the control you want to hide, and then click **OK**.

Copyright © Right Hemisphere 2006. All Rights Reserved.

To display the toolbars:

With the toolbar displayed, do one of the following:

- Choose View > Controls and Toolbars on the menu bar, and then click the toolbar you want to display.
- Right-click the menu bar and click the toolbar you want to display.
- Open the Customize Layout dialog, select the check boxes for the toolbars you want to display on the relevant tabs, and then click **OK**.

To hide the toolbars:

With the toolbar hidden, do one of the following:

- Choose View > Controls and Toolbars on the menu bar, and then click the toolbar you want to hide.
- Right-click the menu bar and click the toolbar you want to hide.
- Open the Customize Layout dialog, select the check boxes for the toolbars you want to hide on the relevant tabs, and then click **OK**.

To customize toolbar buttons:

1. Click the toolbar's vertical customize bar arrow .
2. Choose **Add or Remove Buttons > Standard**.
3. Do one of the following:
   - Click the name of the button you want to remove or add.
   - Move the buttons to the order you want.
   - Click **Reset Toolbar** to restore the toolbar to its original layout.

Docking Components

When docking components, the component docks immediately once a 'dockable' location becomes available and you can then either leave it in that location or move it to another. Docked components are displayed with a vertical 'move' bar to the left of the component. Floating components are displayed with a title bar and can be dynamically resized. The examples below shows the Standard toolbar as it may be seen docked and then floating over the viewport.

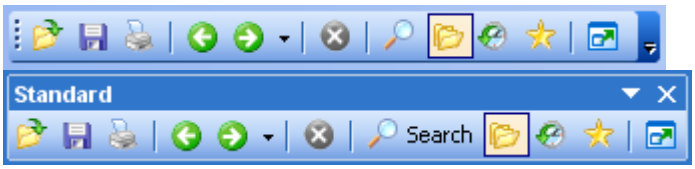

Standard toolbar: docked / floating

Resizing Components

Toolbars are minimized automatically when the application interface is minimized. When a toolbar is minimized, certain tools may be hidden from view and the vertical customize bar displays a double arrow . Clicking these arrows displays the hidden tools.

When more than one viewport is displayed, you can dynamically adjust the viewport windows' proportions. Note that this feature does not allow you to define new layouts.

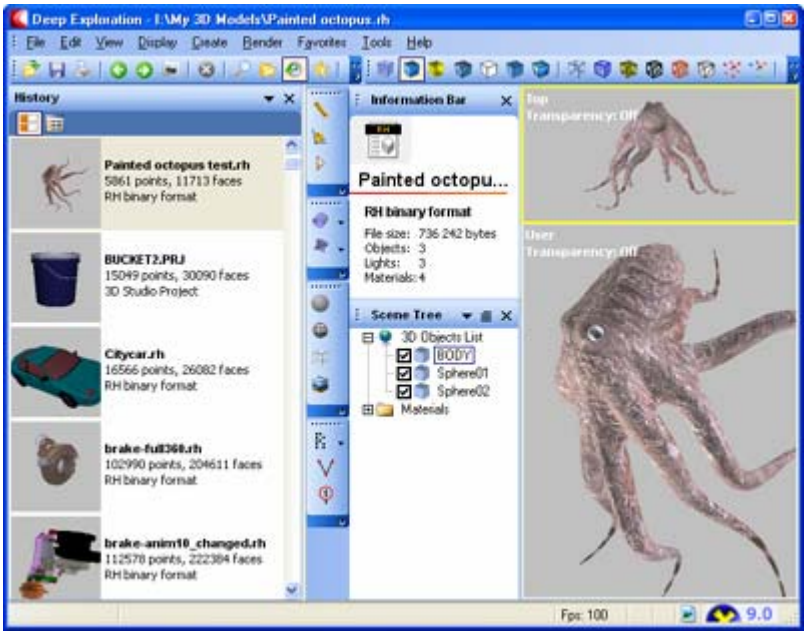

User interface: History list, docked toolbars, Information bar, Scene tree, resized viewports

Procedures

To display a component, do one of the following:

- Click **View** on the menu bar, and then choose the name of the component that you want to display.
- Right-click the menu bar and click the name of the component that you want to display.
- Open the Customize Layout dialog, select the component's check box on the relevant tab, and then click **OK**.

To close a components, do one of the following:

- Click **View** on the menu bar, and then choose the name of the component that you want to close.
- Right-click the menu bar and click the name of the component that you want to close.
- Open the Customize Layout dialog, clear the component's check box on the relevant tab, and then click **OK**.
- Click **Close**  in the top, right corner of the component.

To float a component, do one of the following:

- Drag the component by it's 'move' bar  to the floating location you want.

Copyright © Right Hemisphere 2006. All Rights Reserved.

- Double-click the floating component's title bar. The component is moved to its previous floating location.

Note: When you move a docked component, the location and size of other components can change. Pressing CTRL while moving a floating component causes that component to remain floating and not become docked.

To dock a component, do one of the following:

- Drag the component by it's title bar to the dockable location you want.
- Double-click docked component 's title bar. The component is moved to its previous docked location.

To resize a floating component vertically:

1. Move the cursor over the top or bottom edge of the component. The cursor changes to a double arrow.
2. Drag the cursor to increase or decrease the height of the component.

To resize a floating component horizontally:

1. Move the cursor over the left or right edge of the component. The cursor changes to a double arrow.
2. Drag the cursor to increase or decrease the width of the component.

To resize a docked component horizontally:

1. Move the cursor over the right edge of the component. The cursor changes to a double arrow.
2. Drag the cursor to increase or decrease the width of the component.

To resize component both vertically and horizontally:

1. Move the cursor over the intersection of the components. The cursor changes to a crossed arrow.
2. Drag the cursor to increase and decrease the height and width of the components.

To resize the viewport windows:

1. Move the cursor over the top, bottom, left, or right edge of a viewport. The cursor changes to a double arrow.
2. Drag the cursor to increase or decrease the width or height of the viewport. All viewport windows are resized.

To reset the viewport windows to the default layout:

Choose **Views > Viewports** and then select the layout again.

External Application Plugins

Certain plugins must be installed to enable you to work with external application file formats. For example, you must install the 3ds max DCOM plugin to work with .max files.

This section describes all the information you need to install any external application plugins that may be required when working with particular file formats.

Note: Please note that in order to work with certain other file formats, the related external application must be installed. For example, you must install 3ds max to work with .max files. Further information on file formats is available from the supported file format appendices.

Copyright © Right Hemisphere 2006. All Rights Reserved.

3ds max DCOM Plugin

Support for .max files is based on Discreet's 3ds max DCOM technology. This requires the 3ds max DCOM plugin to be able to 'call' a local or remote instance of 3ds max and open .max files.

DCOM stands for Distributed Component Object Model, an extension of the Component Object Model (COM) that allows COM components to communicate across network boundaries. Traditional COM components can only perform interprocess communication across process boundaries on the same computer. DCOM uses the RPC mechanism to transparently send and receive information between COM components (that is, clients and servers) on the same network. DCOM was first made available in 1995 with the initial release of Windows NT4.

DCOM serves the same purpose as IBM's DCOM protocol, which is the most popular implementation of CORBA. Unlike CORBA, which runs on many operating systems, DCOM is currently implemented only for Windows.

If you try to open a .max file and the plugin is not yet installed, you are advised of this and you can choose to install the plugin either automatically or manually. We recommend installing the plugin automatically. After the plugin is installed, you are able to work with .max files (on page 444).

Procedures

To install the plugin automatically:

1. Click a 3ds max file in Deep Exploration. You are advised that the plugin is not installed.
2. Click **OK**. The 3ds max DCOM Plugin Installation dialog is displayed.
3. Click **Browse**, navigate to and select the path to the 3ds max executable folder that you require. For example, C:\3dsmax7.
4. Click **OK**.
5. Do one of the following:
   - Ensure the Local instance option is selected if you are installing to a local instance of 3ds max.
   - Select the Remote instance option and enter the server name on which 3ds max is installed, if you are installing to a remote instance of 3ds max.
5. Click **Automatic**. An instance of 3ds max is opened, the plugin is registered, and then 3ds max closes.

   Note: If you are installing the plugin for 3ds max version 6 or later, an error message is displayed. This is normal and is part of the procedure.
6. Do one of the following:
   - Click **Don't Send** and then click **OK** if you are using 3ds max version 6 or later.
   - Click **OK** if you are using 3ds max version 5 and earlier.
   - Click **OK** if you are using 3ds max version 8 to close the Deep Exploration warning dialog.

The 3ds max file opens and the 3ds max instance runs in the background of Deep Exploration.

To install the plugin manually:

1. Click a 3ds max file in Deep Exploration. You are advised that the plugin is not installed.
2. Click **OK**. The 3ds max DCOM Plugin Installation dialog is displayed.
3. Select the 'Install manually' check box.
4. Click **Manual**.
5. Ensure Deep Exploration is closed.

6. Navigate to C:\Program Files\Right Hemisphere\Deep Exploration\plugins.
7. Delete the $cache$.p file.
8. Do one of the following:
   - If you are installing the plugin for 3ds max 5 or earlier, copy the 3de_srv.gup file from Deep Exploration's plugins folder to the 3ds max plugins folder.
   - If you are installing the plugin for 3ds max 6 or later, copy the 3de_srv.gup6 file from Deep Exploration's plugins folder to the 3ds max plugins folder and rename the file to 3de_srv.gup.
9. Start 3ds max.
10. Open the Utility Panel and click the **More** button.
11. Click **COM/DCOM Server Control** and then click **OK**.
12. Do one of the following:
    - Click **Register** if the command panel displays a Register button.
    - Click **Close** if the command panel displays an Unregister button.

3ds max should now be registered as a DCOM server and an instance can be used from Deep Exploration.

13. Start Deep Exploration and locate the 3ds max file you want to view.
14. Right-click the 3ds max file and click **Import Options**.
15. Click **Installation Options**.
15. Ensure the correct version and location of 3ds max is selected in the Import Properties dialog.

Important Note: If you have difficulty with the installation, run the command line: c:\3dsmax7\3dsmax.exe -unregistermax3dx, then re-register as described in step 12.

Copyright © Right Hemisphere 2006. All Rights Reserved.

Command Line Arguments

Various command line arguments can be used to perform the following operations:

- Start the application and open a specific file.
- Start the application, print a file, and then exit the application.
- Start the application and browse a specific folder.
- Start the application and display a slide show.
- Start the application in the Standard display mode.
- Start the application in the Full-screen display mode.
- Start the application in the View display mode.

Command Line Argument Rules

The following rules apply to command line arguments:

- The correct location of Deep Exploration must always be specified.
- If any file name includes spaces, you must enclose the file path in quotation marks. For example, "C:\My Documents\1.cob".
- If no command line argument is given, the application starts with the 'browse' folder as the folder that was last browsed.

Open a File

You can start Deep Exploration and open a specific file using a simple command line argument. The syntax is:

```
"Deep Exploration.exe" "[directory\file name]"
```

For example, the following argument starts Deep Exploration and opens the file 'image.rh' located in 'C:\My Documents\temp':

```
"C:\Program Files\Right Hemisphere\Deep Exploration\Deep Exploration.exe"
"C:\My Documents\temp\image.rh"
```

Print a File

You can start Deep Exploration, print a file, and then exit the application using a command line argument that includes the '/print' switch. The syntax is:

```
"Deep Exploration.exe" "[directory\file name]" [switch]
```

For example, the following argument starts Deep Exploration, prints the file 'image.rh' located in the 'C:\My Documents\temp' folder, and then exits Deep Exploration:

```
"C:\Program Files\Right Hemisphere\Deep Exploration\Deep Exploration.exe"
"C:\My Documents\temp\image.rh" /print
```

Browse a Folder

You can start Deep Exploration and browse a specific folder using a simple command line argument. The syntax is:

```
"Deep Exploration.exe" "[directory]"
```

For example, the following argument starts Deep Exploration and browses the 'C:\My Documents\temp' folder:

```
"C:\Program Files\Right Hemisphere\Deep Exploration\Deep Exploration.exe"
"C:\My Documents\temp"
```

Display a Slide Show

You can start Deep Exploration and display a slide show using a simple command line argument that includes the '/slideshow' switch. The syntax is:

```
"Deep Exploration.exe" "[directory]" [switch]
```

For example, the following argument starts Deep Exploration and displays the slide show located in the 'C:\My Documents\temp' folder:

```
"C:\Program Files\Right Hemisphere\Deep Exploration\Deep Exploration.exe"
"C:\My Documents" /slideshow
```

Start in Standard Mode

You can start Deep Exploration in the Standard display mode (on page 76) using a simple command line argument that includes the '/browsemode' switch. The syntax is:

```
"Deep Exploration.exe" [switch]
```

For example, the following argument starts Deep Exploration in Standard display mode:

```
"C:\Program Files\Right Hemisphere\Deep Exploration\Deep Exploration.exe"
/browsemode
```

Start in Full-Screen Mode

You can start Deep Exploration in Full-screen display mode (on page 76) using a simple command line argument that includes the '/fullscreen' switch. The syntax is:

```
"Deep Exploration.exe" "[directory]" [switch]
```

For example, the following argument opens Deep Exploration in Full-screen mode with the current directory set to 'C:\Temp':

```
"C:\Program Files\Right Hemisphere\Deep Exploration\Deep Exploration.exe"
"C:\Temp" /fullscreen
```

Copyright © Right Hemisphere 2006. All Rights Reserved.

Start in View Mode

You can start Deep Exploration in View mode using a simple command line argument that includes the '/viewmode' switch. That is, with all folders, panels, and windows hidden. The syntax is:

```
"Deep Exploration.exe" "[switch]"
```

For example, the following argument opens Deep Exploration and hides all folders, panels, and windows:

```
"C:\Program Files\Right Hemisphere\Deep Exploration\Deep Exploration.exe"
/viewmode
```

Keyboard Shortcuts

This section shows the pre-assigned keyboard shortcuts; keyboard alternatives to program functions. It also describes any shortcuts that can be accessed using the mouse buttons.

If a keyboard shortcut is available for a command, it is displayed to the right of the command name on the menu.

Mastery of these shortcuts is the difference between an average user and a 'Power User'. We strongly recommend you practice these shortcuts as they are explained in the tutorials, and wherever possible in your own projects.

Copyright © Right Hemisphere 2006. All Rights Reserved.

2D Navigation Shortcuts

These are the pre-assigned keyboard shortcuts for 2D navigation.

User Interface Function	Keyboard Shortcut
Pan image	Click+drag mouse
Restore to default view	MULTIPLICATION SIGN (*)
Zoom in (magnify image)	PLUS SIGN (+)
Zoom out (reduce image magnification)	MINUS SIGN (-)
Zoom to extents (fit image to viewport/screen)	CTRL+PLUS SIGN (+)

3D Navigation Shortcuts

These are the pre-assigned keyboard shortcuts for 3D navigation.

User Interface Function	Keyboard Shortcut
Roll camera (move camera around viewing axis)	SHIFT+drag
Orbit scene (move camera around focal point)	Drag mouse
Pan scene (rotate camera around vertical axis)	LEFT / RIGHT ARROW
View from different angle (move camera laterally/vertically)	Left+right-click+drag Middle-click+drag
Truck in (move camera into scene to view more closely) Note: The focal point is a fixed distance from the camera.	UP ARROW
Truck out (move camera out from scene to view more distantly) Note: The focal point is a fixed distance from the camera.	DOWN ARROW
Zoom in (narrow the camera angle (FOV) to magnify scene)	Right-click+drag into scene PLUS SIGN (+) IntelliMouse
Zoom out (widen camera angle (FOV) to reduce scene magnification)	Right-click+drag out from scene MINUS SIGN (-) IntelliMouse
Zoom to extents (fit scene to viewport/screen)	CTRL+PLUS SIGN (+)
Restore to default camera view	MULTIPLICATION SIGN (*)

Copyright © Right Hemisphere 2006. All Rights Reserved.

Display Menu Shortcuts

These are the pre-assigned keyboard shortcuts for the Display menu.

User Interface Function	Keyboard Shortcut
Bounding Box render mode	CTRL+1
Transparent Bounding Box render mode	CTRL+2
Vertices render mode	CTRL+3
Wireframe render mode	CTRL+4
Solid render mode	CTRL+5
Transparent render mode	CTRL+6
Solid Wireframe render mode	CTRL+7
Transparent Wireframe render mode	CTRL+8
Toggle scene bounding box	CTRL+B
Toggle back-facing geometry	CTRL+H
Toggle vertices	CTRL+I
Toggle cameras and lights	ALT+L
Toggle cross section	ALT+X

File Shortcuts

These are the pre-assigned keyboard shortcuts for file procedures.

User Interface Function	Keyboard Shortcut
Add the current file to your favorites list	CTRL+D
Copy a rendered scene to the clipboard as a bitmap	CTRL+SHIFT+C
Copy the selected file	CTRL+C
Clears all files from selection	CTRL+N
Cut the selected file	CTRL+X
Delete the selected file or folder	DELETE
Delete the selected file or folder and bypass the confirmation	CTRL+DELETE
Delete the selected file or folder and bypass the recycle bin	SHIFT+DELETE
Generate thumbnail files for the selected folder	F4
Load a file and open the Import Properties dialog	ALT+click file
Load the next file in the active folder	ALT+RIGHT ARROW
Load the next file and start a slide show	Click file+CTRL+RIGHT ARROW
Load the previous file in the active folder	ALT+LEFT ARROW
Load the previous file and start a slide show	Click file+CTRL+LEFT ARROW
Open the Open dialog	CTRL+O
Open a folder or archive file	Double-click folder or archive file
Paste the selected file	CTRL+V
Refresh the File list display	F5
Reload the current file	CTRL+F5
Reload the current file and open the Import Properties dialog	CTRL+ALT+F5
Rename the selected file or folder	F2
Selects all files	CTRL+A
Stop a slide show	CTRL+LEFT ARROW as slide show in progress ESC as slide show in progress
Update the thumbnail file	CTRL+U

Copyright © Right Hemisphere 2006. All Rights Reserved.

General Shortcuts

These are the pre-assigned keyboard shortcuts for general procedures within the main user interface.

User Interface Function	Keyboard Shortcut
Activate the next window	TAB
Activate the previous window	SHIFT+TAB
Display the User Reference (online Help)	F1
Display right-click menus	Right-mouse click
Toggle between Browse and View modes	ENTER
Toggle Full-screen and Standard display modes	F11
Redo last command that was undone	CTRL+Y
Return to Standard display mode	ESC
Toggles Search panel	CTRL+E
Undo last command	CTRL+Z

Grid Menu Shortcuts

These are the pre-assigned keyboard shortcuts for the Grid menu (on page 210).

User Interface Function	Keyboard Shortcut
Cycle through the grid type display	CTRL+G

Copyright © Right Hemisphere 2006. All Rights Reserved.

Lights Menu Shortcuts

These are the pre-assigned keyboard shortcuts for the Lights menu.

User Interface Function	Keyboard Shortcut
Display lights from file	ALT+0
Display white lights	ALT+1
Display daylight	ALT+2
Display hard lights	ALT+3
Display colored lights red/green	ALT+4
Display colored lights blue/green	ALT+5
Display blue lights	ALT+6
Display marsiano (red) lights	ALT+7
Display single white light from eye	ALT+8
Turn all lights off	ALT+9
Apply more brightness	SHIFT++]
Apply less brightness	SHIFT+- [
Restore original brightness	HOME
Toggle specular lights	ALT+S

Materials Menu Shortcuts

These are the pre-assigned keyboard shortcuts for the Materials menu.

User Interface Function	Keyboard Shortcut
Toggle default material	CTRL+M
Toggle textures	CTRL+T

Copyright © Right Hemisphere 2006. All Rights Reserved.

Object Editing Shortcuts

These are the pre-assigned keyboard shortcuts for object editing procedures.

User Interface Function	Keyboard Shortcut
Copy selected objects using Move tool	Select objects+Move+CTRL+drag
Copy selected objects using Rotate tool	Select objects+Rotate+CTRL+drag
Copy selected objects using Scale tool	Select objects+Scale+CTRL+drag

Scene Components Panel Shortcuts

These are the pre-assigned keyboard shortcuts for the Scene Components panel (on page 266).

User Interface Function	Keyboard Shortcut
Open the Materials Properties dialog	Double-click material in Scene tree
Open the Object Properties dialog for selected object	Double-click object in Scene tree Select object+ALT+ENTER
Toggle selected object and sub-object display	Select object+H
Edit object or material name	Click name of selected object or material in Scene tree F2

Copyright © Right Hemisphere 2006. All Rights Reserved.

Selection Shortcuts

These are the pre-assigned keyboard shortcuts for selection procedures.

User Interface Function	Keyboard Shortcut
Select an object	Click object icon in Scene tree Click object in viewport
Select all sub-objects of the selected object	ALT+click object icon in Scene tree
Clear parent object and all sub-objects from selection	CTRL+ALT+click object icon in Scene tree
Select multiple objects and clear multiple objects from selection	CTRL+click objects in Scene tree CTRL+click objects in viewport
Clear multiple objects from selection	ALT+drag over objects in viewport
Select multiple objects	CTRL+drag over objects in viewport
Select a material	SHIFT+click over objects in viewport
Display object selection commands	CTRL+right-click+drag over objects in viewport
Open Select Objects dialog	F3

Smoothing Menu Shortcuts

These are the pre-assigned keyboard shortcuts for the Smoothing menu.

User Interface Function	Keyboard Shortcut
Toggle smoothing	CTRL+S

Copyright © Right Hemisphere 2006. All Rights Reserved.

Views Menu Shortcuts

These are the pre-assigned keyboard shortcuts for viewports (on page 61).

User Interface Function	Keyboard Shortcut
Orthographic top view	T
Orthographic bottom view	B
Orthographic aft (back) view	A
Orthographic front view	F
Orthographic right view	R
Orthographic left view	L
Perspective view	P
Toggle between single viewport and last multiple viewport display	F12
View to active object	Select object+V
View to visible objects	V

Hints and Tips

This section contains hints and tips on using Deep Exploration.

2D Images

This section contains hints and tips on working with 2D images.

Alpha Channel

If you do not want an image to display the alpha channel, go to the 2D View tab (on page 224) in the Options dialog and select None in the Grid Size field.

Exploded Animations

This section contains hints and tips on working with exploded animations.

Editing Keyframes

After exploding objects, you can move the individual objects along their axes at end of the animation, placing them in different positions to enhance the animation. This can be done by editing the objects via the Edit Keyframes tool (on page 101) or the timeline (on page 101).

Copyright © Right Hemisphere 2006. All Rights Reserved.

Processing Large Files

Large amounts of memory are required for processing very large files. For example, if you are rendering large files using the Vector Illustration tool or reducing the polygon count of larger files.

The 3GB switch can be enabled so that 3GB of memory is available to Deep Exploration to process these larger sized files. With this switch disabled, only 2 GB of memory is available for processing.

Note that this procedure is only supported with the Windows XP operating system.

Procedures

To see if the 3GB switch is enabled:

1. Open a large file into Deep Exploration.
2. Render the file using the Vector Illustration tool.
3. Ensure the memory usage in the taskbar indicates that Deep Exploration is consuming more that 2GB of memory.

To enable the 3GB switch:

Set the following parameter in C:\boot.ini on your computer as follows:

Before

```
[boot loader]
timeout=30
default=multi(0)disk(0)rdisk(0)partition(1)\WINDOWS
[operating systems]
multi(0)disk(0)rdisk(0)partition(1)\WINDOWS="Microsoft Windows XP
Professional RU" /noexecute=optin /fastdetect
```

After

```
[boot loader]
timeout=30
default=multi(0)disk(0)rdisk(0)partition(1)\WINDOWS
[operating systems]
multi(0)disk(0)rdisk(0)partition(1)\WINDOWS="Microsoft Windows XP
Professional RU" /noexecute=optin /fastdetect /3GB
```

Rotating Objects

This section contains hints and tips on working with object rotation.

Gimbal Lock

Gimbal lock is the phenomenon of two rotational axis of an object pointing in the same direction; it occurs when animating an object with a rotational matrix known as Eular (pronounced Oiler) angles, and is a general limitation of that type of rotational matrix. Simply put, it means objects do not rotate in the way you think they should.

Eular Angles

Any system that uses Eular angles, including 3ds max, Maya, LightWave, and SOFTIMAGE, will have difficulties with gimbal lock. This is because Eular angles evaluate each axis independently in a set order. In the case of 3ds max, that order is generally X,Y,Z (you can however, change the order to whatever you would like). This means that firstly the object travels down the X axis. When that operation is complete it then travels down the Y axis, and finally the Z axis. The problem with gimbal lock occurs when you rotate the object down the Y axis, say 90 degrees. Since the X component has already been evaluated it doesn't get carried along with the other two axis, and the X and Z axis end by being pointed down the same axis.

If you are going to use Eular angles (note that every 3D application has them somewhere) you will have difficulties with gimbal lock. The only advantage to using Eular angles is that they are much easier for an artist to read and conceptualize than a Quaternion rotation.

Working with Eular Angles

Remember that an Eular angle, no matter what you call it (Local Eular, World Eular, XYZ Bezier) is still an Eular angle and as such, has severe limitations.

- If your object only needs to rotate along one axis, change the order of axis to match. That is, if you are rotating down the Y axi,s make the order of axis Y,Z,X.
- If you are rotating down two axis, change the order of axis to correspond with the first and last axis. That is, if you are rotating down the X and Y axis, change the order of axis to X,Z,Y.
- If you are rotating down all three axis, be aware that there will be areas where gimbal lock will occur. Try to place those areas far enough out of the way that they will not be a problem, or separate the axis with an additional node (even this sometimes may not be enough).
- In certain specific cases, the parent of an object can actually gimbal lock it's child. Try placing an extra Quat node in the chain between these two nodes. You can see a good example of this in 3ds max if you link anything using Eular angles to a Biped. One workaround is to first link a dummy with TCB controllers (Quat) to the biped, then link your chain to the dummy.
- The first axis evaluated will always happen in the objects local coordinate orientation.
- The last axis evaluated will generally happen in a world coordinate orientation.

Quaternion Rotations

Quaternion (Quat) rotations are far more powerful and robust than Eular angles. In 3ds max, TCB controllers use Quaternion math to find their orientation; they evaluate all three axis at the same time to find a direction to travel, and a fourth value (the w component or, 'up' vector) to tell the matrix how far to travel. Therefore, gimbal lock is never a prpblem with Quat rotations as all three axis are updated at the same time. However, Quats rotations are far more complicated to read and conceptualize than an Eular angle.

RotationScript controllers in 3ds max are Quat rotations which makes them far more powerful than Eular angles and expressions but they are also much more difficult to use and understand.

Copyright © Right Hemisphere 2006. All Rights Reserved.

Reducing Models

This section contains hints and tips on utilizing the polygon reduction settings.

Healing Models

If you have healed a model, you can lessen the reduction processing time by clearing the 'Prepare Options' check boxes as these tasks are performed during the healing process. Clearing these options significantly reduces the processing time for large models.

Cracks and Holes

During reduction, cracks and holes may appear in a model if vertices that are different are close to each other, and the polygon count is low. Joining vertices can help to remove these by combining all vertices that are within a certain distance from each other into one. This option works equally well on large and small models.

In the examples below, the model has been reduced by 20%, without and with combining the vertices. Notice how cracks and holes appear in the model when the vertices are not combined.



Without combining vertices / With combining vertices

Geometric Artifacts

If geometric artifacts remain after the reduction process, try normalizing the meshes when you reduce the model. For example, geometric artifacts may be visible after reducing model that have meshes very small meshes, with a bounding box size that is less than 0.01.

Normalizing small models where the meshes are located far apart in a scene, may produce poor results. The examples below show a scene in which the objects are far apart. The second example shows object 1 reduced by 20% with normalizing the meshes, while the third example shows object 1 reduced by 20% without normalizing. Notice how the object appears disported where the meshes have been normalized.

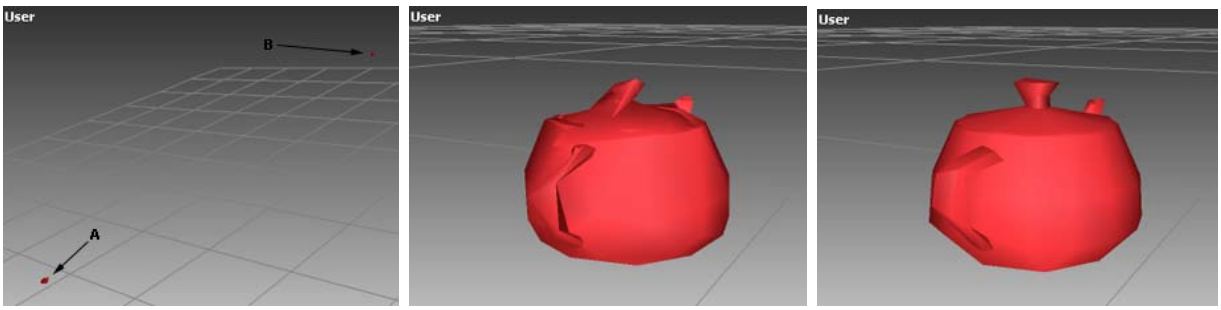

Objects far apart in a scene / Reduction 20% normalizing meshes / Reduction 20% without normalizing meshes

Uninstalling Deep Exploration

When you uninstall the application, if any individual modules have been installed, they are also removed.

The uninstall process removes information from the folder where the application is installed, including any personal shader, material, and modified files. It does not remove any of the registry settings, the file history, favorites, thumbnails, or any files located within the 3D Model folder.

Note: Any user can uninstall the application.

Procedure

To uninstall the application and modules:

1. Click **Start** in the Windows taskbar.
2. Select **All Programs > Right Hemisphere > [application] > Uninstall**.
3. Follow the instructions as they appear on your screen.

Note: You can also uninstall the application via the Control Panel. Please see your Windows documentation for further information.

Copyright © Right Hemisphere 2006. All Rights Reserved.

Appendix A: 2D File Formats

The following 2D file formats are supported by Deep Exploration CAD and Standard Editions and Deep Server. This list is organized alphabetically by file format.

File Format	Type	Extension	View/ Import	Export	Version/Notes
Adobe Encapsulated PostScript	Image	EPS		Yes (on page 376)	Version 2.0
Adobe Illustrator Vector Graphic	Image	AI	Yes (on page 377)	Yes (on page 378)	Version 2.0
Adobe Photoshop Document	Image	PSD	Yes (on page 379)		
Adobe Portable Document 3D	Image /Scene	PDF		Yes (on page 380)*	Creates a PDF document with 3D content. *Requires the PDF Publishing Module to be installed.
Autodesk Animator Graphic	Image	CEL	Yes (on page 383)		
DirectX DirectDraw Surface	Image	DDS	Yes (on page 384)		
EA/Amiga Interchange File Format	Image	IFF	Yes (on page 385)		
Flexible Precision Buffer Map	Image	FLX	Yes (on page 386)		
FLIC Animator Animation (flc)	Image	FLC	Yes (on page 387)		
FLIC Animator Animation (fli)	Image	FLI	Yes (on page 388)		
Graphics Interchange Format	Image	GIF	Yes (on page 389)		
JPEG 2000 J2K	Image	J2K	Yes (on page 390)		
JPEG 2000 JP2	Image	JP2	Yes (on page 391)	Yes (on page 392)	
JPEG 2000 JPC	Image	JPC	Yes (on page 393)	Yes (on page 394)	
JPEG 2000 JPX	Image	JPX	Yes (on page 395)		
JPEG Image	Image	JPG, JPEG	Yes (on page 396)	Yes (on page 397)	
Maya Interchange File Format	Image	IFF	Yes (on page 398)	Yes (on page 399)*	*Requires Maya to be installed.
OpenEXR Bitmap	Image	EXR	Yes (on page 400)	Yes (on page 401)	
Portable Network Graphics	Image	PNG	Yes (on page 402)	Yes (on page 403)	
Portable Pixelmap Graphic	Image	PPM	Yes (on page 404)	Yes	

Publisher's Paintbrush Bitmap Graphic	Image	PCX	Yes (on page 405)		
Radiance Picture	Image	HDR	Yes (on page 406)		
Scalable Vector Graphic	Image	SVG	Yes (on page 407)	Yes (on page 408)	
Silicon Graphics Image	Image	RGB, RGBA, INT, INTA	Yes (on page 409)		
ShockWave Flash Object	Image	SWF		Yes (on page 410)	Must be viewed with Internet Explorer.
SOFTIMAGE Picture	Image	PIC	Yes (on page 411)		
Tagged Image File Format	Image	TIF, TIFF	Yes (on page 412)	Yes (on page 413)	
TGA File	Image	TGA	Yes (on page 414)	Yes (on page 415)	
Windows Bitmap Graphic	Image	BMP, DIB	Yes	Yes (on page 416)	
Windows Cursor File	Image	CUR	Yes (on page 417)		
Windows Icon File	Image	ICO	Yes (on page 418)		
Windows Run Length Encoded Bitmap	Image	RLE	Yes (on page 419)		

Copyright © Right Hemisphere 2006. All Rights Reserved.

Adobe Encapsulated Postscript Export (.eps)

You can save files to the Adobe Encapsulated Postscript (.eps) format.

The .eps format, developed by Adobe, is a standard format for importing and exporting PostScript language files in all environments. It is usually a single page PostScript language program that describes an illustration. The purpose of the .eps file is to be included as an illustration in other PostScript language page descriptions. The .eps file can contain any combination of text, graphics, and images. An .eps file is the same as any other PostScript language page description, but with some restrictions.

For further information on using files, please see Opening Files (on page 42), Importing Files (on page 43), and Saving Files (on page 56).

Adobe Illustrator Vector Graphic (.ai)

You can view Adobe Illustrator Vector Graphic (.ai) files.

This is a widely used format for the exchange of 2D objects. It supports Bezier splines as drawing objects. Bezier splines improve the modeling of natural (and some human-made) objects. It is a variation of the Adobe Encapsulated PostScript (.eps) format.

For further information on using files, please see Opening Files (on page 42), Importing Files (on page 43), and Saving Files (on page 56).

Copyright © Right Hemisphere 2006. All Rights Reserved.

Adobe Illustrator Vector Graphic Export (.ai)

You can save to the Adobe Illustrator Vector Graphic (.ai) format.

This is a widely used format for the exchange of 2D objects. It supports Bezier splines as drawing objects. Bezier splines improve the modeling of natural (and some human-made) objects. It is a variation of the Adobe Encapsulated PostScript (.eps) format.

For further information on using files, please see Opening Files (on page 42), Importing Files (on page 43), and Saving Files (on page 56).

Adobe Photoshop Document (.psd)

You can view Adobe Photoshop Document (.psd) files.

The .psd file format (Photoshop Document), developed by Adobe, is the native format used by the Adobe Photoshop application. The PSD contains image information along with layer, layer style, drop shadow and text information. You can open the PSD for editing in Photoshop and other compatible Adobe software such as Adobe InDesign but to view in standard applications the images are flattened or merged.

For further information on using files, please see Opening Files (on page 42), Importing Files (on page 43), and Saving Files (on page 56).

Copyright © Right Hemisphere 2006. All Rights Reserved.

Adobe Portable Document 3D Export (.pdf)

You can save files to the Adobe Portable Document (.pdf) format with the PDF Publishing module (on page 188). Any 3D content contained within these files is converted to the Universal 3D (.u3d) format (on page 485).

The .pdf file format (Portable Document Format), developed by Adobe, is used for representing documents in a manner that is independent of the original application software, hardware, and operating system used to create those documents. A .pdf file can describe documents containing any combination of text, graphics, and images in a device independent and resolution independent format.

Note: The .u3d format, adopted by Adobe, is required and used as the 3D publishing format in Adobe Acrobat.

For information regarding 3D interactivity within PDF documents, please see the Adobe Acrobat Professional Help delivered with Adobe Acrobat 3D.

For further information on using files, please see Opening Files (on page 42), Importing Files (on page 43), and Saving Files (on page 56).

Interface

Templates (on page 188)—Used to view and select the template on which to base the new PDF document.

- **Preview**—Displays a preview of the selected template.
- **Name**—The names of the available templates.
- **Description**—The description of the selected template.
- **Use external template**—Used to select the template on which to base the PDF document.
  - **File name**—The file name and path of the template.
  - **Browse**—Used to browse for and select the template.

Options—Used to establish additional settings.

- **Use external poster image**—Used to insert an external 2D image into the document. Otherwise, the scene is rendered to create the 2D image.
  - **File name**—The name and path of the 2D image.
  - **Browse**—Used to browse for and select the 2D image.
- **Use vector poster image**—Renders the scene as a vector illustration. Otherwise, the scene is rendered as a raster illustration.
  - **Settings** (on page 381)—Opens the Vector Illustration Settings dialog and is used to establish settings for the vector rendering.
- **Save model views to Acrobat 3D** (on page 75)—Saves all model views within the file for viewing in Acrobat 3D.
- **Activate 3D model**—Automatically activates the 3D model when the PDF document is opened. Otherwise, the rendered scene is displayed.
- **Start Adobe Acrobat after export**—Opens Adobe Acrobat and displays the PDF document after the file is saved.

Note: The Adobe application that is opened depends on what you have installed.

- **Metadata** (on page 381)—Opens the Metadata dialog and is used to establish the information displayed in the PDF document properties.

Vector Illustration Settings Dialog

Save to .pdf format > Settings > PDF Publishing tab > Settings

The Vector Illustration Settings dialog is used to establish a number of vector rendering settings including line thickness, wireframe display, and callout rendering.

Interface

Lines—Used to select various line output options for the illustration.

- **Line thickness**—Determines the thickness of rendered lines.
- **Tolerance angle**—Determines the degree of angle tolerance for all rendered outlines. If the angle between two adjacent faces is greater than this value, then the edge between these faces is treated as an outline edge.
- **Calculate intersections** (on page 137)—Draws lines along all face-face intersections. Vectors are normally calculated using triangle edges. If the lines of intersection fall outside of triangle edges where geometry or objects intersect each other, this option can be used to calculate the triangle intersections and output them as vectors.
- **Allow self-intersections**—Tests all mesh faces for intersection. Not using this option ensures only faces of different meshes are tested for intersection. For example, if two faces belonging to Mesh1 intersect, the line appears only if this option is selected. If two faces intersect, with the first face belonging to Mesh1 and the second to Mesh2, the intersection line is drawn regardless of this option setting. We recommend not using this option.
- **Remove hidden lines**—Removes lines that are hidden by the geometry. For example, a Z-buffer. This is usually what is required for rendering. However, at times you may want a see-through effect. We recommend selecting this option.
- **Show as wireframe**—Causes all edges to be treated as outline edges. The tolerance angle setting becomes redundant when this is selected.

Colors—Used to select the colors to use in the illustration.

- **Object**—Uses the object's color for the rendered lines.
- **Line**—Used to open the color selector and select a color for rendered lines. This option is only available if the Object check box is not selected.

Include callouts—Includes callouts in the vector illustration.

BOM—Used to determine if and where the BOM is placed on the illustration.

- **None**—Excludes the BOM from the illustration.
- **Bottom**—Places the BOM at the bottom of the illustration.
- **Right**—Places the BOM at the right of the illustration.

OK—Closes the dialog and applies the settings. Any changes made to the settings are saved.

Cancel—Closes the dialog. Any changes made to the settings are lost.

Help—Opens the relevant Help topic.

Metadata Dialog

Save to .pdf format > Settings > PDF Publishing tab > Metadata

The Metadata dialog is used to establish the information displayed in the document properties when a model is saved to the .pdf format.

Interface

Copyright © Right Hemisphere 2006. All Rights Reserved.

Title—The document title that is displayed in the document's Title property, and in the 'Document Title' field of the Acrobat 3D Additional Metadata dialog.

Author—The document author's name that is displayed in the document's Author property. The current user name is displayed here by default.

Subject—The subject of the scene that is displayed in the document's Subject property.

Note: This is used in the 'Description' field in the Acrobat 3D Additional Metadata dialog.

Keywords—Additional scene information that is displayed in the document's Keywords property.

Auto-generate title—Automatically displays the document's file name and extension in the document's Title property. Any text entered in the Title field is ignored.

Auto-generate subject—Automatically displays the document's file name, and associated template name in the document's Subject property. Any text entered in the Subject field is ignored.

Add parts list to keywords—The model's parts list that is displayed in the document's Keywords property. This information is displayed after any information entered in the Keywords field.

OK—Closes the dialog and applies the settings. Any changes made to the settings are saved.

Cancel—Closes the dialog. Any changes made to the settings are lost.

Help—Opens the relevant Help topic.

Autodesk Animator Graphic (.cel)

You can view Autodesk Animator Graphic (.cel) files.

The .cel file format is used in the Animator program developed by Autodesk for the animation of 2D graphics. CEL files are extensions of the FLIC file formats with a different extension and one more entry in the 'prefix data' (a kind of optional header).

For further information on using files, please see Opening Files (on page 42), Importing Files (on page 43), and Saving Files (on page 56).

Copyright © Right Hemisphere 2006. All Rights Reserved.

DirectX DirectDraw Surface (.dds)

You can view DirectX DirectDraw Surface (.dds) files.

The .dds file format was developed by Microsoft and is used in the DirectX application to store textures and cubic environment maps, both with and without mipmap levels. It can store uncompressed and compressed pixel formats.

A cubemap is a set of six images, representing what you would see from a certain location if you were to look forward, left, right, backward, up, and down. Only one of these images is displayed at a time when a cubemap file is opened. However, you can select which one you see using the 2D viewport right-click menu (on page 315).

This file format is supported by the Microsoft DirectX Texture tool (DXTex Tool), as well as some third-party tools, and by the Direct3D extensions (D3DX) library. It is the preferred file format for storing DXTn compressed data.

For further information on using files, please see Opening Files (on page 42), Importing Files (on page 43), and Saving Files (on page 56).

EA/Amiga Interchange File Format (.iff)

You can view EA/Amiga Interchange File (.iff) files.

The .iff file format (Interchange File Format) is a general purpose data storage format that can associate and store multiple types of data and is developed by Electronic Arts (EA) and Amiga. It is a generic structured file access mechanism, and is not limited to images. For example, .aiff files are audio .iff.

IFF images can have 8 or 16-bit per channel RGB, and optionally Alpha, and can optionally contain a 32-bit floating point depth map (sometimes called a Z-buffer).

For further information on using files, please see Opening Files (on page 42), Importing Files (on page 43), and Saving Files (on page 56).

Copyright © Right Hemisphere 2006. All Rights Reserved.

Flexible Precision Buffer Map (.flx)

You can view Flexible Precision Buffer Map (.flx) files.

The .flx file format (FLX) is used in Animator for the animation of 2D graphics and is developed by Autodesk. The FLX file format is a slight variation on the .flc file format to achieve more flexibility with regard to color depth.

Note: When you open a high dynamic range image (on page 149) (HDRI), resolution controls are displayed in the Information bar. These allow you to modify the image.

For further information on using files, please see Opening Files (on page 42), Importing Files (on page 43), and Saving Files (on page 56).

FLIC Animator Animation (.flc)

You can view FLIC Animator Animation (.flc) files.

The .flc file format (FLIC) is used in Animator for the animation of 2D graphics and is developed by Autodesk. The format is used in a variety of animation programs, computer games and CAD applications. FLIC formats do not support audio or video data, but instead store sequences of still image data.

The .flc file format adds configurable resolution and better compression than .fli files.

For further information on using files, please see Opening Files (on page 42), Importing Files (on page 43), and Saving Files (on page 56).

Limitations

- Import is limited to the first frame only.
- The .fli format is older and is limited to a resolution of 320×200.

Copyright © Right Hemisphere 2006. All Rights Reserved.

FLIC Animator Animation (.fli)

You can view FLIC Animator Animation (.fli) files.

The .fli file format (FLIC) is used in Animator for the animation of 2D graphics and is developed by Autodesk. The format is used in a variety of animation programs, computer games and CAD applications. FLIC formats do not support audio or video data, but instead store sequences of still image data.

The .flc file format adds configurable resolution and better compression than .fli files.

See also Opening Files (on page 42), Importing Files (on page 43), and Saving Files (on page 56).

Limitations

- Import is limited to the first frame only.
- The .fli format is older and is limited to a resolution of 320×200.

Graphics Interchange Format (.gif)

You can view Graphics Interchange Format (.gif) files.

The .gif file format is a image standard on the World Wide Web and was developed by CompuServe. The format includes compression, transparency, interlacing and storage of multiple images within a single file which allows for a primitive form of animation.

For further information on using files, please see Opening Files (on page 42), Importing Files (on page 43), and Saving Files (on page 56).

Copyright © Right Hemisphere 2006. All Rights Reserved.

JPEG 2000 J2K (.j2k)

You can view JPEG (Joint Photographics Experts Group) 2000 (.j2k) files.

The .j2k file format (J2K) is a part of the Joint Photographics Experts Group 2000 (JPEG 2000) committee standard designed to supersede the original JPEG standard. The JPEG 2000 standard makes use of new wavelet technology to allow better compression and lossless retention of images (without distortion or image integrity loss).

For further information on using files, please see Opening Files (on page 42), Importing Files (on page 43), and Saving Files (on page 56).

JPEG 2000 JP2 (.jp2)

You can view JPEG (Joint Photographics Experts Group) 2000 (.jp2) files.

The .jp2 file format (JP2) is a part of the Joint Photographics Experts Group 2000 (JPEG 2000) committee standard designed to supersede the original JPEG standard. The JPEG 2000 standard makes use of new wavelet technology to allow better compression and lossless retention of images (without distortion or image integrity loss).

The JP2 format is the most basic implementation of the JPEG 2000 standard and contains the only essential metadata such as color space information (which is essential for accurate rendering). However, this standard features extensible architecture that allows more advanced file formats to be covered under the same implementation.

For further information on using files, please see Opening Files (on page 42), Importing Files (on page 43), and Saving Files (on page 56).

Copyright © Right Hemisphere 2006. All Rights Reserved.

JPEG 2000 JP2 Export (.jp2)

You can save files to the JPEG (Joint Photographics Experts Group) 2000 (.jp2) format.

The .jp2 file format (JP2) is a part of the Joint Photographics Experts Group 2000 (JPEG 2000) committee standard designed to supersede the original JPEG standard. The JPEG 2000 standard makes use of new wavelet technology to allow better compression and lossless retention of images (without distortion or image integrity loss).

The JP2 format is the most basic implementation of the JPEG 2000 standard and contains the only essential metadata such as color space information (which is essential for accurate rendering). However, this standard features extensible architecture that allows more advanced file formats to be covered under the same implementation.

For further information on using files, please see Opening Files (on page 42), Importing Files (on page 43), and Saving Files (on page 56).

Interface

Export as grayscale—Saves the file in 8-bit grayscale format. Otherwise, standard 24-bit full-color is used.

Lossy compression—Saves the file using lossy compression. Otherwise, lossless compression is used. 'Lossy' (loss of data) compression can be used to compress .rh files; lossy compression treats two vertices that are sufficiently close to each other as one, resulting in image size and quality.

Percentage file size—Determines the size at which to save the file as a percentage of the uncompressed image. A smaller file size results in a lower quality image and a larger size results in a higher quality image.

Note: Files are saved at the smallest possible size. That is, if a file can be saved using lossless compression at a smaller file size than determined by the spinner.

JPEG 2000 JPC (.jpc)

You can view JPEG (Joint Photographics Experts Group) 2000 JPC (.jpc) files.

The .jpc file format (JPC) is a part of the Joint Photographics Experts Group 2000 (JPEG 2000) committee standard designed to supersede the original JPEG standard. The JPEG 2000 standard makes use of new wavelet technology to allow better compression and lossless retention of images (without distortion or image integrity loss).

For further information on using files, please see Opening Files (on page 42), Importing Files (on page 43), and Saving Files (on page 56).

Copyright © Right Hemisphere 2006. All Rights Reserved.

JPEG 2000 JPC Export (.jpc)

You can save files to the JPEG (Joint Photographics Experts Group) 2000 JPC (.jpc) format.

The .jpc file format (JPC) is a part of the Joint Photographics Experts Group 2000 (JPEG 2000) committee standard designed to supersede the original JPEG standard. The JPEG 2000 standard makes use of new wavelet technology to allow better compression and lossless retention of images (without distortion or image integrity loss).

For further information on using files, please see Opening Files (on page 42), Importing Files (on page 43), and Saving Files (on page 56).

Interface

Export as grayscale—Saves the file in 8-bit grayscale format. Otherwise, standard 24-bit full-color is used.

Lossy compression—Saves the file using lossy compression. Otherwise, lossless compression is used. 'Lossy' (loss of data) compression can be used to compress .rh files; lossy compression treats two vertices that are sufficiently close to each other as one, resulting in image size and quality.

Percentage file size—Determines the size at which to save the file as a percentage of the uncompressed image. A smaller file size results in a lower quality image and a larger size results in a higher quality image.

Note: Files are saved at the smallest possible size. That is, if a file can be saved using lossless compression at a smaller file size than determined by the spinner.

JPEG 2000 JPX (.jpx)

You can view JPEG (Joint Photographics Experts Group) 2000 JP2 (.jpx) files.

The .j2x file format (JPX) is a part of the Joint Photographics Experts Group 2000 (JPEG 2000) committee standard designed to supersede the original JPEG standard. The JPEG 2000 standard makes use of new wavelet technology to allow better compression and lossless retention of images (without distortion or image integrity loss).

For further information on using files, please see Opening Files (on page 42), Importing Files (on page 43), and Saving Files (on page 56).

Copyright © Right Hemisphere 2006. All Rights Reserved.

JPEG Image (.jpeg, .jpg)

You can view JPEG (Joint Photographics Experts Group) Image (.jpeg, .jpg) files.

These file formats, developed by the Joint Photographics Experts Group (JPEG) committee, are digital image formats that use compression algorithms defined in the JPEG standard - ISO 10918. The formats are primarily used in graphics and image manipulation programs and are a standard on the World Wide Web.

For further information on using files, please see Opening Files (on page 42), Importing Files (on page 43), and Saving Files (on page 56).

JPEG Image Export (.jpeg, .jpg)

You can save files to the JPEG (Joint Photographics Experts Group) Image (.jpeg, .jpg) format.

These file formats, developed by the Joint Photographics Experts Group (JPEG) committee, are digital image formats that use compression algorithms defined in the JPEG standard - ISO 10918. The formats are primarily used in graphics and image manipulation programs and are a standard on the World Wide Web.

For further information on using files, please see Opening Files (on page 42), Importing Files (on page 43), and Saving Files (on page 56).

Interface

Image Quality—Determines the quality of the output image. A higher quality image results in a larger file size and a lower quality image results in a smaller size file.

Copyright © Right Hemisphere 2006. All Rights Reserved.

Maya Interchange File Format (.iff)

You can view Maya Interchange File Format (.iff) files.

The .iff file format was originally developed by Electronic Arts (EA) and Amiga and is utilized by Maya to outputs images. IFF is a generic structured file access mechanism, and is not limited to images - for example, AIFF files are audio IFF.

IFF images can have 8 or 16-bit per channel RGB and optionally Alpha. They can also optionally contain a 32-bit floating point depth map (sometimes called a Z-buffer).

Note: The Maya application must be installed for this functionality to be enabled.

For further information on using files, please see Opening Files (on page 42), Importing Files (on page 43), and Saving Files (on page 56).

Support

- 1-24 bpp images.

Maya Interchange File Format Export (.iff)

You can save files to the Maya Interchange (.iff) format.

The .iff file format was originally developed by Electronic Arts (EA) and Amiga and is utilized by Maya to outputs images. IFF is a generic structured file access mechanism, and is not limited to images. For example, AIFF files are audio IFF. IFF images can have 8 or 16-bit per channel RGB, and optionally Alpha, and can optionally contain a 32-bit floating point depth map (sometimes called a Z-buffer).

Note: The Maya application must be installed for this functionality to be enabled.

For further information on using files, please see Opening Files (on page 42), Importing Files (on page 43), and Saving Files (on page 56).

Support

- 1-24 bpp images.

Copyright © Right Hemisphere 2006. All Rights Reserved.

OpenEXR Bitmap (.exr)

You can view OpenEXR Bitmap (.exr) files.

The .exr file format was developed by Industrial Light & Magic (http://www.openexr.com) for OpenEXR.

For further information on using files, please see Opening Files (on page 42), Importing Files (on page 43), and Saving Files (on page 56).

Support

- 16-bit floating-point, 32-bit floating-point, and 32-bit integer pixels.
- Extensibility to include new compression codec's and image types.
- High dynamic range image (HDRI) and color precision.

  Note: When you open a high dynamic range image (on page 149) (HDRI), resolution controls are displayed in the Information bar. These allow you to modify the image.

- Multiple lossless image compression algorithms.

OpenEXR Bitmap Export (.exr)

You can save files to the OpenEXR Bitmap (.exr) format.

The .exr file format was developed by Industrial Light & Magic (ILM) for OpenEXR. OpenEXR is used by ILM on all motion pictures currently in production.

For further information on using files, please see Opening Files (on page 42), Importing Files (on page 43), and Saving Files (on page 56).

Support

- 16-bit floating-point, 32-bit floating-point, and 32-bit integer pixels.
- Extensibility to include new compression codec and image types.
- High dynamic range image (HDRI) and color precision.

> Note: When you open a high dynamic range image (on page 149) (HDRI), resolution controls are displayed in the Information bar. These allow you to modify the image.

- Multiple lossless image compression algorithms.

Interface

Compression type—Used to select the type of compression to apply when saving the file.

- **None—**Saves the file using no compression.
- **Run-length encoding—**Saves the file using a run length encoding compression. Run-length encoding (RLE) is a very simple form of data compression in which repeated data (that is, sequences in which the same data value occurs many consecutive times, or in a run) are stored as a single data value and how many times it occurs.
- **zlib single scan lines—**Saves the file using a zlib compression performed one scan line at a time.
- **zlib 16 block scan lines—**Saves the file using a zlib compression performed in blocks of 16 scan lines. This option is most effective with images that do not have film grain applied.
- **Piz-based wavelet—**Saves the file using a combined wavelet / Huffman compression. This form of compression is quite effective when dealing with grainy images, and will often surpass any of the other options under grainy conditions.

Line order—Used to select the order in which to perform the compression based on the first scan line.

- **Use lowest Y coordinate scan line**—Begins the compression using the scan line with the lowest 'Y' coordinate.
- **Use highest Y coordinate scan line—**Begins the compression using the scan line with the highest 'Y' coordinate.

Copyright © Right Hemisphere 2006. All Rights Reserved.

Portable Network Graphics (.png)

You can view Portable Network Graphics (.png) files.

The .png file format (Portable Network Graphics), developed by the PNG Internet Group, is a bitmapped (raster) image file format. This file format is primarily used in graphics and image manipulation programs and is a standard on the World Wide Web.

PNG is capable of storing up to 16-bits (gray-scale) or 48-bits (true color) per pixel, and up to 16-bits of alpha data and supports the progressive display of image data and storage of gamma, transparency and textual information, and uses a lossless form of data compression.

For further information on using files, please see Opening Files (on page 42), Importing Files (on page 43), and Saving Files (on page 56).

Support

- All sub-types.

Portable Network Graphics Export (.png)

You can save files to the Portable Network Graphics (.png) format.

The .png file format (Portable Network Graphics), developed by the PNG Internet Group, is a bitmapped (raster) image file format. This file format is primarily used in graphics and image manipulation programs and is a standard on the World Wide Web.

This format is capable of storing up to 16-bits (gray-scale) or 48-bits (true color) per pixel, and up to 16-bits of alpha data and supports the progressive display of image data and storage of gamma, transparency and textual information, and uses a lossless form of data compression.

For further information on using files, please see Opening Files (on page 42), Importing Files (on page 43), and Saving Files (on page 56).

Support

- All sub-types.

Interface

Interlaced—This option allows the image to be downloaded via internet browsers in successive waves of bit streams allowing the image to be viewed in low resolution until the missing lines arriving.

Copyright © Right Hemisphere 2006. All Rights Reserved.

Portable Pixelmap Graphic (.ppm)

You can save files to the Portable Pixelmap Graphic (.ppm) format.

The .ppm file format is a simple color graphics format and serves as the lowest common denominator for converting and exchanging graphics files between different platforms. It uses 24-bit per pixel, 8 for red, 8 for blue, and 8 for green. Unlike most graphics file formats, a PPM file is plain text and can be processed with text processing tools. It is related to the PBM (black and white) and PGM (grayscale) graphics file formats.

For further information on using files, please see Opening Files (on page 42), Importing Files (on page 43), and Saving Files (on page 56).

Publisher's Paintbrush Bitmap Graphic (.pcx)

You can view Publisher's Paintbrush Bitmap Graphic (.pcx) files.

The .pcx file format is a bitmap format developed by PC Paintbrush and is used to store bitmap (raster) graphics on PCs. PCX can store mapped and unmapped image, supports 4-bit, 8-bit, and 24-bit graphics and can contain uncompressed or RLE-compressed image data.

For further information on using files, please see Opening Files (on page 42), Importing Files (on page 43), and Saving Files (on page 56).

Copyright © Right Hemisphere 2006. All Rights Reserved.

Radiance Picture Format (.hdr)

You can view Radiance Picture Format (.hdr) files.

The .hdr file format provides a high dynamic range image (HDRI) file format for use in the Radiance Software suite. It stores color values in four bytes: three for the red, green and blue color values and one as a common exponent.

Note: When you open a high dynamic range image (on page 149) (HDRI), resolution controls are displayed in the Information bar. These allow you to modify the image.

For further information on using files, please see Opening Files (on page 42), Importing Files (on page 43), and Saving Files (on page 56).

Scalable Vector Graphics (.svg)

You can view Scalable Vector Graphics (.svg) files.

The .svg file format (Scalable Vector Graphics) is open source standard vector graphics language based on XML (Extensible Markup Language) developed by the World Wide Web Consortium (W3C). It is primarily used to design Web pages with high-resolution graphics including gradients, transparency, animation, and filter effects. The .svg format supports Bezier splines, NURBS curve conversion and embedded fonts.

Note: Bezier splines improve the modeling of natural (and some human-made) objects.

For further information on using files, please see Opening Files (on page 42), Importing Files (on page 43), and Saving Files (on page 56).

Copyright © Right Hemisphere 2006. All Rights Reserved.

Scalable Vector Graphics Export (.svg)

You can save files to the Scalable Vector Graphics (.svg) format.

The .svg file format (Scalable Vector Graphics) is open source standard vector graphics language based on XML (Extensible Markup Language) developed by the World Wide Web Consortium (W3C). It is primarily used to design Web pages with high-resolution graphics including gradients, transparency, animation, and filter effects. The .svg format supports Bezier splines, NURBS curve conversion and embedded fonts.

Note: Bezier splines improve the modeling of natural (and some human-made) objects.

For further information on using files, please see Opening Files (on page 42), Importing Files (on page 43), and Saving Files (on page 56).

Silicon Graphics Image (.rgb, .rgba, .int, .inta)

You can view Silicon Graphics Image (.rgb, .rgba, .int, .inta) files.

The .sgi file format is a generic bitmap format used for storing black-and-white, gray-scale, and color images developed at Silicon Graphics. SGI files include color .rgb (.rgb extension), color .rgb with alpha channel data (.rgba extension), and .int images.

For further information on using files, please see Opening Files (on page 42), Importing Files (on page 43), and Saving Files (on page 56).

Support

- 8-32 bpp images.
- RLE or uncompressed.

Limitations

- Color maps are not supported.

Copyright © Right Hemisphere 2006. All Rights Reserved.

Shockwave Flask Object Export (.swf)

You can save files to the Macromedia Shockwave Flash Object (.swf) format.

The .swf file format is a binary format that delivers vector graphics (especially animations) and other data types, including 'bitmapped' video and sound over the Internet to the Macromedia Flash Player. Commentators describe the technology as 'non-native' to the Web. Very simple playback (with a repeat loop) is controlled by a timeline; interactive examples (even very simple ones) use both a timeline and ActionScript, a scripting language similar to JavaScript. ActionScripts may reference objects within the .swf file or resources external to it. For example, Macromedia FLV video files.

SWF files are typically derived from a FLA file (Macromedia Flash Project File); they may also be produced in other ways using third-party software. They may be combined with a runtime version of the Flash player, resulting in a file type called projector. Windows versions of projector files are executables with an exe extension.

Note: There are no video controls displayed underneath the viewport.

For further information on using files, please see Opening Files (on page 42), Importing Files (on page 43), and Saving Files (on page 56).

SOFTIMAGE Picture (.pic)

You can view SOFTIMAGE Picture (.pic) files.

The .pic file format is a bitmap (raster) image file developed by Softimage. The format originated under MS-DOS on Intel-based machines.

For further information on using files, please see Opening Files (on page 42), Importing Files (on page 43), and Saving Files (on page 56).

Copyright © Right Hemisphere 2006. All Rights Reserved.

Tagged Image File Format (.tif, .tiff)

You can view Tagged Image (.tif, .tiff) files.

The .tif and .tiff file formats, developed by Aldus and now controlled by Adobe, are the de-facto standard formats for high color depth (32-bit) graphics. They are highly compressed 2-bit formats that can render to a very high resolution. For example, 16,000 x 16,000. They are widely used in image manipulation applications such as Photoshop, DTP, and scanning, and can be directly manipulated by PostScript. They include a number of options that can be used to indicate the simple geometry of the image, such as its size, but others define how the data is arranged and various image compression options.

For further information on using files, please see Opening Files (on page 42), Importing Files (on page 43), and Saving Files (on page 56).

Tagged Image File Format Export (.tif, .tiff)

You can save files to the Tagged Image file (.tif, .tiff) format.

The .tif and .tiff file formats, developed by Aldus and now controlled by Adobe, are the de-facto standard formats for high color depth (32-bit) graphics. They are highly compressed 2-bit formats that can render to a very high resolution. For example, 16,000 x 16,000. They are widely used in image manipulation applications such as Photoshop, DTP, and scanning, and can be directly manipulated by PostScript. They include a number of options that can be used to indicate the simple geometry of the image, such as its size, but others define how the data is arranged and various image compression options.

For further information on using files, please see Opening Files (on page 42), Importing Files (on page 43), and Saving Files (on page 56).

Copyright © Right Hemisphere 2006. All Rights Reserved.

TGA File (.tga)

You can view TGA (Truevision Advanced Raster Graphics Adapter) (.tga) files.

The .tga file format (TARGA) is one of the most widely used bitmap file formats for storage of 8 to 32-bit truecolor images and is developed by TrueVision.

See also Opening Files **(on page 42)**, Importing Files **(on page 43)**, and Saving Files (on page 56).

Support

- All sub-types.
- Alpha channel.
- Color maps.
- Developer-definable data.
- Gamma value.
- Postage stamp image.
- RLE compression.
- Textual information.

TGA File Export (.tga)

You can save files to the TGA (Truevision Advanced Raster Graphics Adapter) (.tga) format.

The .tga file format (TARGA) is one of the most widely used bitmap file formats for storage of 8 to 32-bit truecolor images and is developed by TrueVision.

For further information on using files, please see Opening Files (on page 42), Importing Files (on page 43), and Saving Files (on page 56).

Support

- All sub-types.
- Alpha channel.
- Color maps.
- Developer-definable data.
- Gamma value.
- Postage stamp image.
- RLE compression.
- Textual information.

Copyright © Right Hemisphere 2006. All Rights Reserved.

Windows Bitmap Graphic Export (.bmp, .dib)

You can save files to the Windows Bitmap Graphic (.bmp, .dib) format.

The .bmp file format is the standard graphic file format for the Windows operating system and is developed by Microsoft. Most graphics and imaging applications support the creation and display of .bmp format. The files contain either color or black-and-white bitmap (raster) data and the format was developed for storing bitmap files in a device-independent bitmap (DIB) format allowing display on any type of display device.

The Device Independent Bitmap (DIB) is the format used to store bitmaps in .bmp files. However, you are able save DIB files to memory.

These files exist in two different formats:

- OS/2 Format. BMP is the native bitmap file format of OS/2.
- Windows Format.

For further information on using files, please see Opening Files (on page 42), Importing Files (on page 43), and Saving Files (on page 56).

Support

- 1/8/16/24/32 bpp.
- RLE and uncompressed.
- Windows and OS/2.

Windows Cursor File (.cur)

You can view Windows Cursor File (.cur) files.

For further information on using files, please see Opening Files (on page 42), Importing Files (on page 43), and Saving Files (on page 56).

Copyright © Right Hemisphere 2006. All Rights Reserved.

Windows Icon File (.ico)

You can view Windows Icon File (.ico) files.

For further information on using files, please see Opening Files (on page 42), Importing Files (on page 43), and Saving Files (on page 56).

Windows Run Length Encoded Bitmap (.rle)

You can view Windows Run Length Encoded Bitmap (.rle) files.

The .rle file format (Windows RLE Bitmap) is for compressing run-length encoded (RLE) bitmaps and is developed by Microsoft. The format uses 4 bits per pixel and 8-bits per pixel and the compression reduces the disk and memory storage required for a bitmap.

For further information on using files, please see Opening Files (on page 42), Importing Files (on page 43), and Saving Files (on page 56).

Copyright © Right Hemisphere 2006. All Rights Reserved.

Appendix B: 3D File Formats

The following 3D file formats are supported by Deep Exploration CAD and Standard Editions and Deep Server. This list is organized alphabetically by file format.

File Format	Type	Extension	View/ Import	Export	Version/Notes
Autodesk 3D Studio	Scene	3DS	Yes (on page 427)	Yes (on page 426)	
Autodesk 3D Studio ASCII	Scene	ASC	Yes (on page 424)	Yes (on page 425)	
Autodesk 3D Studio Max ASCII	Scene	ASE	Yes (on page 428)		
Autodesk 3D Studio Project	Scene	PRJ	Yes (on page 429)		
AOFF File Format	Scene	GEO	Yes (on page 422)	Yes (on page 423)	
Caligari trueSpace Object	Scene	COB	Yes (on page 431)	Yes (on page 430)	
Caligari trueSpace Scene	Scene	SCN	Yes (on page 432)		
CINEMA 4D	Scene	C4D	Yes (on page 433)		Version 5.0.
DirectX Model	Scene	X	Yes (on page 435)	Yes (on page 434)	
HTML Document with 3D	Scene	HTML		Yes (on page 436)	Must be viewed with either Deep Publish or Deep View (on page 156).
Imagine Geometry	Scene	IOB	Yes (on page 437)		
ISO G Code Files	Scene	ISO, NC	Yes (on page 438)		
LightWave 3D and Binary Object	Scene	LWO, LW	Yes (on page 440)*	Yes (on page 439)**	*Import: LightWave 5.6, 6.0, 7.0, 7.5. **Export: LightWave 5.6 + .uv files and LightWave 6.0 objects only.
LightWave Scene	Scene	LWS	Yes (on page 442)	Yes (on page 441)	
Max File	Scene	MAX	Yes (on page 444)	Yes (on page 443)	Versions 4.0 - 8. Requires 3ds max and the DCOM plugin to be installed (on page 350).
Maya ASCII Scene	Scene	MA	Yes (on page 447)	Yes (on page 446)	Versions 3.0, 4.0, 4.5, 5.0, 6.0, 7.0. Requires Maya to be installed.
Maya Binary Scene	Scene	MB	Yes (on page 449)	Yes (on page 448)	Versions 3.0, 4.0, 4.5, 5.0, 6.0, 7.0. Requires Maya to be installed.
Nendo	Scene	NDO	Yes (on page 450)		Versions 1.0 and 1.1.
Object File Format Vector Graphics	Scene	OFF	Yes (on page 452)	Yes (on page 453)	

Open Inventor File	Scene	IV	Yes (on page 455)	Yes (on page 454)	
OpenFlight Scene Description Database	Scene	FLT	Yes (on page 456)*	Yes (on page 457)	Version 13.0. *Import: Multigen API DLLs not required.
OpenGL CPP Code	Scene	CPP		Yes (on page 458)	
Points File	Scene	PTS	Yes (on page 460)		
Polygon Model Format	Scene	PLY	Yes (on page 461)		
Portable Graymap Graphics File	Scene	PGM	Yes (on page 462)		16-bit
POV-Ray RAW Triangle Format	Scene	RAW	Yes (on page 463)	Yes (on page 464)	
Power Render Object	Scene	PRO	Yes (on page 465)		Version 2.5.
Protein Data Bank	Scene	PDB	Yes (on page 466)		Version 2.5.
Quake Character Model I	Scene	MDL	Yes (on page 469)		Version 6.
Quake Character Model II	Scene	MD2	Yes (on page 470)*		
Quake Character Model III	Scene	MD3	Yes (on page 471)*		
Quake Map	Scene	MAP	Yes (on page 472)		
Quicktime 3D Metafile	Scene	3DM, 3DMF	Yes (on page 473)		
RAX Extended RAW Triangles	Scene	RAX	Yes (on page 474)		
Rhinoceros 3D Model	Scene	3DM	Yes (on page 476)	Yes (on page 475)	Versions 1.0, 2.0, 3.0.
Right Hemisphere Binary	Scene	RH	Yes (on page 477)	Yes (on page 478)*	Export: Version 3.5 and 4.0.
Shockwave 3D File	Scene	W3D		Yes (on page 480)	
Shockwave Web Page	Scene	HTML		Yes (on page 481)	Requires Shockwave Player to be installed (on page 156).
SOFTIMAGE|XSI	Scene	XSI	Yes (on page 484)*	Yes (on page 482)**	*Import: Versions 1.0, 3.0, 3.5. **Export: Versions 3.0 and 3.5.
Universal 3D	Scene	U3D	Yes (on page 486)	Yes (on page 485)	
Unreal Character	Scene	PSK	Yes (on page 487)		
VRML Worlds	Scene	WRL, VRML	Yes (on page 489)*	Yes (on page 488)**	*Import: Versions 1.0 and 2.0 ASCII only. **Export: Version 2.0.
Wavefront Object	Scene	OBJ	Yes (on	Yes (on page	

Copyright © Right Hemisphere 2006. All Rights Reserved.

AOFF File Format (.geo)

You can view AOFF (.geo) files.

The .geo file format is similar to .off files except there is no header in .off files and the points are numbered with 1, instead of 0.

For further information on using files, please see Opening Files (on page 42), Importing Files (on page 43), and Saving Files (on page 56).

AOFF File Format Export (.geo)

You can save files to the AOFF file (.geo) format.

The .geo file format is similar to .off files except there is no header in .off files and the points are numbered with 1, instead of 0.

For further information on using files, please see Opening Files (on page 42), Importing Files (on page 43), and Saving Files (on page 56).

Copyright © Right Hemisphere 2006. All Rights Reserved.

Autodesk 3D Studio ASCII (.asc)

You can view Autodesk 3D Studio ASCII (.asc) files.

The .asc file format is an easily readable, easily parsable ASCII-format - created by Discreet for the 3ds max application.

For further information on using files, please see Opening Files (on page 42), Importing Files (on page 43), and Saving Files (on page 56).

Add the directory path on your hard disk where the 3ds or 3ds max texture map images are stored. Specify the directory path with Tools > Options > Textures. Add the new directory path using the Add button.

Support

- Animation.
- Cameras.
- Diffuse, specular, ambient color.
- Information on objects, materials, cameras and light sources is supported. All other information is ignored.
- Light sources.
- Materials.
- Smooth groups are read, but are not used.
- Texture Map names.
- The current application smooth angle is used.
- Three-dimensional objects (mesh) are read: name, top, side, local matrix, texture coordinates, and materials are used.

Autodesk 3D Studio ASCII Export (.asc)

You can save files to the Autodesk 3D Studio ASCII (.asc) format.

The .asc file format is an easily readable, easily parsable ASCII-format - created by Discreet for the 3ds max application.

For further information on using files, please see Opening Files (on page 42), Importing Files (on page 43), and Saving Files (on page 56).

Copyright © Right Hemisphere 2006. All Rights Reserved.

Autodesk 3D Studio Export (.3ds)

You can save files to the Autodesk 3D Studio (.3ds) format.

The .3ds file format is the native format for Autodesk's 3ds max application. 3ds max is a 3D modeling, animation, and rendering solution used to create 3D animation for game development, design visualization, feature film and television effects, and education. Additionally, it is the industry standard for transferring models between 3D programs, or for storing models for 3D resource catalogs.

For further information on using files, please see Opening Files (on page 42), Importing Files (on page 43), and Saving Files (on page 56).

Texture Paths

3DS files have a very limited capability to store texture paths (only 8 characters). Therefore, if you have a 3D object in another format with long texture pathnames, converting it to .3ds makes the textures disappear. To resolve this, you should move all textures to the directory that contains the model.

For example a Maya file that is in C:\Documents and Settings\[user name]\My Documents\maya\projects\default\scenes would have its textures in C:\Documents and Settings\[user name]\My Documents\maya\projects\default\images. If this Maya file was converted to a .3ds file the texture paths would be lost as they are too long.

Support

- Animation.
- Converts all textures to 2D bitmap formats.
- If an object has more than 65535 polygons, vertices, and texture coordinates, it is split into sub-objects.
- Only 8 character texture paths supported.
- Scenes are saved as smoothed triangle meshes.
- Texture coordinates are saved along with the triangular meshes if texture data exists.

Interface

Texture coordinates—Saves the texture coordinates (u,v) that are assigned to the polygon's vertices.

Remove UV scale, offset from materials—Removes the 'Offset U and V' parameters and sets the 'Scale U and V' parameters to 1.

Export hierarchy information—Saves the object's hierarchical relationships in the file.

Export smooth groups data—Creates and saves smoothing groups in the file. That is, the objects do not appear faceted when rendered.

Export local matrix—Saves the object's transformation and identity matrices.

Export lights—Saves the light objects in the file.

Export cameras—Saves the camera objects in the file.

Export default camera—Saves the default camera in the file.

Autodesk 3D Studio Import (.3ds)

You can import and view Autodesk 3D Studio (.3ds) files.

The .3ds file format is the native format for Autodesk's 3ds max application. 3ds max is a 3D modeling, animation, and rendering solution used to create 3D animation for game development, design visualization, feature film and television effects, and education. Additionally, it is the industry standard for transferring models between 3D programs, or for storing models for 3D resource catalogs.

For further information on using files, please see Opening Files (on page 42), Importing Files (on page 43), and Saving Files (on page 56).

X-Axis Transformation

3DS files may have had an X-axis mirror transform applied to objects in 3ds max. This is called 'bad parity'; a term used by the company that created the .3ds file format - Discreet. Failure to detect this transformation means that objects may appear in the wrong position within a scene.

The Import Properties dialog includes an option to fix objects with bad parity (mirror transforms); this is selected by default for all .3ds files.

Support

- 3D objects (mesh): name, top, side, local matrix, texture coordinates, and any materials that are used.
- Animation.
- All other information is excluded from import.
- Cameras.
- Light sources.
- Materials: name, diffuse color, specular color, ambient color, texture map names.
- Only 8 character texture paths supported.

Interface

Import keyframe data—Imports keyframe animation data.

Import animation—Imports the animation.

Repair mirror transformed objects—Repairs object data that have 'bad parity'. That is, files that have had an X-axis mirror transform applied to objects in 3ds max. We recommend leaving this option selected, and only disable it if your scene contains animated objects which appear incorrectly positioned when any bad parity is corrected.

Copyright © Right Hemisphere 2006. All Rights Reserved.

Autodesk 3D Studio Max ASCII (.ase)

You can view Autodesk 3D Studio Max ASCII (.ase) files.

The .ase file format is an easily readable, easily parsable ASCII-format - created by Discreet for the 3ds max application.

For further information on using files, please see Opening Files (on page 42), Importing Files (on page 43), and Saving Files (on page 56).

Support

- Animation.
- GEOMOBJECT objects are loaded as a mesh object. If a material is not defined then the material 'wire color' is created and assigned to the object.
- SHAPEOBJECT objects: All lines are converted to polylines and the default application material is used.

Limitations

- Decomposed matrices are not read (.ase vertices are already in world coordinates).
- Mesh smoothing is ignored.

Autodesk 3D Studio Project Import (.prj)

You can import and view Autodesk 3D Studio Project (.prj) files.

The .prj file format is used by Autodesk's 3ds max application for Project data.

For further information on using files, please see Opening Files (on page 42), Importing Files (on page 43), and Saving Files (on page 56).

Interface

Import key frame data—Imports keyframe animation data.

Import animation—Imports the animation.

Repair mirror transformed objects—Repairs object data that have 'bad parity'. That is, files that have had an X-axis mirror transform applied to objects in 3ds max. We recommend leaving this option selected, and only disable it if your scene contains animated objects which appear incorrectly positioned when any bad parity is corrected.

Copyright © Right Hemisphere 2006. All Rights Reserved.

Caligari trueSpace Object Export (.cob)

You can save files to the Caligari trueSpace Object (.cob) format.

The .cob file format is a 3D object format generated by trueSpace, a 3D design package from Caligari Corporation. trueSpace has become the 3D design program of choice for artists who are creating complex new objects and avatars for use in Active Worlds.

Both ASCII and binary formats encode the same information and have the same general layout. ASCII files are edited in a text editor while binary files are smaller and faster for programs to load and save.

For further information on using files, please see Opening Files (on page 42), Importing Files (on page 43), and Saving Files (on page 56).

Support

- All geometry and material attributes.
- Binary and ASCII with animation support.
- Textures are exported to the selected file type.
- trueSpace versions 3.0 and 4.0.

Interface

ASCII mode—Saves an ASCII .cob file. Otherwise, a binary .cob file is saved. Note that the binary file is significantly smaller than the ASCII file.

Rescale—Used to establish whether to rescale the model.

- **Rescale**—Rescales the model to the value entered in the 'Percent of workplace' field.
- **Percent of workplace**—Determines the percentage of the trueSpace workplace to which to rescale the model. We recommend using the 'Fit to' option in the Geometry Transform tab to rescale the model and not this modifying this option.

Move objects axis to object center—Moves the object's axis to the center of each object.

Caligari trueSpace Object Import (.cob)

You can import and view Caligari trueSpace Object (.cob) files (both ASCII and binary).

The .cob file format is a 3D object format generated by trueSpace, a 3D design package from Caligari Corporation. trueSpace has become the 3D design program of choice for artists who are creating complex new objects and avatars for use in Active Worlds.

Both ASCII and binary formats encode the same information and have the same general layout. ASCII files are edited in a text editor while binary files are smaller and faster for programs to load and save.

For further information on using files, please see Opening Files (on page 42), Importing Files (on page 43), and Saving Files (on page 56).

Support

- Binary and ASCII with animation support.
- The following chunks are read: POLH, GROU, MAT1, Mbal, Nurb, NMes, Lght, Came, Chan, Hidn, Vews, ROpt.

Interface

Join equal materials—Only unique materials are created and any redundant materials are removed. All objects pointing to any removed materials are re-pointed to a new, unique material definition. This is useful when importing Caligari files since trueSpace assigns a different material definition to each and every object, even if the materials use the same parameters. Note that this option removes the redundant materials.

Import animation—Imports the animation sequence from the trueSpace file.

Copyright © Right Hemisphere 2006. All Rights Reserved.

Caligari trueSpace Scene Import (.scn)

You can import and view Caligari trueSpace Scene (.scn) files.

The .scn file format was developed by Caligari trueSpace. Both ASCII and binary formats encode the same information and have the same general layout. ASCII files are edited in a text editor while binary files are smaller and faster for programs to load and save.

For further information on using files, please see Opening Files (on page 42), Importing Files (on page 43), and Saving Files (on page 56).

Support

- Binary and ASCII with animation support.
- Chunks: POLH, GROU, MAT1, Mbal, Nurb, NMes, Lght, Came, Chan, Hidn, Vews, ROpt.

Interface

Join equal materials—Only unique materials are created and any redundant materials are removed. All objects pointing to any removed materials are re-pointed to a new, unique material definition. This is useful when importing Caligari files since trueSpace assigns a different material definition to each and every object, even if the materials use the same parameters. Note that this option removes the redundant materials.

Import animation—Imports the animation sequence from the trueSpace file.

CINEMA 4D (.c4d)

You can view CINEMA 4D (.c4d) files.

The .c4d file format is the native file format for the CINEMA 4D application developed by MAXON.

The original scene hierarchy is completely recreated, including all groupings and their related transformations.

For further information on using files, please see Opening Files (on page 42), Importing Files (on page 43), and Saving Files (on page 56).

Support

- Both (u,v) texture coordinates are read correctly. In later versions, this conversion is enhanced.
- You can only view the mesh geometry and materials.

Copyright © Right Hemisphere 2006. All Rights Reserved.

DirectX Model Export (.x)

You can save files to the DirectX Model file (.x) format.

- The DirectX file format provides a rich, template-driven format that enables the storage of meshes, textures, animations, and user-definable objects.
- Hierarchies are used to express relationships between data records.
- The DirectX file format is used natively by the Microsoft Direct3D Retained Mode API, providing support for reading pre-defined objects into the application or for writing mesh information constructed by the application in real time.
- The DirectX file format provides low-level data primitives upon which applications define higher-level primitives through templates. This is the method by which Direct3D Retained Mode defines higher-level primitives such as vectors, meshes, matrices, and colors.

For further information on using files, please see Opening Files (on page 42), Importing Files (on page 43), and Saving Files (on page 56).

Support

- Binary and ASCII with animation support.

Interface

General—Used to establish general settings.

- **ASCII mode**—Saves the model in ASCII mode. Otherwise, the model is saved in binary mode.
- **Export materials**—Saves the mesh object's material attributes in the file. These are exported using the DirectX MeshMaterialList structure.
- **Export templates**—Saves templates in the file. A template is used to establish how the file's data stream is interpreted by the next application to view the file.
- **Add top level frame**—Adds a single frame if more than one frame is without a parent object.
- **Flip coordinate system**—Rotates the model so it uses a left-hand coordinate system. That is, it flips the Y and Z axes.
- **Export skins**—Saves the model's skins in the file.
- **Export empty bones**—Saves the empty bones in the file.
- **Export bones without meshes**—Exports the bone objects excluding the bone's meshes.
- **Export empty nodes**—Saves the empty node in the file.
- **Maximum object name**—Specifies the maximum number of characters in the objects' names.

Geometry—Used to establish geometry settings.

- **Export normals**—Saves face vertex normals in the file. They are exported using the DirectX MeshNormals structure.
- **Invert normals**—Inverts the direction of each vertex normal so that each normal points in the opposite direction.
- **Texture coordinates**—Exports face vertex (u,v) texture coordinates. These are exported using the DirectX MeshTextureCoords structure.
- **Maximum vertices in polygon**—Determines the maximum number of vertices in each polygon in the file.

DirectX Model Import (.x)

You can import and view Direct X Model (.x) files.

- The DirectX file format provides a rich, template-driven format that enables the storage of meshes, textures, animations, and user-definable objects.
- Hierarchies are used to express relationships between data records.
- The DirectX file format is used natively by the Microsoft Direct3D Retained Mode API, providing support for reading pre-defined objects into Deep Exploration, or for writing mesh information constructed by the application in real time.
- The DirectX file format provides low-level data primitives upon which applications define higher-level primitives through templates. This is the method by which Direct3D Retained Mode defines higher-level primitives such as vectors, meshes, matrices, and colors.

For further information on using files, please see Opening Files (on page 42), Importing Files (on page 43), and Saving Files (on page 56).

Support

- Binary and ASCII with animation support.
- Instancing and hierarchies are also supported. Instancing enables multiple references to an object, such as a mesh, while storing its data only once per file.
- Support for animation sets enables you to store pre-defined paths for playback in real time.
- The DirectX file format supports importing of all templates defined in version 1 of the format.

Limitations

- Compressed files
- Progressive meshes.

Interface

Import animation data—Imports all animation data from the DirectX file.

Use DirectX camera position—Uses the DirectX camera position instead of the default camera position.

Join equal materials—Joins all materials that are identical. For example, if a file contains two identical materials (or mapped images), when this option is checked, then only one material is imported.

Optimize vertices—Reduces the number of vertices in the model by merging all vertices that have equal X, Y, Z coordinates.

Optimize texture points—Reduces the number of texture points in the model by ignoring duplicated texture points.

Flip coordinate system—Rotates the model so it uses a right-hand coordinate system. That is, it flips the Y and Z axes.

Import skins—Imports the object's skins.

Optimize hierarchy—Reduces the number of coordinates in the array of per vertex normals.

Copyright © Right Hemisphere 2006. All Rights Reserved.

HTML Document with 3D (.html)

You can save files to the HTML Document with 3D (.html) format.

For further information on using files, please see Opening Files (on page 42), Importing Files (on page 43), and Saving Files (on page 56).

Interface

RH Parameters—Used to establish how .rh files are exported.

- **Compress file**—Reduces the model's file size. The image quality is retained.
- **Export animation**—Saves the animation in the .rh file.
- **Export skins**—Saves the model's skins in the .rh file.

HTML—Used to establish how the scene is displayed in the .html file.

- **Template**—Used to select the style of the template to apply to the Web page.
- **License URL**—The location of the site publisher site license key (.rhl file). This is required when publishing 3D content on a Web site. The key contains the name of publisher (a company or personal name), the URL of the site, an identifier (special information to prove the license is valid), and the limitation date (defines the expiration period of the license). If this field is not specified or the .rhl file is not found, the root folder of the Web site is searched. If the license is not found, has expired, or is incorrect, a watermark is displayed in the right, lower corner of the 3D scene Web page.

Note: The URL must contain the full scene directory address. For example, if a 3D scene is published to http://machine.domain.com:81/scenes/20021022/, this field should contain http://machine.domain.com:81/. This allows access to all scenes by port 81 of machine.domain.com. When the scene is downloaded, this URL is compared with the real URL of the HTML page; they must be identical.

- **Alignment**—Used to determine the position of the model in the Web page.
- **Width**—Determines the width of the frame that contains the model.
- **Height**—Determines the height of the frame that contains the model.

Special Text—Used to add additional text to display in the .html file.

- **Author**—The name to display in the Web page.
- **Title**—The title to display in the Web page.
- **Description**—The description to display in the Web page.

Open scene in browser after export—Opens the HTML scene in the default browser window once the export is complete.

Imagine Geometry (.iob)

You can view Imagine Geometry (.iob) files.

The .iob file format, developed by Impulse Inc, is used in the Imagine application which creates models of objects or character in 3D and allows rendering into 2D pictures, 3D anaglyph and animation sequences.

Note that most polygons in Imagine file scenes have inconsistent orientation. That is, some polygons are oriented clockwise while others are oriented counter-clockwise. To correct this, you can convert all normals to double-sided (on page 219) so that each triangle is created twice - in both clockwise and counter-clockwise orientations.

Note: Imagine files typically have file extensions of .iob, .obj, or no extension at all. This plugin expects that the file extension has been renamed to .iob.

For further information on using files, please see Opening Files (on page 42), Importing Files (on page 43), and Saving Files (on page 56).

Support

- Imports Imagine or TTDDD binary geometry files.
- Only mesh geometry's surface attributes are properly extracted from the file.

Copyright © Right Hemisphere 2006. All Rights Reserved.

ISO G Code Format (.iso, .nc)

You can view ISO G Code Format (.iso, .nc) files.

The .iso file format contains the complete contents of a CD disc or other disk. ISO images are often created to backup a CD or distribute CD's over the Internet or other network. The .nc format are numeric code files.

These formats are based on the ISO 9660 CD-ROM file system standard.

ISO is short for International Organization for Standardization (http://www.iso.org); founded in 1947 the ISO is a worldwide federation of national standards bodies from some 140 countries. The first ISO standard was published in 1951 with the title, 'Standard reference temperature for industrial length measurement'.

The first standard used for data CDs on PC or IBM compatible computers. Unfortunately, in the beginning many manufactures had their own implementation of this loose standard. The ISO 9660 standard is constantly being upgraded and tightened to include new methods. The most important factor of this standard is when having both audio and data on one CD that the data is placed before the audio. This was originally referred to as High Sierra.

For further information on using files, please see Opening Files (on page 42), Importing Files (on page 43), and Saving Files (on page 56).

LightWave 3D Binary and Object Export (.lwo, .lw)

You can save files to the LightWave 3D Binary and Object (.lwo, .lw) formats:

- LightWave 3D Object file format (object file format of LightWave 5.6). Texture coordinates are saved to .uv files.
- LightWave 3D Object file format 2 (object file format of LightWave 6.0). Each object is stored as a separate layer.

For further information on using files, please see Opening Files (on page 42), Importing Files (on page 43), and Saving Files (on page 56).

Support

- Animation including field of view, object transparency, and light colors.

Limitations

- Files with more than 65535 points end faces cannot be saved as version 5.6 of this format.

Interface

Common—Used to establish the common settings.

- **Version**—Saves the file as the selected LightWave version.
- **Export SubDs**—Used to establish subdivision control mesh object settings.
  - **Final mesh**—Creates a highly detailed and a high polygon count mesh.
  - **Control mesh**—Creates a low detailed, low polygon count mesh. This mesh is subdividable.
  - **Control mesh using PTCH chunk**—Creates a low detail, low polygon count mesh. The mesh is structured with the Subdivision patches (PTCH) chunk.
- **LightWave 5.6**—Saves the model as a LightWave version 5.6 file.

  Note: If the file has more than 65535 points end faces, it is automatically saved as version 6.0 of the format regardless of your selection.

  - **Create .uv files**—Creates and saves .uv files.
  - **Export UVs using chunks**—Saves all (u,v) texture coordinates that are assigned to polygon vertices. The UV coordinates are saved according to the UVIM and UVCV chunks.
- **LightWave 6.0**—Saves the model as a LightWave version 6.0 file.
  - **Export UVs**—Saves any (u,v) texture coordinates that are assigned to polygon vertices.
  - **Use discontinuous UVs**—Uses discontinuous (u,v) texture coordinates. That is, additional points are not created for points that have the same UV values.

    Note: We recommend using this for LightWave versions 6.5 and higher.

  - **Export extra maps**—Saves diffuse, bump, specular, and emissions maps.

Copyright © Right Hemisphere 2006. All Rights Reserved.

LightWave 3D Binary and Object Import (.lwo, lw)

You can import and view LightWave 3D Binary and Object (.lwo, .lw) files.

The .lwo and .lw file formats are native formats for the LightWave 3D application developed by Newtek. The .lw file format is the binary from the LightWave 3D application. They are stored on disk as 3D meshes consisting of points, polygons (these can include faces, curves or patches) and surfaces. Files can contain a single connected mesh or several disjointed meshes describing a single logical object. An object file may also contain one or more surface definitions with no mesh.

Deep Exploration uses the following order to search object files:

1. Folder of .scn file.
2. Content folders.
3. Several last folders, specified when failed to find file occurs.
4. Prompt from user.

Note: When you import a .lw or .lwo file, you must add the locations of the associated images (on page 235) used in the file.

For further information on using files, please see Opening Files (on page 42), Importing Files (on page 43), and Saving Files (on page 56).

Support

- All possible surface information, including smoothing, glossiness and color, are converted.
- Layers are read as separate objects.
- Surface details and one-point polygons are not converted.
- The following types of LightWave 3D objects:
  - LightWave object file.
  - LightWave layered object file.
  - LightWave 6.0 object file.
- Two-point polygons are converted to lines.
- UView files.

Interface

Create sub-objects by material names—Converts each LightWave object into a separate sub-object. This conversion is based on the surface (material) names assigned to the object's polygons.

Create texture coordinates—Converts LightWave texture projection methods (including planar, spherical, cylindrical and cubical) into UV texture coordinates. The LightWave texture projection methods are used to map textures onto objects. The type of mapping used should match the shape of the object. For example, cube mapping is used on box-shaped objects.

Check wrapping—Attempts to remove the Wrap bug in spherical and cylindrical projection methods.

Import .uv files—Imports objects from UView files. These are UV texture coordinate files that are created by UView/Lightwave.

Import SubDs—Imports and displays the subdivision control mesh objects on a simple mesh. Otherwise, only the simple mesh is displayed.

LightWave Scene Export (.lws)

You can save files to the LightWave Scene file (.lws) format.

For further information on using files, please see Opening Files (on page 42), Importing Files (on page 43), and Saving Files (on page 56).

Support

- Animation including field of view, object transparency and light colors.

Interface

Version—Saves the file as the selected LightWave version.

- **LightWave 5.6**—Saves the model as a LightWave version 6.0 file.
- **LightWave 6.0**—Saves the model as a LightWave version 6.0 file.

Export skins—Saves the skin information in the file. This option is only valid for LightWave versions 6.5 and higher.

Export one object instance—Exports one copy of each object in the scene. For example, when a model contains four identical objects, only one object is exported and used four times.

Export viewport—Saves the current view in the file.

Copy objects to folder—Copies the objects to the specified folder.

Use prefix—Determines a URL prefix for bitmaps assigned to objects in the scene.

Copyright © Right Hemisphere 2006. All Rights Reserved.

LightWave Scene Import (.lws)

You can import and view LightWave Scene (.lws) files. Deep Exploration can read the following types of .lwo objects:

- LightWave object file.
- LightWave layered object file.
- LightWave 6.0 object file.

LightWave scene files are much like to CAD assembly files; CAD assembly files reference associated part files to create the scene. Similarly, .lws files reference .lwo and .lw files to create the scene, and these associated .lwo and .lw files reference various image files. Therefore, when you import a .lws file, you must add the locations of the folders through which Deep Exploration searches for the associated .lwo and .lw files (content folders). You must also add the locations of the images (on page 235) used in the associated files.

For further information on using files, please see Opening Files (on page 42), Importing Files (on page 43), and Saving Files (on page 56).

Supported

- Animation, camera animation, and several envelopes.
- All cameras and most light types.
- LightWave 5.6 and 6.0 scene files.
- The object hierarchy, within the original LightWave file is recreated exactly within this application.

Interface

Optimize materials—Reduces the number of materials that are imported by ignoring any duplicated materials.

Content folders—The locations of the folders through which Deep Exploration searches for the associated .lwo and .lw files.

Max File Export (.max)

You can save files to the Max (.max) format.

The .max file format was developed by Autodesk for the 3ds max application. 3ds max is a 3D modeling, animation, and rendering solution used to create 3D animation for game development, design visualization, feature film and television effects, and education.

For further information on using files, please see Opening Files (on page 42), Importing Files (on page 43), and Saving Files (on page 56).

Support

- Associated material .mli files (on page 519).

Interface

Export skins—Saves the skin information to the .max file. This option is only valid if there is skin information.

Convert polygons to triangles—Converts all polygons, if polygon faces has three or more sides, to triangles.

Hide dummies—Displays or hides the dummy objects.

Export master scale settings—Exports the measurement units to the .max file.

Export normals—Exports all surface normals. Using this option creates larger files.

Note: This option is available for 3ds max 6 and higher.

SubDs—Used to establish subdivision control mesh object settings.

- **Export final mesh**—Creates a highly detailed and a high polygon count mesh.
- **Export control mesh**—Creates a low detailed, low polygon count mesh. This mesh is subdividable.

Copyright © Right Hemisphere 2006. All Rights Reserved.

Max File Import (.max)

You can import and view Max (.max) files.

The .max file format was developed by Autodesk for the 3ds max application. 3ds max is a 3D modeling, animation, and rendering solution used to create 3D animation for game development, design visualization, feature film and television effects, and education.

For further information on using files, please see Opening Files (on page 42), Importing Files (on page 43), and Saving Files (on page 56).

Units

3ds max utilizes 'master units' when exporting .max files; 3ds max automatically re-scales .max files if they were created using a differing unit of measurement than the current master unit measurement. For example, if a file is measured in centimetres, and the current master unit measurement is inches, the file is rescaled into inches.

The unit measurement cannot be determined or changed before or after importing. Therefore, when importing files of this nature, a Units Mismatch dialog is displayed.

The 3ds max current master unit measurement is used as the units of measurement in Right Hemisphere applications for each imported file. For example, if you have two models with the first being a 1cm x 1cm x 1cm cube called 'cube_cm.max', and the second being a 1" x 1" x 1" cube called 'cube_inches.max', the following is true.

1. If the master unit measurement was inches when the models were exported, the Right Hemisphere application's units of measurement is inches:
   - When you import cube_cm.max into the Right Hemisphere application, the cube size will be 0.393701 x 0.393701 x 0.393701. (2.54*0.393701= 1).
   - When you import cube_inches.max into the Right Hemisphere application, the cube size will be 1 x 1 x 1.
2. If the master unit measurement was centimetres when the models were exported, the Right Hemisphere application's units of measurement is centimetres:
   - When you import cube_cm.max, the cube size will be 1 x 1 x 1.
   - When you import cube_inches.max, the cube size will be 2.54 x 2.54 x 2.54.

Support

- Associated materials are imported as .mli files (on page 519).

Interface

Import morph information—Imports only 'Morpher' modifier information. This option is not available if you select the 'Sample vertex animation' option.

Import skins—Imports all skin, weights, and bones information including any Character Studio information.

Note: This option is also only available with 3ds max versions 3.x and 4.x. If you are using version 5. and 6.0, please use the 'Sample vertex animation' option to import all modifier information.

Sample vertex animation—Imports all animation modifier information, including morph information, by sampling the mesh vertices at the specified frame rate. This is helpful for meshes that are deformed with animated modifiers For example, Bend and Twist.

Note: This option reduces the file import speed performance.

- **Sample animation every [number] frames**—Determines the rate at which the vertex and/or matrix animation is sampled. That is, this rate is also used when the 'Sample matrix animation' option is selected.

Note: If the 'Sample vertex animation' and 'Sample matrix animation' options are both selected, the vertices and matrix are sampled simultaneously according to the frame rate you enter.

Convert patches to mesh—Changes patch objects to a polygon mesh.

Convert NURBS to mesh—Changes NURBS surfaces to a polygon mesh.

Animation—Used to determine how the animation is extracted.

- **Sample matrix animation**—Imports all animation modifier information, including morph information, by sampling the objects' matrix at the frame rate specified in the 'Sample animation every frame' option.

  Note: Use this option if the Auto-detect option produces unsatisfactory results.

- **Auto-detect (sampling/tracks)**—Automatically detects whether to import the file by sampling the animation or by parsing the animation tracks. This option usually gives the best results.
- **Use tracks**—Imports all animation information by parsing the TCB and LINEAR animation tracks.

  Note: Any track that is not TCB or LINEAR is not parsed and the object contains no animation. We recommend using the 'Sample matrix animation' or Auto-detect options to import animation information.

Use separate instance of 3ds max—Opens a separate instance of the 3ds max application in which to view the imported file. As 3ds max must be running to read and write .max files, using this option ensures all unsaved work in the original instance of 3ds max is not lost.

Note: If you are running 3ds max and you import a .max file without using this option, all unsaved work in 3ds max is lost.

Installation Options—Opens the 3D Studio MAX DCOM Plugin Installation dialog install the 3ds max plugin.

Copyright © Right Hemisphere 2006. All Rights Reserved.

Maya ASCII Scene Export (.ma)

You can save files to the Maya ASCII Scene (.ma) file format.

Note: You must have the Maya application installed for this functionality to be enabled.

For further information on using files, please see Opening Files (on page 42), Importing Files (on page 43), and Saving Files (on page 56).

Interface

Export skin—Exports the model's skins.

Swap Y and Z axes—Switches the Y axis with the Z axis.

Material type—Used to establish the type of material shading with which to save the model.

- **Phong**—Exports the model's materials using Phong material shading.
- **Blinn**—Exports the model's materials using Blinn material shading.

Maya ASCII Scene Import (.ma)

You can import and view Maya ASCII Scene (.ma). Note that you must have the Maya application installed to enable this functionality.

Note: You must have the Maya application installed for this functionality to be enabled.

For further information on using files, please see Opening Files (on page 42), Importing Files (on page 43), and Saving Files (on page 56).

Support

- Keyframe animation. That is, moving, rotating, scaling, and morphing. For example, a morph 'BlendShape' deformer.
- NURBS and SubDs.

Limitations

- Deformations.

Interface

Select Maya Installation—Used to select the version of Maya with which to import the file. This is active when more than one version of Maya is installed.

Import lights—Imports all lights.

Import perspective camera—Imports the perspective cameras.

Swap Y and Z axes—Switches the Y axis with the Z axis.

Import animation—Imports all animation.

- **Sample animation every [number] frames**—Determines the rate at which the animation is sampled when importing the file.

Tessellate NURBS—Establishes the arrangement and density of the NURBS.

Copyright © Right Hemisphere 2006. All Rights Reserved.

Maya Binary Scene Export (.mb)

You can save files to the Maya Binary Scene (.mb) file format.

Note: You must have the Maya application installed for this functionality to be enabled.

For further information on using files, please see Opening Files (on page 42), Importing Files (on page 43), and Saving Files (on page 56).

Interface

Export skin—Exports the model's skins.

Swap Y and Z axes—Switches the Y axis with the Z axis.

Material type—Used to establish the type of material shading with which to save the model.

- **Phong**—Exports the model's materials using Phong material shading.
- **Blinn**—Exports the model's materials using Blinn material shading.

Maya Binary Scene Import (.mb)

You can import and view Maya Binary Scene (.mb) files. Note that you must have the Maya application installed to enable this functionality.

Note: You must have the Maya application installed for this functionality to be enabled.

For further information on using files, please see Opening Files (on page 42), Importing Files (on page 43), and Saving Files (on page 56).

Support

- Keyframe animation. That is, moving, rotating, scaling, and morphing. For example, a morph 'BlendShape' deformer.
- NURBS and SubDs.

Limitations

- Deformations.

Interface

Select Maya installation—Used to select the version of Maya with which to import the file. This is active when more than one version of Maya is installed.

Import lights—Imports all lights.

Import perspective camera—Imports the perspective cameras.

Swap Y and Z axes—Switches the Y axis with the Z axis.

Import animation—Imports all animation.

- **Sample animation every [number] frames**—Determines the rate at which the animation is sampled when importing the file.

Tesselate NURBS—Establishes the arrangement and density of the NURBS.

Copyright © Right Hemisphere 2006. All Rights Reserved.

Nendo Files (.ndo)

You can view Nendo (.ndo) files.

The .ndo file format is the format for the 3D low-polygon modeler file associated with Nendo.

For further information on using files, please see Opening Files (on page 42), Importing Files (on page 43), and Saving Files (on page 56).

NGRAIN Import (.ngn, .ngw)

You can import and view NGRAIN (.ngn, ngw) files.

The .ngn and .ngw file formats are used in the NGRAIN Transformer, Producer, and Mobilizer applications developed by NGRAIN Corporation.

You can also attach and detach the model's parts by right-clicking over the part and clicking Attach to Part [number] or Detach from Part [number].The detached part remains located in the position that it was detached. Once re-attached, it returns to its position on the model.

Note that you display information about the NGRAIN suite of products by right-clicking on the model and clicking About NGRAIN.

For further information on using files, please see Opening Files (on page 42), Importing Files (on page 43), and Saving Files (on page 56).

Interface

NGRAIN Transformer Path—Used to establish the file path to NGRAIN's Transformer.

- **Browse**—Opens the Open dialog and is used to select the Transformer executable file.

NGRAIN Knowledge Module Path—Used to establish the file path to NGRAIN's Knowledge Module. Note that the NGRAIN Knowledge Module is now called NGRAIN Producer.

- **Browse**—Opens the Open dialog and is used to select the Producer executable file.

NGRAIN Mobilizer Path—Used to establish the file path to NGRAIN's Mobilizer.

- **Browse**—Opens the Open dialog and is used to select the Mobilizer executable file.

Copyright © Right Hemisphere 2006. All Rights Reserved.

Object File Format Vector Graphics (.off)

You can view Object File Format Vector Graphic (.off) files.

For further information on using files, please see Opening Files (on page 42), Importing Files (on page 43), and Saving Files (on page 56).

Object File Format Vector Graphics Export (.off)

You can save files to the Object File Format Vector Graphics (.off) format.

For further information on using files, please see Opening Files (on page 42), Importing Files (on page 43), and Saving Files (on page 56).

Copyright © Right Hemisphere 2006. All Rights Reserved.

Open Inventor File Export (.iv)

You can save files to the Open Inventor (.iv) format.

For further information on using files, please see Opening Files (on page 42), Importing Files (on page 43), and Saving Files (on page 56).

Interface

Add indents—Indents the code within the saved file. This improves file readability.

Lights—Saves the light sources.

Cameras—Saves all cameras using the Viewpoint structure.

Default camera—Saves the default camera.

Normals—Saves all normals that are assigned to face vertices.

Texture coordinates—Saves all UV texture coordinates that are assigned to face vertices.

Polylines—Saves all vectors or polylines.

Export materials—Saves all materials that are used by mesh objects.

Open Inventor File Import (.iv)

You can import and view Open Inventor (.iv) files.

For further information on using files, please see Opening Files (on page 42), Importing Files (on page 43), and Saving Files (on page 56).

Support

- ASCII only, partially supported.

Interface

Flip coordinate system—Flips the Y and Z axes.

Collapse hierarchy—Merges the selected objects to collapse the hierarchy.

Optimize hierarchy—Reduces the number of coordinates in the array of per vertex normals.

Optimize geometry—Reduces the number of coordinates in the array of per vertex normals.

Generate UV for all objects—Creates UV mapping for objects that do not currently have mapping. This enables you to apply texture maps to the object.

Text quality—Determines the quality of the text if any is contained within the scene. The text is converted to polygon face entities. If a high value is specified, more points and lines are used and the vertex count increases.

Text extrude—Establishes the depth of the characters (extrusion) in the text. For example, a value of 0 results in the text being flat, and a value of 100 results in the text being the maximum thickness possible.

Copyright © Right Hemisphere 2006. All Rights Reserved.

OpenFlight Scene Description Database (.flt)

You can view OpenFlight Scene Description Database (.flt) files.

OpenFlight is an industry standard real-time 3D scene description format (.flt) developed, owned and maintained by MultiGen Inc. It was originally developed by MultiGen in response to a need for database transportability within the visual simulation community.

OpenFlight is the most widely used file format for visual simulation databases and is supported by dozens of vendors of real-time 3D tools. Military visual simulation includes: battle simulation, jet fighter flight simulation, tank simulation. Visual simulation also includes geo-specific terrain for accurate real-time fly-through of regions of the planet.

For further information on using files, please see Opening Files (on page 42), Importing Files (on page 43), and Saving Files (on page 56).

OpenFlight Scene Description Database Export (.flt)

You can save files to the OpenFlight Scene Description Database (.flt) format.

OpenFlight is an industry standard real-time 3D scene description format (.flt) developed, owned and maintained by MultiGen Inc. It was originally developed by MultiGen in response to a need for database transportability within the visual simulation community.

OpenFlight is the most widely used file format for visual simulation databases and is supported by dozens of vendors of real-time 3D tools. Military visual simulation includes: battle simulation, jet fighter flight simulation, tank simulation. Visual simulation also includes geo-specific terrain for accurate real-time fly-through of regions of the planet.

For further information on using files, please see Opening Files (on page 42), Importing Files (on page 43), and Saving Files (on page 56).

Limitations

- All geometry is imported, treating these unsupported nodes as simple group nodes. For example, Switch and LOF.
- All polygon sub-faces are grouped into special objects. These objects are rendered with a shift on the Z-axis. The amount of shift depends on the level of hierarchy. You can see this shift value in the Object Properties dialog.
- Currently, any specific texture data, like clamping, texture type (modulation, blend, decal, etc.) is ignored.
- Currently, only whole database referencing is supported.
- LOD nodes convert to application objects/groups. All LOD objects and their sub-objects with a switch-out distance of more than 0.0 are automatically hidden. So you can browse this file type with the highest resolution.
- The morph vertex node is interpreted simply as a vertex node. The first vertex from any pair is used.
- Unsupported nodes: Continuously Adaptive Terrain (CAT), Light Point, Binary Separating Planes, Sound, Road Segment/Path/Zone, Clip, and Text nodes.

Interface

Export vertices in local object space—Saves the vertices as they appear in local object space. Otherwise, they are saved as absolute vertex coordinates.

Export UVs—Exports all the UV coordinates.

Per vertex normals—Saves the array of per vertex normals in the file.

Per vertex colors—Saves the array of per vertex color in the file.

Use instances and references—Saves all instances and references in the file. This produces a smaller file size if the scene contains multiple copies of the same object. This option is only available when 'Export points in local object space' is selected.

Export color palette—Saves the color palette in the file.

Copyright © Right Hemisphere 2006. All Rights Reserved.

OpenGL CPP Code Export (.cpp)

You can save files to the OpenGL CPP Code file (.cpp) format.

These files are saved as series' of arrays with vertex positions, normals, texture coordinates and polygons included in the arrays. In addition, surface definitions (materials) associated with each polygon can be used to set up the OpenGL shading parameters.

For further information on using files, please see Opening Files (on page 42), Importing Files (on page 43), and Saving Files (on page 56).

Support

- Textures.

Interface

CPP code—Used to establish the type of CPP code that is generated and saved in the file.

- **Sample application**—Saves a .cpp file. This file contains the required information to compile and execute the resulting executable file. The executable file results in the 3D model rotating in the OpenGL Window.
- **Data only**—Saves all the arrays in the file.
- **Display list**—Saves all the arrays, code for generating the display list, and texture-loading code in the file.

Generate test application—Creates a sample application which includes a .cpp file. This file contains the required arrays and code for generating the display list and textures. This is useful for testing as you can build and run this without the need to make any coding changes. This option is only available when 'Display list' is selected as an export type.

Generate workspace and project files—Creates project .dsp and workspace .dsw files. This option is only available when 'Sample application' or 'Generate display list test application' is selected.

Items to Save—Used to establish which items in the scene to export.

- **Normals**—Saves the normals to the file. The vertex normals are converted to an array of normals. The array comprises all the normals used in the scene. They are in one coordinate system, unified, and are calculated using the application's current setting for smooth angle.
- **Texture coordinates**—Saves the texture coordinates to the file. The texture mapping coordinates (u/v coordinates) are converted to an array of textures. This array contains all the texture coordinates used in the scene. The texture coordinates are transformed with help of the material mapping parameters, U/V scale and U/V offset.
- **Texture maps**—Saves the texture maps, used by saved scene, as .bmp files in the same directory. The texture file name and OpenGL identifier are written to the .cpp file. The sample_TEXTURE texture_maps structure is used for storing information about texture maps. All texture maps are combined into a single array called texture_maps.
- **White materials**—Makes all materials without any textures completely white.
- **Material**—Includes materials from the saved scene into the CPP code. Each material is described by the MATERIAL structure and combined into a single array.

  Note: Further information about materials is included in the OpenGL documentation.

- **Compact vertices/normals/textures data**—Removes any duplicated vertex coordinates, texture mapping coordinates, and normals from the file.
- **Optimize index types**—Writes all faces as triangles in a single array called face_indicies. The types of items in the array include BYTE, SHORT, and GLint. The type used depends on the maximum index value. If a type is not selected, then by default the item is GLint.

Show hidden geometry—Saves hidden objects to file and adds the following code to the InitializeRC() function. This option is not available when 'Data only' is selected.

```
glDisable (GL_CULL_FACE);
glLightModeli(GL_LIGHT_MODEL_TWO_SIDE ,1);
```

Rescale—Used to establish the scale factor and pivot point of the model in the file.

- **No rescale**—Saves the model as the actual scene size. That is, it does not rescale the scene.
- **Standard**—Scales the model using a standard scale to best fit in the viewport. That is, the scale factor is 1.0 and the pivot point coordinates are 0, 0, 0.
- **Custom**—Scales the model using a non-standard scale to best fit in the viewport. Used to determine the custom scale factor and the coordinates of the pivot point.
  - **Maximum size**—Sets the scale factor.
  - **Pivot point**—Used to position pivot point using X, Y, and Z coordinates.

Copyright © Right Hemisphere 2006. All Rights Reserved.

Points File (.pts)

You can view Point (.pts) files.

Note: Point cloud data usually created by 3D scanners.

The file structure is designed to store the points situated in 3D (and also 2D) space.

For further information on using files, please see Opening Files (on page 42), Importing Files (on page 43), and Saving Files (on page 56).

Polygon File Format (.ply)

You can view Polygon File Format (.ply) files.

See also Opening Files **(on page 42)**, Importing Files **(on page 43)**, and Saving Files (on page 56).

Copyright © Right Hemisphere 2006. All Rights Reserved.

Portable Graymap Graphics File Import (.pgm)

You can import and view Portable Graymap Graphics (.pgm) 16-bit files. You can specify scale factors for each axis when importing these files.

The .pgm file format (PGM) is very basic and serves as the lowest common denominator for converting and exchanging graphics files between different platforms. PGM is a simple 16-bit grayscale image files and may be stored in either binary or ASCII format. It is related to the PBM (black and white) and PPM (pixelmap) graphics file formats.

While PGM is actually a 2D image format, Deep Exploration considers it a 3D scene; when a file of this nature is opened, a 3D plane is constructed and the application then uses the image as a height-map to distort the plane.

For further information on using files, please see Opening Files (on page 42), Importing Files (on page 43), and Saving Files (on page 56).

Interface

Scale X factor—Determines the size of the model along the X axis.

Scale Y factor—Determines the size of the model along the Y axis.

Scale Z factor—Determines the size of the model along the Z axis.

POV-Ray RAW Triangle (.raw)

You can view the POV-Ray RAW Triangle (.raw) files.

For further information on using files, please see Opening Files (on page 42), Importing Files (on page 43), and Saving Files (on page 56).

Copyright © Right Hemisphere 2006. All Rights Reserved.

POV-Ray RAW Triangle Export (.raw)

You can save the POV-Ray RAW Triangle (.raw) files.

The .raw format is a simple ASCII file that stores a list of triangles without any further topological information. This format is easy to produce so it is widely used in the computer graphics community.

- RAW Triangle files contain one triangle per row.
- Each row contains nine floating point numbers that represent the coordinates of the three triangle vertices.
- If in the text there is a non-blank line, which does not contain nine floating point numbers, it is perceived as the name of the object.
- A RAW Triangle file must have the file extension .raw for Deep Exploration to process it properly.
- All points within an object that have identical X, Y, and Z coordinates (coincident vertices) are joined.

For further information on using files, please see Opening Files (on page 42), Importing Files (on page 43), and Saving Files (on page 56).

Example

A simple example of a RAW Triangle file:

```
10.0 0.0 0.0 10.0 10.0 0.0 10.0 10.0 10.0
10.0 0.0 0.0 10.0 10.0 0.0 10.0 10.0 -10.0
0.0 10.0 0.0 0.0 10.0 10.0 20.0 0.0 10.0
```

Power Render Object (.pro)

You can view Power Render Object (.pro) files.

A .pro file is a binary description of a 3D object or scene. It includes information about the 3D mesh, textures, materials, cameras, and animation used to display a scene. The .pro format is chunk-based.

For further information on using files, please see Opening Files (on page 42), Importing Files (on page 43), and Saving Files (on page 56).

Limitations

- Animation.
- Cameras are not retrieved.

Copyright © Right Hemisphere 2006. All Rights Reserved.

Protein Data Bank Import (.pdb)

You can import and view Protein Data Bank (.pdb) files.

The .pdb file format describes the positions of atoms in a molecular structure. Protein files are used to convey a number of different views of atoms, molecules, and compounds. They can range from simple single atoms through to complex compounds. You can set visual complexity and quality aspects using the file's import options (on page 43).

For example, the following images show the carbon dioxide molecule and the insulin compound. The atoms are displayed as 'spacefill' and colored by 'chain'.

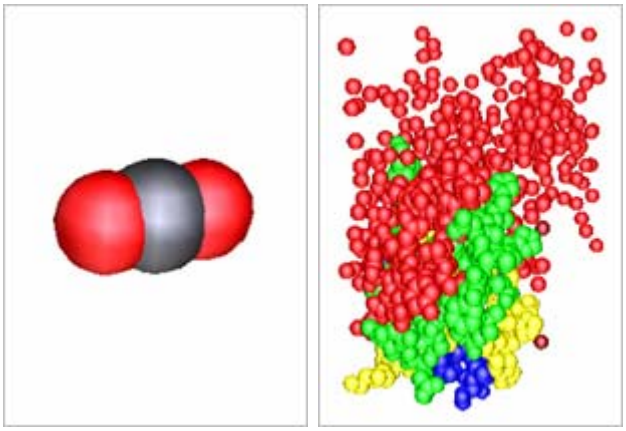

Carbon dioxide molecule / Insulin compound

Protein files function in the following manner:

- You can view molecular structures in a number of different ways including as wires and as backbones. This is helpful when viewing the structure of the compounds. For example, the following images show the nitroglycerine compound with the atoms displayed firstly as 'wire by residue' and then as 'balls and sticks by atom'.

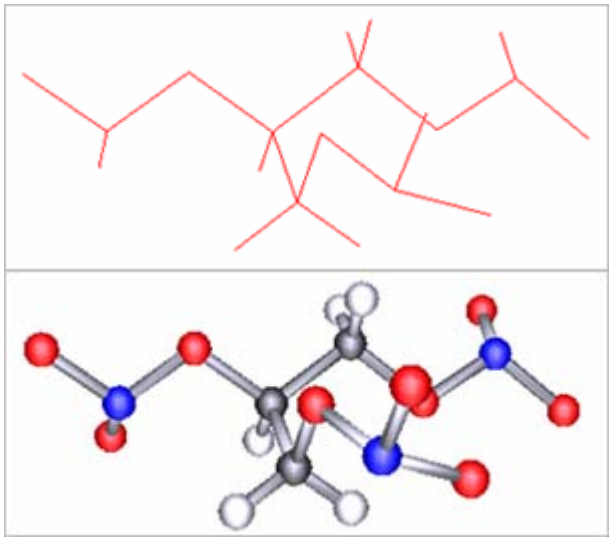

Nitroglycerine compound: Wire by residue / Balls and sticks by atom

- Components of the molecular structures can be displayed by color and their related materials appear uniquely in the Materials list. This enables you to identify components easily. For example, you could change the color of all oxygen molecules in a file.
- Compound objects are ordered in a hierarchical manner based on the compound's hierarchy. For example, chains, seqres, and residues. This helps with component selection.

- You can display multiples views simultaneously by merging the same file or different files (on page 54) into the current scene. For example, the following image shows the insulin compound with each chain displayed in a different view, and with water and zinc molecules deleted.

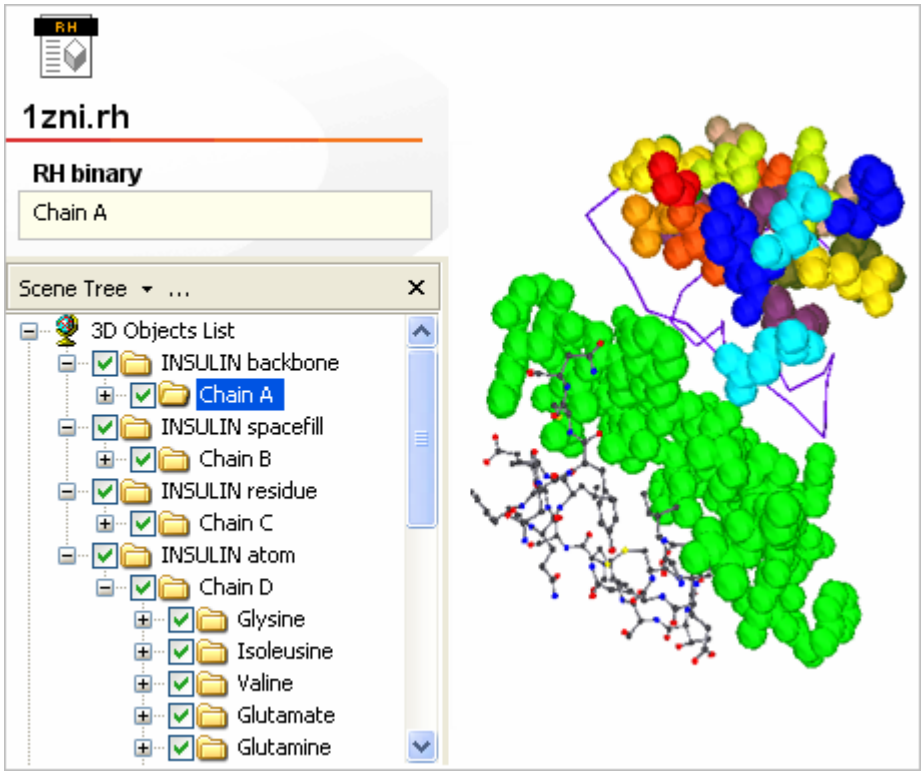

For further information on using files, please see Opening Files (on page 42), Importing Files (on page 43), and Saving Files (on page 56).

Interface

Sphere segments—The number of pieces into which spheres are divided.

Stick segments—The number of pieces into which sticks are divided.

View—Used to view the structure of the compound's components.

- **Wire—**Displays components as single connecting lines.
- **Balls and sticks—**Displays components as spheres and cylinders.
- **Spacefill—**Displays components as spheres representing the Van der Waals radii (http://en.wikipedia.org/wiki/Van_der_Waals_radius) of the atoms; the radii of imaginary hard spheres that are used to model atoms.
- **Backbones—**Displays components as paths of carbon chains in long chain molecules.

Note: Most simple molecules do not have backbones or residues. As such, there may be nothing visible if you select these options. Also, you cannot use the 'By atoms' color option when viewing compounds as backbones. The default setting should be to display as either wire, or as balls and sticks with spheres set to 10 and sticks set to 4, and then color by atom.

Color—Used to identify the various compound components.

- **Monochrome—**Displays a grayscale view of the components.
- **By atom—**Displays a color view of the atoms. Note that this option is not available when viewing compounds as backbones.
- **By residue—**Displays a color view of the compound's residue.

Copyright © Right Hemisphere 2006. All Rights Reserved.

Note: Most simple molecules do not have residues or backbones. As such, there may be nothing visible if you select these options. The default setting should be to display as either wire, or as balls and sticks with spheres set to 10 and sticks set to 4, and then color by atom.

- **By chain—**Displays a color view of the compound's chain.
- **Rainbow—**Displays the components in multiple colors. This is helpful for viewing complex compounds.

Quake Character Model I (.mdl)

You can view Quake Character Models I (.mdl) files.

The .mdl file format was developed by Quake for character modelling.

For further information on using files, please see Opening Files (on page 42), Importing Files (on page 43), and Saving Files (on page 56).

Support

- Texture coordinates.
- The first skin is used as the texture.

Limitations

- Only the first frame is used.
- The normals of vertices are ignored.

Copyright © Right Hemisphere 2006. All Rights Reserved.

Quake Character Model II (.md2)

You can view Quake Character Models II (.md2) files.

The .md2 file format is a custom format used only by Quake2 and Quake2 mission packs. MD2 files can be generated from various other file formats in their original and modified forms. A single .md2 file contains the model's geometry, frame information, skin file name and texture coordinates.

These files basically consists of a big list of triangles which then 'form' the animation. This format .md2 format has some restrictions. It is not skeleton-based, which means it is very difficult to turn parts of the model. For example, to move a head independently from the rest of the body. However, .md2 files are very easy to use and import; it can be used by almost every game without great problems.

For further information on using files, please see Opening Files (on page 42), Importing Files (on page 43), and Saving Files (on page 56).

Support

- Animation.
- Only the first frame is used.
- Only the first skin is used.
- Texture coordinates.

Limitations

- All GL commands are ignored.
- The LightNormalIndex of vertices is ignored.

Quake Character Model III (.md3)

You can view Quake Character Models III (.md3) files.

The .md3 file format uses vertex animation (also called morph target animation) and not skeletal animation. So will not find skeletons in these files. An .md3 model is normally made of three body parts and the weapon model.

For further information on using files, please see Opening Files (on page 42), Importing Files (on page 43), and Saving Files (on page 56).

Limitations

- Bones.
- Transparency in textures is supported only for 32-bit TGA files.

Copyright © Right Hemisphere 2006. All Rights Reserved.

Quake Map File (.map)

You can view Quake Map (.map) files.

For further information on using files, please see Opening Files (on page 42), Importing Files (on page 43), and Saving Files (on page 56).

Limitations

- Textures.

Quicktime 3D Metafile (.3dm, .3dmf)

You can view Quicktime 3D Metafile (.3dm and .3dmf) files. Only mesh geometry and material attributes are properly extracted from the file.

The .3dmf format (3D Metafile format) is the native file format for the Quicktime and QuickDraw 3D applications developed by Apple. The .3dmf format is a scene-description language for storing 3D data used in computer aided design. These files are often quite small because they store the geometry of the model instead of a picture.

For further information on using files, please see Opening Files (on page 42), Importing Files (on page 43), and Saving Files (on page 56).

Supported

- Binary files only, partially supported.

Copyright © Right Hemisphere 2006. All Rights Reserved.

RAX Extended RAW Triangles (.rax)

You can view RAX Extended RAW Triangle (.rax) files. This format lets you add texturing to your RAW models.

Each row of the extended RAW format contains 15 floating point numbers. The first nine of them represent the coordinates of the three triangle vertices (as in the simple RAW format). The second six numbers are texture coordinates for each triangle vertex. The last number (optional) is the texture index which is used for objects that require more than one texture. It is zero by default.

You can also define default texture maps for optional textures used in objects. It can be done by adding: Texture=TextureFileName.

For further information on using files, please see Opening Files (on page 42), Importing Files (on page 43), and Saving Files (on page 56).

Example

Here is an example of the Extended RAW format (Object MyRAWObject#1, uses two textures):

```
Texture0=c:\graph\tex1.jpg
Texture1=c:\graph\tex2.jpg

MyRAWObject#1
10.0 0.0 0.0 10.0 10.0 0.0 10.0 10.0 10.0 0.753 0.157 0.753 0.157 0.753
0.157 1
10.0 0.0 0.0 10.0 10.0 0.0 10.0 10.0 -10.0 0.753 0.169 0.263 0.220 0.722
0.220 1
0.0 10.0 0.0 0.0 10.0 10.0 20.0 0.0 10.0 0.251 0.514 0.412 0.431 0.169 0.525
0
```

Rhinoceros 3D Model Export (.3dm)

You can save files to the Rhinoceros 3D Model file (.3dm) format.

For further information on using files, please see Opening Files (on page 42), Importing Files (on page 43), and Saving Files (on page 56).

Support

- Curves and meshes.
- Points and point clouds (cluster of points).
- Light sources and cameras.
- Surfaces and BREPS.

Interface

Skip hidden objects—Does not export objects that are hidden.

Put all curves in single layer—Groups all curves together in one layer.

Export light sources—Exports all the light sources.

Export cameras—Exports the Rhino cameras.

Copyright © Right Hemisphere 2006. All Rights Reserved.

Rhinoceros 3D Model Import (.3dm)

You can import and view Rhinoceros 3D Model (.3dm) files.

The .3dm file format is the native file format of the Rhino3D modeling application developed by Rhinoceros. Rhino3D can create, edit, analyze, and translate NURBS curves, surfaces, and solids in Windows. There are no limits on complexity, degree, or size. Rhino also supports polygon meshes and point clouds.

For further information on using files, please see Opening Files (on page 42), Importing Files (on page 43), and Saving Files (on page 56).

Support

- All NURBS and mesh objects.
- Curves and meshes.
- Light sources and cameras.
- Materials are is converted into Deep Exploration's materials. Note that wire objects (points, points clouds, and curves) only have color and no materials. Therefore, the color is taken from the object or layer, then converted to a material.
- Object names and visibility.
- Points and point clouds (cluster of points).
- Surfaces and BREPS.

Limitations

- BREPs with only one face and one trivial trimming loop are imported as a surface with minor optimization.
- Polycurves are imported as one curve is they only have one segment.
- Viewports converted to cameras.

Interface

Skip objects in hidden layers—Only imports visible objects on visible layers. That is, visible objects on invisible layers are not imported.

Skip hidden objects—Only imports visible objects on visible layers. That is, invisible objects on visible layers are not imported.

Place all curves in single group—Groups all curves into one group. This object is labelled 'All curve groups'. This option takes priority over the 'Group objects by Rhino layers' option if both options are selected.

Group objects by Rhino layers—Groups all layer information into one group. The 'Place all curves in single group' option takes priority over this option if both options are selected.

Double-sided surfaces—Imports surfaces as double-sided.

Split BREP faces into separate objects—Expands the BREP object groups. That is, expands the object hierarchy tree to display BREP objects, parts, and sub-parts.

Note: BREPs with only one face are imported as one node and not two, if the 'Split BREP faces into separate objects' option is selected.

Import lights—Imports all Rhino lights.

Import cameras—Imports all Rhino cameras and uses them to view the model.

Right Hemisphere Binary (.rh)

You can view Right Hemisphere Binary (.rh) files.

The .rh file format was developed by Right Hemisphere. (http://www.righthemisphere.com)

For further information on using files, please see Opening Files (on page 42), Importing Files (on page 43), and Saving Files (on page 56).

Copyright © Right Hemisphere 2006. All Rights Reserved.

Right Hemisphere Binary Export (.rh)

You can save files to the Right Hemisphere Binary file (.rh) format.

The .rh file format was developed by Right Hemisphere. (http://www.righthemisphere.com) Using it you can save keyframe animation information, normals, and skins. You can also choose to compress the exported file, or compress points within the file, apply protection, save the file for different application versions, and create thumbnails of varying sizes.

'Lossy' (loss of data) compression can be used to compress .rh files; lossy compression treats two vertices that are sufficiently close to each other as one, resulting in image size and quality.

For further information on using files, please see Opening Files (on page 42), Importing Files (on page 43), and Saving Files (on page 56).

Interface

Compression—Reduces the model's file size while maintaining the quality. Compression helps to reduce the amount of storage and transmission bandwidth required for 3D models.

RH4 compression—Used to establish the compression settings when saving to the DE 4.0 version of the .rh file.

- **Dictionary size**—Determines the size of the dictionary size to use for compression. The larger the size of the dictionary, the better the compression.
- **Compression mode**—Determines the type of the compression with which to export the file. The faster the compression, the faster the file is saved but the larger the resulting file.
  - **Very Fast**—Compresses the file using a low level of compression. This creates the largest file. However, the compression speed is very fast.
  - **Fast**—Compresses the file using a medium level of compression.
  - **Normal**—Compresses the file using a high level of compression.
  - **Best**—Compresses the file using the maximum level of compression. This creates a very small file. However, the compression speed is very slow.

Export animation—Saves the keyframe animation in the file.

Export skin—Saves the model's skin in the file. Note that if a model contains skin animation and this option is not checked, the animation is lost.

Vertices quality—Used to establish the percentage of the data about the file's vertices to keep. Lossy compression is used here. Once you have compressed the vertices data, this information is lost. That is, you cannot reverse this compression. Note that this option is only available when you save using the file version DE 4.0.

- **[percentage]**—Used to select the percentage of data to keep.

UV points quality—Used to establish the percentage of the data about the file's UV points to keep. Lossy compression is used here. Once you have compressed the UV point data, this information is lost. That is, you cannot reverse this compression. Note that this option is only available when you save using the file version DE 4.0.

- **Off**—Does not compress the file's UV points.
- **[percentage]**—Used to select the percentage of data to keep.

Normals quality—Used to establish the percentage of the data about the file's normals to keep. Lossy compression is used here. Once you have compressed the normals data, this information is lost. That is, you cannot reverse this compression. Note that this option is only available when you save using the file version DE 4.0.

- **Off**—Does not compress the file's normals.

- **[percentage]**—Used to select the percentage of data to keep.

File protection—Protects the exported file. Once the file is protected, you cannot save the file to any format other than the .rh format. This is helpful if you want to distribute a proprietary model to people who need to see the file, but should not edit or copy it. For example, if a company's Web site features an online parts catalog which displays their parts, and the company does not want their competitors obtaining useable copies of these parts.

Note: The file's name, path, and protection status is displayed in the application's title bar.

Export viewports (on page 61)—Saves the current viewport layout in the file.

Version—Used to establish in which version to save the file.

- **DE 3.5**—Saves the model as a Deep Exploration version 3.5 file.
- **DE 4.0**—Saves the model as a Deep Exploration version 4.0 file.

Thumbnail—Creates the specified size thumbnail image of the current model. The thumbnail image displays any setting that have been applied to the model. The thumbnail is displayed in Microsoft's Windows Explorer program (with Thumbnail view turned on). Alternately you can select to not create a thumbnail image.

- **No thumbnail**—Does not create a thumbnail.
- **[size]**—Creates a thumbnail of the specified width and height, in pixels.

Copyright © Right Hemisphere 2006. All Rights Reserved.

Shockwave 3D File Export (.w3d)

You can save files to the Shockwave 3D File (.w3d) format.

The .w3d file format was developed by Macromedia. This format can be published to the Shockwave .html format (on page 481) for Internet use.

For further information on using files, please see Opening Files (on page 42), Importing Files (on page 43), and Saving Files (on page 56).

Interface

Compression—Reduces the model's file size to the specified level of quality. Compression helps to reduce the amount of storage and transmission bandwidth required for 3D models.

- **Geometry quality**—Compresses the geometry to the specified percentage of quality.
- **Animation quality**—Compresses the animation to the specified percentage of quality.
- **Texture quality**—Compresses the texture maps to the specified percentage of quality.

Texture Maps—Used to establish whether to export texture maps and the size of the texture maps.

- **Export textures**—Exports the texture maps. Otherwise, the texture maps are not exported.
  - **No limit to textures size**—Does not scale the texture map. The texture map is saved as its current size.
  - **512x512**—Scales the texture map to a maximum size of 512x512 pixels.
  - **256x256**—Scales the texture map to a maximum size of 256x256 pixels.
  - **128x128**—Scales the texture map to a maximum size of 128x128 pixels.

Additional—Used to establish miscellaneous settings.

- **Export animation**—Exports the animation.
- **Progress bar**—Displays the Exporting Model and the Compiling ShockWave 3D Mesh progress bars in the 'Save 3D File' dialog as the .w3d file is being saved.
- **Report W3D file contents**—Displays information about the .w3d file in the Shockwave 3D File Analysis dialog. This information includes the proportion of the file that each item uses, the file size in KB, the Initial Load Segment (ILS) size, and the amount of RAM required by the textures.
- **Preview exported scene**—Displays a 3D Flash preview of the file. The preview only displays geometry, mats, and textures. It does not display animation.

Shockwave Web Page Export (.html)

You can save files to the Shockwave Web Page file (.html) format.

The Shockwave .html format is the Internet supported version of the Shockwave .w3d file format (on page 480), developed by Macromedia.

For further information on using files, please see Opening Files (on page 42), Importing Files (on page 43), and Saving Files (on page 56).

Interface

Compression—Reduces the model's file size to the specified level of quality. Compression helps to reduce the amount of storage and transmission bandwidth required for 3D models.

- **Geometry quality**—Compresses the geometry to the specified percentage of quality.
- **Animation quality**—Compresses the animation to the specified percentage of quality.
- **Texture quality**—Compresses the texture maps to the specified percentage of quality.

Texture Maps—Used to establish whether to export texture maps and the size of the texture maps.

- **Export textures**—Exports the texture maps. Otherwise, the texture maps are not exported.
  - **No limit to textures size**—Does not scale the texture map. The texture map is saved as its current size.
  - **512x512**—Included the texture maps scaled to a maximum size of 512x512 pixels.
  - **256x256**—Included the texture maps scaled to a maximum size of 256x256 pixels.
  - **128x128**—Included the texture maps scaled to a maximum size of 128x128 pixels.

Additional—Used to establish miscellaneous settings.

- **Export animation**—Exports the animation.
- **Progress bar**—Displays the Exporting Model and the Compiling ShockWave 3D Mesh progress bars in the 'Save 3D File' dialog as the .w3d file is being saved.
- **Report W3D file contents**—Displays information about the .w3d file in the Shockwave 3D File Analysis dialog. This information includes the proportion of the file that each item uses, the file size in KB, the Initial Load Segment (ILS) size, and the amount of RAM required by the textures.
- **Preview exported scene**—Displays a 3D Flash preview of the file. The preview only displays geometry, mats, and textures. It does not display animation.

Copyright © Right Hemisphere 2006. All Rights Reserved.

SOFTIMAGE|XSI Export (.xsi)

You can save files to the SOFTIMAGE|XSI file (.xsi) format.

The .xsi file format is an ASCII file format defined by Softimage Co. to store SOFTIMAGE 3D and SOFTIMAGE XSI scene data. The file format allows the import and export of characters, models, and animation for complete customizability of any game-development pipeline. The file format lets you include user data, making it straightforward to introduce new types of custom information.

For further information on using files, please see Opening Files (on page 42), Importing Files (on page 43), and Saving Files (on page 56).

Support

- Animation.

Interface

General—Used to establish general export settings.

- **Version**—Used to establish in which version of the format to save the file.
  - **XSI 3.5 realtime materials**—Saves the model as a SOFTIMAGE|XSI version 3.5 file with realtime materials. Realtime materials are technically equivalent to realtime shaders.
  - **XSI 3.5 Softimage materials**—Saves the model as a SOFTIMAGE|XSI version 3.5 file with Softimage materials.
  - **XSI 3.0**—Saves the model as a SOFTIMAGE|XSI version 3.0 file.
- **Export materials**—Saves the mesh object materials in the file.
- **Export normals**—Saves any face vertex normals in the file.
- **Export textures**—Saves any face vertex UV information in the file.
- **Add top level frame**—Adds a single frame to the file if more than one object does not have a parent object. This option is is only available when 'Change axes (swap y and z)' is not selected.
- **Invert normals**—Inverts the direction of each vertex normal to point in the opposite direction.
- **Add indents**—Indents the code in the file. This is used to improve file readability.
- **Export per vertex color**—Exports the 'Array of per vertex color' geometry item.
- **Swap Y and Z axes**—Switches the Y axis with the Z axis.
- **Create dummy objects**—Duplicates the objects in the Scene tree to create dummy objects. The dummy objects are not displayed in the viewport and do not have any physical properties. They have the following properties: position, rotation, scale, shear, and transformation matrix.
- **XSI 2.0 compatibility**—Saves the model with backward compatibility to version 2.0 of the .xsi file format.

Animation—Used to establish the animation export settings.

- **Export animation**—Saves the animation to the file.
- **Rescale animation**—Used to change the length of the animation.
- **Rescale type**—Used to select how to rescale the animation.
  - **Length in (cs)**—Rescales the animation length by the specified length in centiseconds.
  - **By percent**—Rescales the animation length by the specified percentage. For example, a 50-second animation scaled by 150% would be 75 seconds long.
- **Centiseconds**—Determines the length of the animation in centiseconds.
- **Percent**—Determines the amount of scaling to apply to the animation if the 'Change animation to' option is selected.

- **Reverse animation sequence**—Reverses the animation sequence from moving forwards to backwards.
- **Remove redundant keys**—Removes duplicate animation keys from the exported file. The exported animation plays with the same or similar behaviour, but with fewer keys.
- **Sample animation**—Samples the animation sequence at the specified sampling rate.
- **Sample frames**—Determines the rate at which the animation is sampled.

Copyright © Right Hemisphere 2006. All Rights Reserved.

SOFTIMAGE|XSI (.xsi)

You can view SOFTIMAGE|XSI (.xsi) files.

The .xsi file format is an ASCII file format defined by Softimage Co. to store SOFTIMAGE 3D and SOFTIMAGE XSI scene data.

For further information on using files, please see Opening Files (on page 42), Importing Files (on page 43), and Saving Files (on page 56).

Support

- Animation.

Universal 3D Export (.u3d)

You can save files to the Universal 3D (.u3d) format.

The .u3d format, adopted by Adobe, is required and used as the 3D publishing format in Adobe Acrobat. U3D files can be inserted into PDF documents to view the 3D content in Adobe Acrobat or Adobe Reader.

For further information about the .u3d file format, please see www.3dif.org (http://www.3dif.org). For further information on using files, please see Opening Files (on page 42), Importing Files (on page 43), and Saving Files (on page 56).

Note: Adobe PDF files are also supported, including those that contain 3D content.

Support

- Textures.

Limitations

- The .u3d format does not support pivot points so pivot point locations may be incorrect. To correct this, create a group node at the location of the original object's pivot point. The original object appears as a child of this node. To rotate the object about its original pivot point, select the new parent node and rotate it.

Interface

Compression type—Used to select the file format to which to compress and save all textures.

- **JPEG**—Exports all textures in the JPEG file format.
- **PNG**—Exports all textures in the PNG file format.

JPEG compression—Used to select the quality at which files are saved when saving to the JPEG format.

- **JPEG Quality %**—Compresses the JPEG files to the specified percentage of quality.

Normals—Exports all surface normals. Using this option creates more appealing looking models but larger files.

Default camera (on page 61)—Saves the default camera view in the file. For example, if you open a scene, rotate it, and export it to the .u3d format with this option selected, that view is used when you open the .u3d file.

Extended material info—Preserves the model's material specular level specified in the original file. Otherwise, the specular level is set to 100.

Append data to non-unique names—Appends '##' followed by a number to all the non-unique object names in a scene. This creates a unique name for all the objects in a scene. This is very important as the u3d format requires a unique name for each scene object.

Copyright © Right Hemisphere 2006. All Rights Reserved.

Universal 3D Import (.u3d)

You can import and view Universal 3D (.u3d) files.

The .u3d format, adopted by Adobe, is required and used as the 3D publishing format in Adobe Acrobat. It can store meshes in two different ways: as a base mesh or as a progressive continuous level of detail (CLOD) mesh. Base meshes are not compressed, and do not include any level-of-detail. As such, these files are saved very quickly but are large in size. A progressive mesh is highly compressed and has a continuous level of detail. These files are smaller than base mesh files; however they take much longer to save.

A mesh can consist of multiple parts. For example, a mesh could comprise 80 vertices made up of 50 base vertices and 30 progressive vertices.

For further information about the .u3d file format, please see www.3dif.org (http://www.3dif.org). For further information on using files, please see Opening Files (on page 42), Importing Files (on page 43), and Saving Files (on page 56).

Interface

Import LOD (on page 263)—Imports LOD with the current file. Otherwise, the highest level of detail is imported.

Parse metadata—Reads all metadata information including markups and material specular level metadata.

Remove append data from names—Removes the '##' and the number from the objects' names if the names contain these characters.

LOD—Used to establish the level of detail (LOD) to import. U3D files store a continuous LOD; that is, every LOD is stored. LOD is a way of displaying models with different numbers of polygons depending on how close they are to the camera using the Level of Detail controls. This can speed up the rendering time by limiting the number of polygons that need to be drawn.

- **Levels**—The number of LODs that you want to import. The higher the number, the more information is imported.
- **Create LOD if mesh has minimum vertices**—Creates the LOD if a single mesh has more than this number of vertices. For example, if you enter 200 here, LODs are created if a mesh has at least 200 vertices. Otherwise, no LODs are created. This is helpful where models comprise very small meshes with a small number of vertices, as LODs created for models such as these would be too small to be visible.
- **Create LOD if minimum vertices in file**—Creates the LOD if the total number of vertices in a file is more than the specified number of vertices.
- **Minimum vertices per mesh**—For example, the total number of vertices is 50,000, and the number of mesh vertices is 50. A LOD is not created if you import a file with a total of 47,000 vertices and at least 60 vertices per mesh. However, a LOD is created if the file contains a total of 55,000 vertices and at least 55 vertices per mesh.

Unreal Character File (.psk)

You can view Unreal Character (.psk) files.

For further information on using files, please see Opening Files (on page 42), Importing Files (on page 43), and Saving Files (on page 56).

Copyright © Right Hemisphere 2006. All Rights Reserved.

VRML Worlds Export (.wrl, .vrml)

You can save to the VRML (Virtual Reality Modeling Language Worlds) (.wrl, .vrml) formats.

The .wrl file format is a file format that is widely used by the Internet community to represent and navigate 3D hyper-linked virtual worlds. VRML is mainly a graphics format that represents simple solid primitives (for example, spheres and cylinders), polygons, polylines, and their visual attributes.

The Virtual Reality Modeling Language (VRML) is a language for describing multi-participant interactive simulations-virtual worlds networked via the global Internet and hyper-linked with the World Wide Web. All aspects of virtual world display, interaction and internetworking can be specified using VRML. It is the intention of its designers that VRML become the standard language for interactive simulation within the World Wide Web.

For further information on using files, please see Opening Files (on page 42), Importing Files (on page 43), and Saving Files (on page 56).

Interface

Version—Saves the file to the selected VRML language version.

- **VRML 1.0**—Saves the file to version 1.0 of the VRML language.
- **VRML 2.0**—Saves the file to version 2.0 of the VRML language.

Add indents—Inserts indentations to the output file. This helps to keep the file readable.

Flip coordinate system—Rotates the model so it uses a left-hand coordinate system. That is, it flips the Y and Z axes.

Export lights—Saves all light sources in the output file.

Export cameras—Saves all cameras using the Viewpoint structure.

Export default camera—Saves the default camera.

Export normals—Saves all normals that are assigned to face vertices.

Export texture coordinates—Saves all UV texture coordinates that are assigned to face vertices.

Export polylines—Saves all vectors or polylines.

Export materials—Saves all materials that are used by mesh objects.

VRML Worlds Import (.wrl, .vrml)

You can import and view VRML (Virtual Reality Modeling Language Worlds) Worlds (.wrl, .vrml) files.

The .wrl and .vrml file formats are file formats that are widely used by the Internet community to represent and navigate 3D hyper-linked virtual worlds. VRML is mainly a graphics format that represents simple solid primitives (for example, spheres and cylinders), polygons, polylines, and their visual attributes.

The VRML is a language for describing multi-participant interactive simulations - virtual worlds networked via the global Internet and hyper-linked with the World Wide Web. All aspects of virtual world display, interaction and internetworking can be specified using VRML. It is the intention of its designers that VRML become the standard language for interactive simulation within the World Wide Web.

For further information on using files, please see Opening Files (on page 42), Importing Files (on page 43), and Saving Files (on page 56).

Support

VRML 1.0

- Fully supported.

Limitations

- Lights and fog data are ignored.
- Textures are not mapped to text objects.
- Transparency in textures is ignored.
- URL links are discarded.

VRML 2.0

- Animation data are ignored.
- In/Out Events are not supported.
- Nested PROTO nodes are not supported.
- ROUTE ignored.
- Scripts are not supported.
- Vertex colors and line colors, and cells in Elevation Grids, are not supported.

Interface

Flip coordinate system—Rotates the model so it uses a right-hand coordinate system. That is, it flips the Y and Z axes.

Collapse hierarchy—Merges the selected objects to collapse the hierarchy.

Optimize hierarchy—Removes redundant nodes fro the scene.

Optimize geometry—Reduces the number of coordinates in the array of per vertex normals.

Create UVs—Creates UV mapping for objects that do not currently have mapping. This enables you to apply texture maps to the object.

Text quality—Determines the quality of the text. If a scene contains text, the text is converted to polygon face entities. If a high value is specified, more points and lines are used and the vertex count increases.

Copyright © Right Hemisphere 2006. All Rights Reserved.

Text extrusion—Establishes the extrusion of the text. That is, the depth of the characters in the text. For example, a value of 0 results in the text being flat, and a value of 100 results in the text being the maximum thickness possible.

Wavefront Object Export (.obj)

You can save files to the Wavefront Object (.obj) format.

The .obj file format was developed for the Wavefront application acquired by Alias. The format stores a description of the surface of a 3D object, composed of triangles or higher degree polygons.

For further information on using files, please see Opening Files **(on page 42)**, Importing Files (on page 43), and Saving Files (on page 56).

Support

- Associated materials are exported as .mtl files (on page 522).
- Groups are read as separate objects.
- Polygonal objects and free-form objects. Polygonal geometry uses points, lines, and faces to define objects while free-form geometry uses curves and surfaces. Deep Exploration reads only polygonal geometry.
- Texture coordinates.

Example

The following is an example of an .obj file:

```
v 0.000000 2.000000 2.000000
v 0.000000 0.000000 2.000000
v 2.000000 0.000000 2.000000
v 2.000000 2.000000 2.000000
v 0.000000 2.000000 0.000000
v 0.000000 0.000000 0.000000
v 2.000000 0.000000 0.000000
v 2.000000 2.000000 0.000000
f 1 2 3 4
f 8 7 6 5
f 4 3 7 8
f 5 1 4 8
f 5 6 2 1
f 2 6 7 3
```

Interface

Compact data—Optimizes all vertices, normals, and texture coordinates by and compresses the data by removing any duplicate items.

Create material file—Saves all material information in the .mtl file.

Export vertex normals—Saves the vertex normals in the .obj file.

Export texture coordinates—Saves any (u,v) texture coordinates that are assigned to face vertices in the .obj file.

Triangulate non-flat polygons

Flip coordinate system—Rotates the model so it uses a left-hand coordinate system. That is, it flips the Y and Z axes.

Create SubD control mesh—Creates low detail, low polygon count subdivision control mesh with models that contain subD's. This mesh is subdividable.

Max vertices in polygon—Exports polygons containing less than or equal to the specified number of vertices. This reduces the file size.

Copyright © Right Hemisphere 2006. All Rights Reserved.

Replace material colors—Replaces material colors (ambient, diffuse, and specular) with 'white' if the same texture is present and if the texture blending mode (on page 284) is set to 'Replace'. This ensures the saved file more closely resembles the source scene.

Wavefront Object Import (.obj)

You can import and view Wavefront Object (.obj) files.

The .obj file format was developed for the Wavefront application developed by Alias. The format stores a description of the surface of a 3D object, composed of triangles or higher degree polygons.

For further information on using files, please see Opening Files **(on page 42)**, Importing Files (on page 43), and Saving Files (on page 56).

The .objf file format (a derivative of the .obj format) is also supported. Stripe files have the following file structure:

- **Vertex data:** Geometric vertices (v), texture vertices (vt), and vertex normals (vn).

Note: Vertices, textures and normals are each sequenced from 1.

- **Elements data:** Triangle strip (t) and triangle strip continuation (q).

Note: There are no import options associated with the .objf file format.

Example

The following is an example of Stripe file:

```
v 0.000000 0.000000 1.000000 # Vertex 1
v 1.000000 1.000000 0.000000 # Vertex 2
v 2.000000 0.000000 0.000000 # Vertex 3
v 3.000000 1.000000 0.000000 # Vertex 4
v 4.000000 0.000000 0.000000 # Vertex 5
v 3.000000 -1.000000 0.000000 # Vertex 6
v 4.000000 -1.000000 0.000000 # Vertex 7
v 2.000000 2.000000 0.000000 # Vertex 8
v 3.000000 2.000000 0.000000 # Vertex 9
v 3.000000 3.000000 0.000000 # Vertex 10
t 10 9 8 # Start of triangle strip 1
q 4 # Continuation of triangle strip 1
q 2 # Continuation of triangle strip 1
q 3 1 # Continuation of triangle strip 1
t 3 4 3 5 # Start of triangle strip 2
q 6 7 # Continuation of triangle strip 2
```

Interface

Import material file—Imports all material information from the .mtl file.

Flip coordinate system—Rotates the model so it uses a right-hand coordinate system. That is, it flips the Y and Z axes.

Copyright © Right Hemisphere 2006. All Rights Reserved.

Appendix C: Audio File Formats

The following audio file formats are supported by Deep Exploration CAD and Standard Editions and Deep Server. This list is organized alphabetically by file format.

File Format	Type	Extension	View/ Import	Export	Version/Notes
Audio Interchange Format	Audio	AIF, AIFF	Yes (on page 495)		Play only.
MPEG Audio Files	Audio	MPA, MP2, MP3	Yes (on page 496)		Play only.
Musical Instrument Digital Interface	Audio	MID, MIDI	Yes (on page 497)		Play only.
RIFF MIDI File	Audio	RMI	Yes (on page 498)		Play only.
Sound Format	Audio	SND	Yes (on page 499)		Play only.
Sun/NeXT/DEC Audio	Audio	AU	Yes (on page 500)		Play only.
Waveform Audio	Audio	WAV	Yes (on page 501)		Play only.

Audio Interchange Format (.aif, .aiff)

You can listen to Audio Interchange Format (.aif, .aiff) files.

The .aif and .aiff file formats were developed by Apple. AIF and AIFF files are not cross-platform and they are not supported by all Web browsers.

Note: When you open an audio file (on page 260), sound controls are displayed underneath the viewport. These allow you to control the sound.

For further information on using files, please see Opening Files **(on page 42)**, Importing Files (on page 43), and Saving Files (on page 56).

Copyright © Right Hemisphere 2006. All Rights Reserved.

MPEG Audio File Format (.mpa, .mp2, .mp3)

You can listen to MPEG Audio File Format (.mpa, .mp2, .mp3) files.

MP3 files are actually MPEG files. But the MPEG format was originally developed for video by the Moving Pictures Experts Group. We can say that MP3 files are the sound part of the MPEG video format.

MP3 is one of the most popular sound formats for music recording. The MP3 encoding system combines good compression (small files) with high quality: It is an audio compression format capable of a significant reduction in the amount of data required to reproduce audio, while sounding like an exact reproduction of the original audio. Expect all your future software systems to support it.

Note: When you open an audio file (on page 260), sound controls are displayed underneath the viewport. These allow you to control the sound.

For further information on using files, please see Opening Files **(on page 42)**, Importing Files (on page 43), and Saving Files (on page 56).

Musical Instrument Digital Interface (.mid, .midi)

You can listen to Musical Instrument Digital Interface (.mid, .midi) files.

The MIDI (Musical Instrument Digital Interface) is a format for sending music information between electronic music devices like synthesizers and PC sound cards. It was developed in 1982 - long before the Internet -, but since it was developed by the music industry, it is very flexible and can be used for everything from very simple to real professional music making.

MIDI files do not contain sampled sound, but a set of digital musical instructions (musical notes) that can be interpreted by your PC's sound card.

The downside of MIDI is that it cannot record sounds (only notes). Or, to put it another way: It cannot store songs, only tunes. The upside of the MIDI format is that since it contains only instructions (notes), MIDI files can be extremely small. The example above is only 23K in size but it plays for nearly 5 minutes.

The MIDI format is supported by many different software systems over a large range of platforms. MIDI files are supported by all the most popular Internet browsers.

Note: When you open an audio file (on page 260), sound controls are displayed underneath the viewport. These allow you to control the sound.

For further information on using files, please see Opening Files **(on page 42)**, Importing Files (on page 43), and Saving Files (on page 56).

Copyright © Right Hemisphere 2006. All Rights Reserved.

RIFF MIDI File (.rmi)

You can listen to RIFF MIDI File (.rmi) files.

The .rmi file format is actually a MIDI (Musical Instrument Digital Interface) file stored in the RIFF (Resource Interchange File Format). The .rmi file can store various file formats and resources including audio and image data. Note that this file format may not contain audio information.

Note: When you open an audio file (on page 260), sound controls are displayed underneath the viewport. These allow you to control the sound.

For further information on using files, please see Opening Files **(on page 42)**, Importing Files (on page 43), and Saving Files (on page 56).

Sound Format (.snd)

You can listen to Sound Format (.snd) files.

The .snd file format was developed by Apple. SND files are not cross-platform and the format is not supported by all Web browsers.

Note: When you open an audio file (on page 260), sound controls are displayed underneath the viewport. These allow you to control the sound.

For further information on using files, please see Opening Files **(on page 42)**, Importing Files (on page 43), and Saving Files (on page 56).

Copyright © Right Hemisphere 2006. All Rights Reserved.

Sun/NeXT/DEC Audio (.au)

You can listen to Sun/NeXT/DEC Audio (.au) files.

The .au format is supported by many different software systems over a large range of platforms.

Note: When you open an audio file (on page 260), sound controls are displayed underneath the viewport. These allow you to control the sound.

For further information on using files, please see Opening Files **(on page 42)**, Importing Files (on page 43), and Saving Files (on page 56).

Waveform Audio (.wav)

You can listen to Waveform Audio (.wav) files.

The .wave file format was developed by IBM and Microsoft. It is supported by all computers running Windows, and by all the most popular Web browsers.

Note: When you open an audio file (on page 260), sound controls are displayed underneath the viewport. These allow you to control the sound.

For further information on using files, please see Opening Files **(on page 42)**, Importing Files (on page 43), and Saving Files (on page 56).

Copyright © Right Hemisphere 2006. All Rights Reserved.

Appendix D: Video File Formats

The following video file formats are supported by Deep Exploration CAD and Standard Editions and Deep Server. This list is organized alphabetically by file format.

File Format	Type	Extension	View/ Import	Export	Version/Notes
Advanced Streaming Format	Video	ASF	Yes (on page 503)		
Audio Video Interleave Animation	Video	AVI	Yes (on page 504)	Yes (on page 505)	
Moving Pictures Expert Group Video	Video	M1V, MPEG, MPG	Yes (on page 506)		

Advanced Streaming Format (.asf)

You can view Advanced Streaming (.asf) files.

The .asf file format stores audio and video information and is specially designed to run over networks, such as the Internet. It is a highly flexible and compressed format that contains streaming audio, video, slide shows, and synchronized events.

For further information on using files, please see Opening Files **(on page 42)**, Importing Files (on page 43), and Saving Files (on page 56).

Support

- First frame only.

Copyright © Right Hemisphere 2006. All Rights Reserved.

Audio Video Interleave Animation (.avi)

You can view Audio Video Interleave Animation (.avi) files.

The .avi file format is Microsoft's Video for Windows standard and was developed for storing video and audio information.

For further information on using files, please see Opening Files **(on page 42)**, Importing Files (on page 43), and Saving Files (on page 56).

Audio Video Interleave Animation Export (.avi)

You can save files to the Audio Video Interleave Animation (.avi) format.

The .avi file format is Microsoft's Video for Windows standard and was developed for storing video and audio information.

For further information on using files, please see Opening Files **(on page 42)**, Importing Files (on page 43), and Saving Files (on page 56).

Limitation

- To AVI format only; no conversion available.

Interface

Compressor—Selects the type of compression to apply to the file.

Compression Quality—Determines the quality with which to save the file.

Note: Not available for Intel IYUV codec, DiVX® 5.1.1 codec, or Full Frames (uncompressed).

Key frame every [number] frames—Determines the pixels that comprise each complete frame. The higher this value, the lower the quality and file size of the exported file.

Data rate [number] KB/sec—Opens the Cinepak for Windows 32 dialog and is used to determine the bandwidth requirements of the video and the amount of data to be transmitted for each frame.

Configure—Opens the dialog for the selected Compressor and compresses the file to either color or black and white.

Note: Not available for Intel Indeo® Video R3.2, Intel R3.2, Intel IYUV, for Full Frames (uncompressed).

About—Opens the dialog for the selected Compressor and displays its release information.

Note: Not available for Full Frames (uncompressed).

Copyright © Right Hemisphere 2006. All Rights Reserved.

Moving Pictures Expert Group Video Format (.m1v, .mpeg, .mpg)

You can view Moving Pictures Expert Group Video (.m1v, .mpeg, .mpg) files.

The .m1v, .mpeg, .mpg file formats are the standard formats used on Video CDs and DVDs. MPEG is used to encode audio, video, text, and graphical data within a single, synchronized data stream.

For further information on using files, please see Opening Files **(on page 42)**, Importing Files (on page 43), and Saving Files (on page 56).

Support

- First frame only.

Appendix E: Motion Capture File Formats

The following motion capture file formats are supported by Deep Exploration CAD and Standard Editions and Deep Server. This list is organized alphabetically by file format.

File Format	Type	Extension	View/ Import	Export	Version/Notes
BioVision Hierarchical Data	Skeleton	BVH	Yes (on page 510)	Yes (on page 508)	
Character Studio	Marker	CSM	Yes (on page 512)	Yes (on page 511)	
Character Studio - Sub-format of BioVision Hierarchical Data	Skeleton	BVH (CS)	Yes (on page 510)	Yes (on page 508)	
Coordinate 3D	Marker	C3D	Yes (on page 513)		
Hierarchical Translations and Rotations	Skeleton	HTR	Yes (on page 514)		
Tracked Row Binary	Marker	TRB	Yes (on page 515)		
Tracked Row Character	Marker	TRC	Yes (on page 517)	Yes (on page 516)	

Copyright © Right Hemisphere 2006. All Rights Reserved.

BioVision Hierarchical Data and Character Studio Sub-Format Export (.bvh)

You can save files to the BioVision Hierarchical Data (.bvh) format. You can also enforce Character Studio restrictions that allow .bvh files to be read by Character Studio.

The BVH file format was originally developed by Biovision, a motion capture services company. It provides skeleton hierarchy information in addition to the motion capture data information. You can enforce Character Studio restrictions when exporting to the .bvh file format, allowing exported skeleton files to be read by Character Studio.

The Character Studio BVH motion capture file format is an ASCII file that is used to import rotational joint data from various motion capture systems into Character Studio to animate bipedal characters. These files are divided into two major sections: Hierarchy and Motion. The Hierarchy section describes the joint-to-joint connections and offsets for the sampled motion data, and the Motion section describes the movement of these individual joints on a per-sample basis.

Note: When exporting to the .bvh format, Character Studio requirements are met only if they are included correctly in the exported file.

For further information on using files, please see Opening Files **(on page 42)**, Importing Files (on page 43), and Saving Files (on page 56).

Character Studio BVH File Format

The Character Studio BVH motion capture file format is an ASCII file that is used to import rotational joint data from various motion capture systems into Character Studio to animate bipedal characters.

These files are divided into two major sections: Hierarchy and Motion. The Hierarchy section describes the joint-to-joint connections and offsets for the sampled motion data, and the Motion section describes the movement of these individual joints on a per-sample basis.

Note: For further information, please see the Character Studio User Reference.

Interface

Switch axes—Switches the Y axis with the Z axis. This is helpful when motion displays sideways.

Restriction type—Used to establish the type of restriction used when exporting.

- **Unrestricted**—Does not enforce Character Studio restrictions. Exported skeleton files are not able to be read by Character Studio if you select this option. However, they can be read by all full-specification .bvh readers.
- **Allow position animation on root only**—Prevents any positional movement in .bvh skeletons. This movement does not occur naturally in human skeletons; however, it is produced in rare instances when creating bones in Deep Exploration. This option is helpful in maintaining the integrity of .bvh skeletons. Note that in some situations you may want to keep positional movement. For example, if a sword or other prop is linked to a hand.
- **Enforce Character Studio BVH format restrictions**—Used to enforce Character Studio restrictions. This allows exported skeleton files to be read by Character Studio.

Restrictions—Used to establish skeletal and bone settings for exported files.

- **Extra chest**— Exports skeletons with an extra 'chest' segment if the current skeleton has more than one chest segment. Note that if the current skeleton has only one chest segment, a zero length 'chest2' bone is created and exported using this option.
- **Head**—Uses the bone further down the chain determined by the selected offset as the start of the 'head' chain of bones for the exported file.

- **Right hand**—Uses the bone further down the chain, determined by the selected offset, as the start of the 'right hand' chain of bones for the exported file.
- **Left hand**—Uses the bone further down the chain, determined by the selected offset, as the start of the 'left hand' chain of bones for the exported file.
- **Right foot**—Uses the bone further down the chain, determined by the selected offset, as the start of the 'right foot' chain of bones for the exported file.
- **Left foot**—Uses the bone further down the chain, determined by the selected offset, as the start of the 'left foot' chain of bones for the exported file.

Copyright © Right Hemisphere 2006. All Rights Reserved.

BioVision Hierarchical Data and Character Studio Sub-Format Import (.bvh)

You can import and view BioVision Hierarchical Data (.bvh) files and Character Studio Sub-format (.bvh) files.

The BVH file format was originally developed by Biovision, a motion capture services company. It provides skeleton hierarchy information in addition to the motion capture data information. You can enforce Character Studio restrictions when exporting to the .bvh file format, allowing exported skeleton files to be read by Character Studio.

The Character Studio BVH motion capture file format is an ASCII file that is used to import rotational joint data from various motion capture systems into Character Studio to animate bipedal characters. These files are divided into two major sections: Hierarchy and Motion. The Hierarchy section describes the joint-to-joint connections and offsets for the sampled motion data, and the Motion section describes the movement of these individual joints on a per-sample basis.

For further information on using files, please see Opening Files **(on page 42)**, Importing Files (on page 43), and Saving Files (on page 56).

Character Studio BVH File Format

The Character Studio BVH motion capture file format is an ASCII file that is used to import rotational joint data from various motion capture systems into Character Studio to animate bipedal characters.

These files are divided into two major sections: Hierarchy and Motion. The Hierarchy section describes the joint-to-joint connections and offsets for the sampled motion data, and the Motion section describes the movement of these individual joints on a per-sample basis.

Note: For further information, please see the Character Studio User Reference.

Interface

Switch axes—Switches the Y axis with the Z axis. This is helpful when motion displays sideways.

Get base pose only—Imports the setup pose only. Usually this is with the character standing with hands on the hips, and elbows and legs turned outwards (akimbo), or in more of a cruciform pose (shaped like a cross).

Character Studio Export (.csm)

You can save files to the BioVision Hierarchical Data (.bvh) format. You can also enforce Character Studio restrictions that allow .bvh files to be read by Character Studio.

The CSM format is an optical tracker format that is used by Discreet's 3ds max Character Studio for importing marker data.

For CSM files to be compatible with Character Studio, they must use names that match the Character Studio setup and they must have an appropriate number of markers in the specified locations on the actor. The CSM format itself is capable of holding any kind of marker data, but being in the CSM format it is assumed that it also adheres to the name and marker configuration required by Character Studio.

For further information on using files, please see Opening Files **(on page 42)**, Importing Files (on page 43), and Saving Files (on page 56).

Interface

Switch axes—Switches the Y axis with the Z axis. This is helpful when motion displays sideways.

Copyright © Right Hemisphere 2006. All Rights Reserved.

Character Studio Import (.csm)

You can import and view Character Studio (.csm) files.

The CSM format is an optical tracker format that is used by Discreet's 3ds max Character Studio for importing marker data.

For CSM files to be compatible with Character Studio, they must use names that match the Character Studio setup and they must have an appropriate number of markers in the specified locations on the actor. The CSM format itself is capable of holding any kind of marker data, but being in the CSM format it is assumed that it also adheres to the name and marker configuration required by Character Studio.

For further information on using files, please see Opening Files **(on page 42)**, Importing Files (on page 43), and Saving Files (on page 56).

Interface

Switch axes—Switches the Y axis with the Z axis. This is helpful when motion displays sideways.

Approximate values—Uses approximate values to import the file. All figures to the right of the decimal point in every value relating to the imported file are ignored if this setting is selected, resulting in quicker browsing with lower precision. For example, a value of 0.76 becomes 0 after using this setting.

Note: If you export files after using this setting, without reloading using the original file values, the resulting exported file may have a significant loss in precision.

Coordinate 3D Import (.c3d)

You can import and view Coordinate 3D (.c3d) files.

The C3D format stores 3D coordinate and analog data. All 3D coordinate and numeric data for any recorded measurement is stored in a single file, together with the various parameters that describe the data.

For further information on using files, please see Opening Files **(on page 42)**, Importing Files (on page 43), and Saving Files (on page 56).

Interface

Switch axes—Switches the Y axis with the Z axis. This is helpful when motion displays sideways.

Approximate values—Uses approximate values to import the file. All figures to the right of the decimal point in every value relating to the imported file are ignored if this setting is selected, resulting in quicker browsing with lower precision. For example, a value of 0.76 becomes 0 after using this setting.

Note: If you export files after using this setting, without reloading using the original file values, the resulting exported file may have a significant loss in precision.

Copyright © Right Hemisphere 2006. All Rights Reserved.

Hierarchical Translations and Rotations Import (.htr)

You can import and view Hierarchical Translations and Rotations (.htr) files.

The Hierarchical Translations and Rotations file format was developed as the native skeleton format for the Motion Analysis skeleton generating software and is used for motion analysis.

For further information on using files, please see Opening Files **(on page 42)**, Importing Files (on page 43), and Saving Files (on page 56).

Interface

Switch axes—Switches the Y axis with the Z axis. This is helpful when motion displays sideways.

Get base pose only—Imports the setup pose only. Usually this is with the character standing with hands on the hips, and elbows and legs turned outwards (akimbo), or in more of a cruciform pose (shaped like a cross).

Tracked Row Binary Import (.trb)

You can import and view Tracked Row Binary (.trb) files.

The TRB file format was created by Motion Analysis.

For further information on using files, please see Opening Files **(on page 42)**, Importing Files (on page 43), and Saving Files (on page 56).

Interface

Switch axes—Switches the Y axis with the Z axis. This is helpful when motion displays sideways.

Approximate values—Uses approximate values to import the file. All figures to the right of the decimal point in every value relating to the imported file are ignored if this setting is selected, resulting in quicker browsing with lower precision. For example, a value of 0.76 becomes 0 after using this setting.

Note: If you export files after using this setting, without reloading using the original file values, the resulting exported file may have a significant loss in precision.

Copyright © Right Hemisphere 2006. All Rights Reserved.

Tracked Row Character Export (.trc)

You can save files to the Tracked Row Character (.trc) format.

For further information on using files, please see Opening Files **(on page 42)**, Importing Files (on page 43), and Saving Files (on page 56).

Interface

Switch axes—Switches the Y axis with the Z axis. This is helpful when motion displays sideways.

Tracked Row Character Import (.trc)

You can import and view Tracked Row Character (.trc) files.

For further information on using files, please see Opening Files **(on page 42)**, Importing Files (on page 43), and Saving Files (on page 56).

Interface

Switch axes—Switches the Y axis with the Z axis. This is helpful when motion displays sideways.

Approximate values—Uses approximate values to import the file. All figures to the right of the decimal point in every value relating to the imported file are ignored if this setting is selected, resulting in quicker browsing with lower precision. For example, a value of 0.76 becomes 0 after using this setting.

Note: If you export files after using this setting, without reloading using the original file values, the resulting exported file may have a significant loss in precision.

Copyright © Right Hemisphere 2006. All Rights Reserved.

Appendix F: Material File Formats

The following material file formats are supported by Deep Exploration CAD and Standard Editions and Deep Server. This list is organized alphabetically by file format.

File Format	Type	Extension	View/ Import	Export	Version/Notes
Autodesk 3D Studio Material	Material	MLI	Yes (on page 519)		
Right Hemisphere Material	Material	RHM	Yes (on page 520)	Yes (on page 521)	
Wavefront Material	Material	MTL	Yes (on page 522)		

Autodesk 3D Studio Material (.mli)

You can view Autodesk 3D Studio Material (.mli) files.

The .mli file format is used in the 3ds Studio Application developed by Autodesk to represent materials that are referenced in .max model files. MLI files contain Material-Library data.

For further information on using files, please see Opening Files **(on page 42)**, Importing Files (on page 43), and Saving Files (on page 56).

Copyright © Right Hemisphere 2006. All Rights Reserved.

Right Hemisphere Material (.rhm)

You can view Right Hemisphere Material (.rhm) files.

The .rhm file format was created by Right Hemisphere.

See also Opening Files **(on page 42)**, Importing Files (on page 43), and Saving Files (on page 56).

Right Hemisphere Material Export (.rhm)

You can save files to the Right Hemisphere Material file (.rhm) format.

The .rhm file format was created by Right Hemisphere. Using it you can save the materials that belong to a scene to a separate material file. You can also choose to save the default material, compress the exported file, apply protection, and create thumbnails of varying sizes.

For further information on using files, please see Opening Files **(on page 42)**, Importing Files (on page 43), and Saving Files (on page 56).

Interface

Compression—Reduces the model's file size while maintaining the quality. Compression helps to reduce the amount of storage and transmission bandwidth required for 3D models.

File protection—Protects the exported file. Once the file is protected, you cannot save the file as anything other than an .rhm file format.

Export default material—Saves the default material in the file.

Thumbnail—Creates the specified size thumbnail image of the current model. The thumbnail image displays any setting that have been applied to the model. The thumbnail is displayed in Microsoft's Windows Explorer program (with Thumbnail view turned on). Alternately you can select to not create a thumbnail image.

- **No thumbnail**—Does not create a thumbnail.
- **[size]**—Used to select the width and height of the thumbnail, in pixels.

Copyright © Right Hemisphere 2006. All Rights Reserved.

Wavefront Material (.mtl)

You can view Wavefront Material (.mtl) files.

The .mtl file format was created by Alias/Wavefront to represent materials that are referenced in .obj model files (on page 491). They are in the ASCII format.

Comments begin with a '#' character in column 1. Blank lines may be inserted for clarity. Otherwise, the file consists of a sequence of 'newmtl' statements, followed by a definition of various properties for that material.

For further information on using files, please see Opening Files **(on page 42)**, Importing Files (on page 43), and Saving Files (on page 56).

Appendix G: Shader File Formats

The following shader file formats are supported by Deep Exploration CAD and Standard Editions and Deep Server. This list is organized alphabetically by file format.

File Format	Type	Extension	View/ Import	Export	Version/Notes
Real-Time Shader	Shader	FX	Yes (on page 524)		
Right Hemisphere Shader	Shader	RHS	Yes (on page 525)		

Copyright © Right Hemisphere 2006. All Rights Reserved.

Real-Time Shader (.fx)

You can view Real-Time Shader (.fx) files.

The .fx format is a real-time shader (on page 161): a program used to determine the final surface properties of an object. For example, color, reflectivity, and translucency of a surface.

For further information on using files, please see Opening Files **(on page 42)**, Importing Files (on page 43), and Saving Files (on page 56).

Right Hemipshere Shader (.rhs)

You can view Right Hemisphere Shader (.rhs) files.

The .rhs format is a real-time shader (on page 161): a program used to determine the final surface properties of an object. For example, color, reflectivity, and translucency of a surface.

For further information on using files, please see Opening Files **(on page 42)**, Importing Files (on page 43), and Saving Files (on page 56).

Copyright © Right Hemisphere 2006. All Rights Reserved.

Appendix H: CAD File Formats

The following CAD file formats are supported by Deep Exploration CAD Edition and Deep Server. This list is organized alphabetically by file format.

File Format	Type	Extension	View/ Import	Export	Version/Notes
AutoCAD Drawing Interchange	Scene	DXF	Yes (on page 529)	Yes (on page 528)	Versions 12, 13, 14, 2000-2006.
AutoCAD Drawing Object	Scene	DWG	Yes (on page 530)		Versions 12, 13, 14, 2000-2006.
Autodesk Inventor Assembly	Scene	IAM	Yes (on page 532)		Version 9 and earlier.
Autodesk Inventor Part	Scene	IPT	Yes (on page 534)		Version 9 and earlier.
CADKEY Advanced Design Language	Scene	CDL	Yes (on page 536)		CADL versions 4 - 20.
CATIA	Scene	CGR, DLV, MODEL	Yes (on page 539, on page 537)		CATIA versions 3.x and 4.x.
CATIA5	Scene	CATPART, CATPRODUCT	Yes (on page 544, on page 542)		CATIA versions 5.x up to R15.
Computer Graphics Metafile	Scene	CGM	Yes (on page 548)	Yes (on page 547)*	CGM = CALS profile specified in MIL-D-28003A. *Export: Version 3.0.
Granite File	Scene	G	Yes (on page 549)		WildfireII.
Hewlett-Packard Graphics Library	Scene	PLT	Yes (on page 552)		HPGL 1 and HPGL 2.
IGES Files	Scene	IGES, IGS	Yes (on page 555, on page 553)		Method A: Version 5.1, 5.2, and 5.3. Legacy: Version 5.1.
IronCAD 3D CAD	Scene	ICS	Yes (on page 559)		Optional download with purchase of the Pro/E Module.
JT File	Scene	JT	Yes (on page 563, on page		Method A: Versions 7.0 and earlier.
Lattice XVL Structure and Geometry	Scene	XV0, XV3	Yes (on page 567, on page 566)		Version 3.
MicroStation CAD Graphic	Scene	DGN	Yes (on page 569)		Versions 95, SE, J, 7, and 8.
Neutral Part File	Scene	NEU	Yes (on page 573, on page 571)		Versions 14 - Wildfire.
Parasolid CAD File	Scene	X_B, X_T, XMT, XMT_TXT	Yes (on page 578, on page 576)		Method A: Versions 16 and earlier. Legacy: Versions 3 - 14.
Pro/ENGINEER Assembly	Scene	ASM, XAS	Yes (on page 584, on page 582)		Versions 18, 19, 20, 2000i, 2001, Wildfire, and WildfireII.

Pro/ENGINEER Part	Scene	PRT, XPR	Yes (on page 590, on page 588)		Versions 18, 19, 20, 2000i, 2001, Wildfire, and WildfireII.
PTC Pro/DESKTOP	Scene	DES	Yes (on page 593)		Version 7.0 and above. Optional download with purchase of the Pro/E Module.
Raindrop Geomagic 3D Modelling	Scene	WRP	Yes (on page 595)		Versions 5 and above. Optional download with purchase of the Pro/E Module.
SDRC I-DEAS Model	Scene	ARC, MF1	Yes (on page		Versions 2.x, 6.x - 11.x.
SDRC I-DEAS Package	Scene	PKG	Yes (on page		Versions 2.x, 6.x - 11.x.
SDRC I-DEAS	Scene	UNV	Yes (on page		Versions 2.x, 6.x - 11.x.
SolidEdge 3D CAD Model Part	Scene	PAR	Yes (on page 603)		
SolidWorks Part and Assembly Files	Scene	SLDASM, SLDLFP, SLDPRT	Yes (on page 605)		Method A: Versions 97 - 2005. Legacy: Versions 97 - 2006.
Standard ACIS Text File	Scene	SAT	Yes (on page 609, on page 607)		ACIS release 13 and earlier.
STEP Files	Scene	STEP, STP	Yes (on page 614, on page 612)		AP204 and AP214.
Stereolithography File	Scene	STL	Yes (on page 617)	Yes (on page 618)	
Unigraphics Parts and Assemblies	Scene	PRT	Yes (on page 621, on page 619)		Method A: Releases 13-18, NX 1, and NX 2. Legacy: Releases 13-18, NX 1, NX 2, and NX3.
VDA File	Scene	VDA	Yes (on page 624)		Version 2.0 and earlier.
Wavefront Studio Wireframe	Scene	WIRE	Yes (on page 627)		Version 10. Optional download with purchase of the Pro/E Module.
Windows Metafile	Scene	WMF	Yes (on page 629)		

Copyright © Right Hemisphere 2006. All Rights Reserved.

AutoCAD Drawing Interchange Export (.dxf)

You can save files to the AutoCAD Drawing Interchange (.dxf) format.

The .dxf file format enables the interchange of drawings between AutoCAD and other programs. They can be in either ASCII or binary format, both of which contain a complete description of the AutoCAD drawing. DXF files contain a number of entities such as curves, lines, solids, polygons etc. These are read from within the file and are then created as objects.

For further information on using files, please see Opening Files **(on page 42)**, Importing Files (on page 43), and Saving Files (on page 56).

Support

- Each object is saved as a separate block.
- Materials are converted to layers.
- Diffuse material color is used as layer color number.
- The default 'INSERT' is used to represent hierarchical information in scene.

Interface

Common—Used to establish the common settings.

- **Export by layer**—Used to establish how to export the layer settings.
  - **Layer by object**—Saves each object in separate layers.
  - **Layer by material**—Saves all objects that use the same material into a single layer.

AutoCAD Drawing Interchange Import (.dxf)

You can import and view AutoCAD Drawing Interchange (.dxf) files.

The .dxf file format enables the interchange of drawings between AutoCAD and other programs. They can be in either ASCII or binary format, both of which contain a complete description of the AutoCAD drawing. DXF files contain a number of entities such as curves, lines, solids, polygons etc. These are read from within the file and are then created as objects.

For further information on using files, please see Opening Files **(on page 42)**, Importing Files (on page 43), and Saving Files (on page 56).

Support

- ASCII and binary format.
- Dimensions are imported as 3D polylines.
- Layer names can be seen in the Scene tree.
- Data is read as meshes or 3D polylines.
- Layout information is imported if any is present in the file.
- Models that have 256 color.
- Models that have materials with values such as specular, reflection, and opacity.
- Materials can be either attached to entities or attached to layers. For example, if a material called WOOD is attached to entity A, then entity A has the WOOD material. Or, if the WOOD material is attached to Layer 1, then all the entities under Layer 1 have that WOOD material.

Interface

Common—Used to establish the common settings.

- **Layout**—Used to establish which layouts to import.
  - **Import active layout**—Imports only the active layout within the selected file.
  - **Import all layouts**—Imports all the layouts within the selected file.
  - **Import Model-Space layout**—Imports only the Model-Space layout within the selected file.

Geometry Transform (on page 44)—Used to transform (rotate, position, and scale) the scene along the X, Y, and Z axes.

- **Rotation**—Used to set the degrees of rotation around each axis from 0 to 360 degrees. The rotation values can be entered with up to 6 decimal places.
  - **X**—Rotates the scene along the X axis.
  - **Y**—Rotates the scene along the Y axis.
  - **Z**—Rotates the scene along the Z axis.
- **Position**—Used to set the position of the scene along the X, Y, and Z axes.
  - **X**—Positions the scene along the X axis.
  - **Y**—Positions the scene along the Y axis.
  - **Z**—Positions the scene along the Z axis.
- **Scale**—Used to scale the object along the X, Y, and Z axes.
  - **X**—Scales the scene along the X axis.
  - **Y**—Scales the scene along the Y axis.
  - **Z**—Scales the scene along the Z axis.

Copyright © Right Hemisphere 2006. All Rights Reserved.

AutoCAD Drawing Object Import (.dwg)

You can import and view AutoCAD Drawing Object (.dwg) files.

The .dwg file format can be in either ASCII or binary format, both of which contain a complete description of the AutoCAD drawing. DWG files contain a number of entities such as curves, lines, solids, and polygons. These are read from within the file and are then created as objects.

For further information on using files, please see Opening Files **(on page 42)**, Importing Files (on page 43), and Saving Files (on page 56).

Support

- 2D vector data.
- ASCII and binary format.
- Assembly hierarchy.
- Dimensions are imported as 3D polylines.
- Layer names can be seen in the Scene tree.
- Data is read as meshes or 3D polylines.
- Layout information is imported if any is present in the file.
- Meshes.
- Models that have 256 color.
- Models that have materials with values such as specular, reflection, and opacity.
- Materials can be either attached to entities or attached to layers. For example, if a material called WOOD is attached to entity A, then entity A has the WOOD material. Or, if the WOOD material is attached to Layer 1, then all the entities under Layer 1 have that WOOD material.
- Parts data.
- Solids are imported as meshes.

Limitations

- Animation.
- BOM support based on part names.
- Configurations.
- NURBS/Solids.
- Tessellation control.
- Textures.
- UV coordinates.

Interface

Common—Used to establish the common settings.

- **Layout**—Used to establish which layouts to import.
  - **Import active layout**—Imports only the active layout within the selected file.
  - **Import all layouts**—Imports all the layouts within the selected file.
  - **Import Model-Space layout**—Imports only the Model-Space layout within the selected file.

Geometry Transform (on page 44)—Used to transform (rotate, position, and scale) the scene along the X, Y, and Z axes.

- **Rotation**—Used to set the degrees of rotation around each axis from 0 to 360 degrees. The rotation values can be entered with up to 6 decimal places.
  - **X**—Rotates the scene along the X axis.
  - **Y**—Rotates the scene along the Y axis.
  - **Z**—Rotates the scene along the Z axis.
- **Position**—Used to set the position of the scene along the X, Y, and Z axes.
  - **X**—Positions the scene along the X axis.
  - **Y**—Positions the scene along the Y axis.
  - **Z**—Positions the scene along the Z axis.
- **Scale**—Used to scale the object along the X, Y, and Z axes.
  - **X**—Scales the scene along the X axis.
  - **Y**—Scales the scene along the Y axis.
  - **Z**—Scales the scene along the Z axis.

Copyright © Right Hemisphere 2006. All Rights Reserved.

Autodesk Inventor Assembly Import (.iam)

You can import and view Autodesk Inventor Assembly (.iam) files.

For further information on using files, please see Opening Files **(on page 42)**, Importing Files (on page 43), and Saving Files (on page 56).

Support

- Assembly hierarchy.
- Meshes.
- Parts data.
- Material and object names.

Limitations

- 2D vector data.
- Animation.
- BOM support based on part names.
- Configurations.
- Solids/NURBS.
- Textures.
- UV coordinates.

Interface

Tessellation (on page 45)—Used to establish the tessellation (arrangement and density of the polygons) settings. Note that if you enter 0 (zero) for any of the tessellation settings, they are not taken into effect during the tessellation process.

- **Import with existing surface deviation**—Imports the file using the file's surface deviation values. Otherwise, the file is imported with the value specified in the 'Surface deviation' option.
- **Surface deviation** (on page 45)—Determines the maximum distance allowed between original analytical surface and its tessellated representation. Triangle edges do not deviate from edges of the face by more than this amount. The units are expressed as unit size based on those used by the model. A smaller surface deviation produces more triangles for smoother models.

Geometry Transform (on page 44)—Used to transform (rotate, position, and scale) the scene along the X, Y, and Z axes.

- **Rotation**—Used to set the degrees of rotation around each axis from 0 to 360 degrees. The rotation values can be entered with up to 6 decimal places.
  - **X**—Rotates the scene along the X axis.
  - **Y**—Rotates the scene along the Y axis.
  - **Z**—Rotates the scene along the Z axis.
- **Position**—Used to set the position of the scene along the X, Y, and Z axes.
  - **X**—Positions the scene along the X axis.
  - **Y**—Positions the scene along the Y axis.
  - **Z**—Positions the scene along the Z axis.
- **Scale**—Used to scale the object along the X, Y, and Z axes.
  - **X**—Scales the scene along the X axis.

- **Y**—Scales the scene along the Y axis.
- **Z**—Scales the scene along the Z axis.

Copyright © Right Hemisphere 2006. All Rights Reserved.

Autodesk Inventor Part Import (.ipt)

You can import and view Autodesk Inventor Part (.ipt) files.

For further information on using files, please see Opening Files **(on page 42)**, Importing Files (on page 43), and Saving Files (on page 56).

Support

- Assembly hierarchy.
- Meshes.
- Parts data.
- Material and object names.

Limitations

- 2D vector data.
- Animation.
- BOM support based on part names.
- Configurations.
- Solids/NURBS.
- Textures.
- UV coordinates.

Interface

Tessellation (on page 45)—Used to establish the tessellation (arrangement and density of the polygons) settings. Note that if you enter 0 (zero) for any of the tessellation settings, they are not taken into effect during the tessellation process.

- **Import with existing surface deviation**—Imports the file using the file's surface deviation values. Otherwise, the file is imported with the value specified in the 'Surface deviation' option.
- **Surface deviation** (on page 45)—Determines the maximum distance allowed between original analytical surface and its tessellated representation. Triangle edges do not deviate from edges of the face by more than this amount. The units are expressed as unit size based on those used by the model. A smaller surface deviation produces more triangles for smoother models.

Geometry Transform (on page 44)—Used to transform (rotate, position, and scale) the scene along the X, Y, and Z axes.

- **Rotation**—Used to set the degrees of rotation around each axis from 0 to 360 degrees. The rotation values can be entered with up to 6 decimal places.
  - **X**—Rotates the scene along the X axis.
  - **Y**—Rotates the scene along the Y axis.
  - **Z**—Rotates the scene along the Z axis.
- **Position**—Used to set the position of the scene along the X, Y, and Z axes.
  - **X**—Positions the scene along the X axis.
  - **Y**—Positions the scene along the Y axis.
  - **Z**—Positions the scene along the Z axis.
- **Scale**—Used to scale the object along the X, Y, and Z axes.
  - **X**—Scales the scene along the X axis.

- **Y**—Scales the scene along the Y axis.
- **Z**—Scales the scene along the Z axis.

Copyright © Right Hemisphere 2006. All Rights Reserved.

CADKEY Advanced Design Language Import (.cdl)

You can import and view CADKEY Advanced Design Language (.cdl) file.

For further information on using files, please see Opening Files **(on page 42)**, Importing Files (on page 43), and Saving Files (on page 56).

Support

- Assembly hierarchy.
- Meshes.
- Parts data.
- Material and object names.

Limitations

- 2D vector data.
- Animation.
- BOM support based on part names.
- Configurations.
- Solids/NURBS.
- Tessellation control.
- Textures.
- UV coordinates.

Interface

Geometry Transform (on page 44)—Used to transform (rotate, position, and scale) the scene along the X, Y, and Z axes.

- **Rotation**—Used to set the degrees of rotation around each axis from 0 to 360 degrees. The rotation values can be entered with up to 6 decimal places.
  - **X**—Rotates the scene along the X axis.
  - **Y**—Rotates the scene along the Y axis.
  - **Z**—Rotates the scene along the Z axis.
- **Position**—Used to set the position of the scene along the X, Y, and Z axes.
  - **X**—Positions the scene along the X axis.
  - **Y**—Positions the scene along the Y axis.
  - **Z**—Positions the scene along the Z axis.
- **Scale**—Used to scale the object along the X, Y, and Z axes.
- **X**—Scales the scene along the X axis.

CATIA Import (.cgr, .dlv, .model)

You can import and view CATIA 4 (.cgr, .dlv, .model) files.

CATIA is the file format used in the CAD applications developed by Dassault Systems and is one of the most popular CAD applications.

The import options differ depending on the version of Deep Exploration you have installed:

- Certain options are available with the CAD Edition of Deep Exploration.
- Certain options are available with the Standard Edition of Deep Exploration and the CATIA Module.

Note that support for the CAD format versions (on page 526) also differs depending on the version of Deep Exploration you have installed.

CATIA CAD Edition Import

You can import and view CATIA 4 (.cgr, .dlv, .model) files using the import options delivered with the CAD Edition of Deep Exploration.

For further information on using files, please see Opening Files **(on page 42)**, Importing Files (on page 43), and Saving Files (on page 56).

Support

- 2D vector data.
- Materials and object names.
- Meshes.
- Parts data.
- Tessellation control.

Limitations

- Animation.
- Assembly hierarchy.
- BOM support based on part names.
- Configurations.
- NURBS/Solids.
- Textures.
- UV coordinates.

Textures.Interface

Common—Used to establish the common settings including tessellation (arrangement and density of the polygons) settings. Note that if you enter 0 (zero) for any of the tessellation settings, they are not taken into effect during the tessellation process.

- **Surface deviation** (on page 45)—Determines the maximum distance allowed between original analytical surface and its tessellated representation. Triangle edges do not deviate from edges of the face by more than this amount. The units are expressed as unit size based on those used by the model. A smaller surface deviation produces more triangles for smoother models.

Copyright © Right Hemisphere 2006. All Rights Reserved.

- **Normal deviation** (on page 45)—Determines the maximum angular deviation (in degrees) allowed between a analytical surface and its triangulation. Pairs of triangles do not incorporate a dihedral angle greater than this amount. For example, this setting dictates the minimum number of facets around a smaller circle or cylinder regardless of the Surface Deviation setting. This parameter gives you added control over faces with very small radii. Lower values result in finer tessellations, while higher values give coarser tessellations.
- **Import hidden objects**—Imports all hidden objects. If, after importing a file, you modify any visible objects that contain hidden sub-objects after import, those hidden objects are also modified.
- **Display hidden objects**—Displays all hidden objects in the viewport after importing the file.
- **Import sheet bodies**—Imports all construction geometry. Sheet bodies are flat surfaces from which each object is cut.

  Note: If a file contains sheet bodies, this option must be selected for the file to be imported correctly.

- **Import wireframes**—Imports all wireframes if any exist.
- **Unit**—Used to select the unit type for which you want to view its custom unit (scene unit) measurement in meters. For example, 1 custom unit = 0.01 meters.
  - **File default**—Imports the file using the file's units.
  - **Millimeters**—Imports the file in millimeters (mm).
  - **Centimeters**—Imports the file in centimeters (cm).
  - **Meters**—Imports the file in meters (m).
  - **Inches**—Imports the file in inches (in).
  - **Feet**—Imports the file in feet (ft).
- **Ignore material opacity**—Disregards any material transparency that may have been set in the original file via an external application. That is, all the objects appear opaque. For example, a material opacity of 30% for an object is ignored, and the object is displayed with 100% opacity.
- **Auto-correct view orientation**—Attempts to correct the file's original view orientation to align with Deep Exploration's view orientation.
- **Import PMI** (on page 194)—Displays the Product Manufacturing Information (PMI) in the 3D Objects list and creates a camera for every model view found within the file. The cameras are created in a Model View folder for each object that has a model view. You can view the scene through one of these cameras.

Geometry Transform (on page 44)—Used to transform (rotate, position, and scale) the scene along the X, Y, and Z axes.

- **Rotation**—Used to set the degrees of rotation around each axis from 0 to 360 degrees. The rotation values can be entered with up to 6 decimal places.
  - **X**—Rotates the scene along the X axis.
  - **Y**—Rotates the scene along the Y axis.
  - **Z**—Rotates the scene along the Z axis.
- **Position**—Used to set the position of the scene along the X, Y, and Z axes.
  - **X**—Positions the scene along the X axis.
  - **Y**—Positions the scene along the Y axis.
  - **Z**—Positions the scene along the Z axis.
- **Scale**—Used to scale the object along the X, Y, and Z axes.
  - **X**—Scales the scene along the X axis.
  - **Y**—Scales the scene along the Y axis.
  - **Z**—Scales the scene along the Z axis.

CATIA Model Import (.cgr, .dlv, .model)

You can import and view CATIA 4 (.cgr, .dlv, .model) files.

CATIA is the file format used in the CAD applications developed by Dassault Systems and is one of the most popular CAD applications.

For further information on using files, please see Opening Files **(on page 42)**, Importing Files (on page 43), and Saving Files (on page 56).

Support

- 2D vector data is supported when importing using Method A.
- Materials and object names.
- Meshes.
- Parts data.
- Tessellation control.
- UV coordinates are supported when importing using the Legacy method.

Limitations

- 2D vector data is not supported when importing using the Legacy method.
- Animation.
- Assembly hierarchy.
- BOM support based on part names.
- Configurations.
- NURBS/Solids data.
- Textures.
- UV coordinates are not supported when importing using Method A.

Interface

Common—Used to establish the common settings including tessellation (arrangement and density of the polygons) settings. Note that if you enter 0 (zero) for any of the tessellation settings, they are not taken into effect during the tessellation process.

- **Surface deviation** (on page 45)—Determines the maximum distance allowed between original analytical surface and its tessellated representation. Triangle edges do not deviate from edges of the face by more than this amount. The units are expressed as unit size based on those used by the model. A smaller surface deviation produces more triangles for smoother models.
- **Normal deviation** (on page 45)—Determines the maximum angular deviation (in degrees) allowed between a analytical surface and its triangulation. Pairs of triangles do not incorporate a dihedral angle greater than this amount. For example, this setting dictates the minimum number of facets around a smaller circle or cylinder regardless of the Surface Deviation setting. This parameter gives you added control over faces with very small radii. Lower values result in finer tessellations, while higher values give coarser tessellations.
- **Import sheet bodies**—Imports all construction geometry. Sheet bodies are flat surfaces from which each object is cut.

  Note: If a file contains sheet bodies, this option must be selected for the file to be imported correctly.

Import Method—Used to establish the way in which to import the file.

Copyright © Right Hemisphere 2006. All Rights Reserved.

- **Method**—The method in which the file is imported. Each method utilizes differing import options to import the file.
  - **Method A**—Imports the file using Method A.
  - **Legacy**—Imports the file using the Legacy method.

Method A—Used to establish the Method A settings.

- **Import hidden objects**—Imports all hidden objects. If, after importing a file, you modify any visible objects that contain hidden sub-objects after import, those hidden objects are also modified.
- **Display hidden objects**—Displays all hidden objects in the viewport after importing the file.
- **Import sheet bodies**—Imports all construction geometry. Sheet bodies are flat surfaces from which each object is cut.

Note: If a file contains sheet bodies, this option must be selected for the file to be imported correctly.

- **Import wireframes**—Imports all wireframes if any exist.
- **Unit**—Used to select the unit type for which you want to view its custom unit (scene unit) measurement in meters. For example, 1 custom unit = 0.01 meters.
  - **File default**—Imports the file using the file's units.
  - **Millimeters**—Imports the file in millimeters (mm).
  - **Centimeters**—Imports the file in centimeters (cm).
  - **Meters**—Imports the file in meters (m).
  - **Inches**—Imports the file in inches (in).
  - **Feet**—Imports the file in feet (ft).
- **Ignore material opacity**—Disregards any material transparency that may have been set in the original file via an external application. That is, all the objects appear opaque. For example, a material opacity of 30% for an object is ignored, and the object is displayed with 100% opacity.
- **Auto-correct view orientation**—Attempts to correct the file's original view orientation to align with Deep Exploration's view orientation.
- **Import PMI** (on page 194)—Displays the Product Manufacturing Information (PMI) in the 3D Objects list and creates a camera for every model view found within the file. The cameras are created in a Model View folder for each object that has a model view. You can view the scene through one of these cameras.

Legacy—Used to establish the Legacy settings.

- **Maximum edge length** (on page 45)—Selects the maximum allowed length of each edge, as a percentage the scene bounding box diagonal. This helps to prevent long, narrow polygons being created. For example, if you enter 10%, the length of any edge will be less than 1/10 of diagonal length of object’s bounding box.
- **Grid aspect ratio** (on page 45)—Determines the ratio (between 0 and 1) of the width to height for each 'surface square'. For example, if you enter 1, the tessellation process attempts to produce squares instead of rectangles. This is helpful in avoiding the creation of very long, narrow triangles which can cause undesirable lighting and shading artifacts.
- **Create material for all faces**—Creates and assigns a new material to all the faces. The new materials have the same names as the faces (if face names exist). Otherwise, it uses the objects' names.
- **Merge sub-objects**—Combines all sub-objects into a single part.
- **Heal solid objects**—Welds the edges of all solid objects together.
- **Log file**—Creates an information log file in the same folder as the 3D file. The log includes system information, user-specified settings, a conversion summary, and the result of the import.

Geometry Transform (on page 44)—Used to transform (rotate, position, and scale) the scene along the X, Y, and Z axes.

- **Rotation**—Used to set the degrees of rotation around each axis from 0 to 360 degrees. The rotation values can be entered with up to 6 decimal places.
  - **X**—Rotates the scene along the X axis.
  - **Y**—Rotates the scene along the Y axis.
  - **Z**—Rotates the scene along the Z axis.
- **Position**—Used to set the position of the scene along the X, Y, and Z axes.
  - **X**—Positions the scene along the X axis.
  - **Y**—Positions the scene along the Y axis.
  - **Z**—Positions the scene along the Z axis.
- **Scale**—Used to scale the object along the X, Y, and Z axes.
  - **X**—Scales the scene along the X axis.
  - **Y**—Scales the scene along the Y axis.
  - **Z**—Scales the scene along the Z axis.

Copyright © Right Hemisphere 2006. All Rights Reserved.

CATIA5 Assembly and Part Import (.catpart, .catproduct)

You can import and view CATIA5 assembly and part (.catpart, .catproduct) files.

CATIA5 is the file format used in the CAD applications developed by Dassault Systems and is one of the most popular CAD applications.

The import options differ depending on the version of Deep Exploration you have installed:

- Certain options are available with the CAD Edition of Deep Exploration.
- Certain options are available with the Standard Edition of Deep Exploration and the CATIA5 Module.

Note that support for the CAD format versions (on page 526) also differs depending on the version of Deep Exploration you have installed.

CATIA5 CAD Edition Import

You can import and view CATIA5 (.catpart, .catproduct) files using the import options delivered with the CAD Edition of Deep Exploration.

For further information on using files, please see Opening Files **(on page 42)**, Importing Files (on page 43), and Saving Files (on page 56).

Support

- 2D vector data.
- Materials and object names.
- Meshes.
- Parts data.
- Tessellation control.

Limitations

- Animation.
- Assembly hierarchy.
- BOM support based on part names.
- Configurations.
- NURBS/Solids.
- Textures.
- UV coordinates.

Interface

Common—Used to establish the common settings including tessellation (arrangement and density of the polygons) settings. Note that if you enter 0 (zero) for any of the tessellation settings, they are not taken into effect during the tessellation process.

- **Surface deviation** (on page 45)—Determines the maximum distance allowed between original analytical surface and its tessellated representation. Triangle edges do not deviate from edges of the face by more than this amount. The units are expressed as unit size based on those used by the model. A smaller surface deviation produces more triangles for smoother models.

- **Normal deviation** (on page 45)—Determines the maximum angular deviation (in degrees) allowed between a analytical surface and its triangulation. Pairs of triangles do not incorporate a dihedral angle greater than this amount. For example, this setting dictates the minimum number of facets around a smaller circle or cylinder regardless of the Surface Deviation setting. This parameter gives you added control over faces with very small radii. Lower values result in finer tessellations, while higher values give coarser tessellations.
- **Import hidden objects**—Imports all hidden objects. If, after importing a file, you modify any visible objects that contain hidden sub-objects after import, those hidden objects are also modified.
- **Display hidden objects**—Displays all hidden objects in the viewport after importing the file.
- **Import sheet bodies**—Imports all construction geometry. Sheet bodies are flat surfaces from which each object is cut.

  Note: If a file contains sheet bodies, this option must be selected for the file to be imported correctly.

- **Import wireframes**—Imports all wireframes if any exist.
- **Unit**—Used to select the unit type for which you want to view its custom unit (scene unit) measurement in meters. For example, 1 custom unit = 0.01 meters.
  - **File default**—Imports the file using the file's units.
  - **Millimeters**—Imports the file in millimeters (mm).
  - **Centimeters**—Imports the file in centimeters (cm).
  - **Meters**—Imports the file in meters (m).
  - **Inches**—Imports the file in inches (in).
  - **Feet**—Imports the file in feet (ft).
- **Ignore material opacity**—Disregards any material transparency that may have been set in the original file via an external application. That is, all the objects appear opaque. For example, a material opacity of 30% for an object is ignored, and the object is displayed with 100% opacity.
- **Auto-correct view orientation**—Attempts to correct the file's original view orientation to align with Deep Exploration's view orientation.
- **Import PMI** (on page 194)—Displays the Product Manufacturing Information (PMI) in the 3D Objects list and creates a camera for every model view found within the file. The cameras are created in a Model View folder for each object that has a model view. You can view the scene through one of these cameras.

Geometry Transform (on page 44)—Used to transform (rotate, position, and scale) the scene along the X, Y, and Z axes.

- **Rotation**—Used to set the degrees of rotation around each axis from 0 to 360 degrees. The rotation values can be entered with up to 6 decimal places.
  - **X**—Rotates the scene along the X axis.
  - **Y**—Rotates the scene along the Y axis.
  - **Z**—Rotates the scene along the Z axis.
- **Position**—Used to set the position of the scene along the X, Y, and Z axes.
  - **X**—Positions the scene along the X axis.
  - **Y**—Positions the scene along the Y axis.
  - **Z**—Positions the scene along the Z axis.
- **Scale**—Used to scale the object along the X, Y, and Z axes.
  - **X**—Scales the scene along the X axis.
  - **Y**—Scales the scene along the Y axis.
  - **Z**—Scales the scene along the Z axis.

Copyright © Right Hemisphere 2006. All Rights Reserved.

CATIA5 Assembly and Part Import (.catpart, .catproduct)

You can import and view CATIA5 assembly and part (.catpart, .catproduct) files.

CATIA5 is the file format used in the CAD applications developed by Dassault Systems and is one of the most popular CAD applications.

For further information on using files, please see Opening Files **(on page 42)**, Importing Files (on page 43), and Saving Files (on page 56).

Support

- 2D vector data as wireframes are supported when importing using Method A.
- Materials and object names.
- Meshes.
- Parts data.
- Tessellation control.
- UV coordinates are supported when importing using the Legacy method.

Limitations

- Animation.
- Assembly hierarchy.
- BOM support based on part names.
- Configurations.
- NURBS/Solids data.
- Textures.
- UV coordinates are not supported when importing using Method A.

Interface

Common—Used to establish the common settings including tessellation (arrangement and density of the polygons) settings. Note that if you enter 0 (zero) for any of the tessellation settings, they are not taken into effect during the tessellation process.

- **Surface deviation** (on page 45)—Determines the maximum distance allowed between original analytical surface and its tessellated representation. Triangle edges do not deviate from edges of the face by more than this amount. The units are expressed as unit size based on those used by the model. A smaller surface deviation produces more triangles for smoother models.
- **Normal deviation** (on page 45)—Determines the maximum angular deviation (in degrees) allowed between a analytical surface and its triangulation. Pairs of triangles do not incorporate a dihedral angle greater than this amount. For example, this setting dictates the minimum number of facets around a smaller circle or cylinder regardless of the Surface Deviation setting. This parameter gives you added control over faces with very small radii. Lower values result in finer tessellations, while higher values give coarser tessellations.
- **Import sheet bodies**—Imports all construction geometry. Sheet bodies are flat surfaces from which each object is cut.

  Note: If a file contains sheet bodies, this option must be selected for the file to be imported correctly.

Import Method—Used to establish the way in which to import the file.

- **Method**—The method in which the file is imported. Each method utilizes differing import options to import the file.
  - **Method A**—Imports the file using Method A.
  - **Legacy**—Imports the file using the Legacy method.

Method A—Used to establish the Method A settings.

- **Import hidden objects**—Imports all hidden objects. If, after importing a file, you modify any visible objects that contain hidden sub-objects after import, those hidden objects are also modified.
- **Display hidden objects**—Displays all hidden objects in the viewport after importing the file.
- **Import sheet bodies**—Imports all construction geometry. Sheet bodies are flat surfaces from which each object is cut.

Note: If a file contains sheet bodies, this option must be selected for the file to be imported correctly.

- **Import wireframes**—Imports all wireframes if any exist.
- **Unit**—Used to select the unit type for which you want to view its custom unit (scene unit) measurement in meters. For example, 1 custom unit = 0.01 meters.
  - **File default**—Imports the file using the file's units.
  - **Millimeters**—Imports the file in millimeters (mm).
  - **Centimeters**—Imports the file in centimeters (cm).
  - **Meters**—Imports the file in meters (m).
  - **Inches**—Imports the file in inches (in).
  - **Feet**—Imports the file in feet (ft).
- **Ignore material opacity**—Disregards any material transparency that may have been set in the original file via an external application. That is, all the objects appear opaque. For example, a material opacity of 30% for an object is ignored, and the object is displayed with 100% opacity.
- **Auto-correct view orientation**—Attempts to correct the file's original view orientation to align with Deep Exploration's view orientation.
- **Import PMI** (on page 194)—Displays the Product Manufacturing Information (PMI) in the 3D Objects list and creates a camera for every model view found within the file. The cameras are created in a Model View folder for each object that has a model view. You can view the scene through one of these cameras.

Legacy—Used to establish the Legacy settings.

- **Maximum edge length** (on page 45)—Selects the maximum allowed length of each edge, as a percentage the scene bounding box diagonal. This helps to prevent long, narrow polygons being created. For example, if you enter 10%, the length of any edge will be less than 1/10 of diagonal length of object’s bounding box.
- **Grid aspect ratio** (on page 45)—Determines the ratio (between 0 and 1) of the width to height for each 'surface square'. For example, if you enter 1, the tessellation process attempts to produce squares instead of rectangles. This is helpful in avoiding the creation of very long, narrow triangles which can cause undesirable lighting and shading artifacts.
- **Create material for all faces**—Creates and assigns a new material to all the faces. The new materials have the same names as the faces (if face names exist). Otherwise, it uses the objects' names.
- **Merge sub-objects**—Combines all sub-objects into a single part.
- **Heal solid objects**—Welds the edges of all solid objects together.
- **Log file**—Creates an information log file in the same folder as the 3D file. The log includes system information, user-specified settings, a conversion summary, and the result of the import.

Copyright © Right Hemisphere 2006. All Rights Reserved.

Geometry Transform (on page 44)—Used to transform (rotate, position, and scale) the scene along the X, Y, and Z axes.

- **Rotation**—Used to set the degrees of rotation around each axis from 0 to 360 degrees. The rotation values can be entered with up to 6 decimal places.
  - **X**—Rotates the scene along the X axis.
  - **Y**—Rotates the scene along the Y axis.
  - **Z**—Rotates the scene along the Z axis.
- **Position**—Used to set the position of the scene along the X, Y, and Z axes.
  - **X**—Positions the scene along the X axis.
  - **Y**—Positions the scene along the Y axis.
  - **Z**—Positions the scene along the Z axis.
- **Scale**—Used to scale the object along the X, Y, and Z axes.
  - **X**—Scales the scene along the X axis.
  - **Y**—Scales the scene along the Y axis.
  - **Z**—Scales the scene along the Z axis.

Computer Graphics Metafile Export (.cgm)

You can save files to the Computer Graphics Export (.cgm) format.

The .cgm file format is one of the CALS standard formats for representing 2D technical illustrations and is an object-oriented graphic format. It was developed by experts working under the auspices of ISO and ANSI, and was designed specifically as a common format for the platform-independent interchange of raster (bitmap) and vector data.

It is used primarily to store vector graphics information. CGM files typically contain either vector or raster data, but rarely both. Used in its primary role as a vector format, it offers the advantage of small file size and resolution independence, while not being tied to a specific software package or hardware platform. CGM was adapted by the Department of Defense as one of the CALS initiative standards.

For further information on using files, please see Opening Files **(on page 42)**, Importing Files (on page 43), and Saving Files (on page 56).

Support

- ASCII and binary versions.

Interface

Version—Used to establish with which version to save the file.

- **1 (most compatible)**—Saves the files in version 1 of the .cgm format. This version is the most compatible.
- **3 (best curves)**—Saves the files in version 3 of the .cgm format. This version produces the best curves.

File mode—Used to establish in which format to save the file.

- **Binary**—Saves the file in binary format.
- **Text**—Files the file in text format. Note that this file is larger than the Binary file but you can edit the content in a text editor.

Numeric Precision—Used to establish with what precision to save numbers in the file.

- **Integer**—Saves the numbers as integers.
- **Float**—Saves the numbers as floats.

Copyright © Right Hemisphere 2006. All Rights Reserved.

Computer Graphics Metafile Import (.cgm)

You can import and view Computer Graphics Metafile (.cgm) files.

The .cgm file format is one of the CALS standard formats for representing 2D technical illustrations and is an object-oriented graphic format. It was developed by experts working under the auspices of ISO and ANSI, and was designed specifically as a common format for the platform-independent interchange of raster (bitmap) and vector data.

It is used primarily to store vector graphics information. CGM files typically contain either vector or raster data, but rarely both. Used in its primary role as a vector format, it offers the advantage of small file size and resolution independence, while not being tied to a specific software package or hardware platform. CGM was adapted by the Department of Defense as one of the CALS initiative standards.

For further information on using files, please see Opening Files **(on page 42)**, Importing Files (on page 43), and Saving Files (on page 56).

Support

- ASCII and binary versions.

Limitation

- Bitmaps.

Interface

Common—Used to establish the common settings.

- **Fill**—Used to select the way in which polygons are rendered.
  - **No**—Renders polygons as lines.
  - **Yes**—Renders polygons as solid triangles.

Granite File Import (.g)

You can import and view Granite (.g) files.

For further information on using files, please see Opening Files **(on page 42)**, Importing Files (on page 43), and Saving Files (on page 56).

Support

- 2D vector data.
- Assembly hierarchy.
- Meshes.
- Parts data.
- Material and object names.
- Tessellation control.
- UV coordinates are supported when importing using Method A.

Limitations

- Animation.
- BOM support based on part names.
- Configurations.
- Solids/NURBS.
- Textures.

Interface

Import Method—Used to establish the way in which to import the file.

- **Method**—The method in which the file is imported. Each method utilizes differing import options to import the file.
  - **Method A**—Imports the file using Method A.
  - **Legacy**—Imports the file using the Legacy method.

Method A—Used to establish the Method A settings.

- **Surface deviation** (on page 45)—Determines the maximum distance allowed between original analytical surface and its tessellated representation. Triangle edges do not deviate from edges of the face by more than this amount. The units are expressed as unit size based on those used by the model. A smaller surface deviation produces more triangles for smoother models.
- **Normal deviation** (on page 45)—Determines the maximum angular deviation (in degrees) allowed between a analytical surface and its triangulation. Pairs of triangles do not incorporate a dihedral angle greater than this amount. For example, this setting dictates the minimum number of facets around a smaller circle or cylinder regardless of the Surface Deviation setting. This parameter gives you added control over faces with very small radii. Lower values result in finer tessellations, while higher values give coarser tessellations.
- **Import hidden objects**—Imports all hidden objects. If, after importing a file, you modify any visible objects that contain hidden sub-objects after import, those hidden objects are also modified.
- **Display hidden objects**—Displays all hidden objects in the viewport after importing the file.
- **Import sheet bodies**—Imports all construction geometry. Sheet bodies are flat surfaces from which each object is cut.

Note: If a file contains sheet bodies, this option must be selected for the file to be imported correctly.

Copyright © Right Hemisphere 2006. All Rights Reserved.

- **Import wireframes**—Imports all wireframes if any exist.
- **Unit**—Used to select the unit type for which you want to view its custom unit (scene unit) measurement in meters. For example, 1 custom unit = 0.01 meters.
  - **File default**—Imports the file using the file's units.
  - **Millimeters**—Imports the file in millimeters (mm).
  - **Centimeters**—Imports the file in centimeters (cm).
  - **Meters**—Imports the file in meters (m).
  - **Inches**—Imports the file in inches (in).
  - **Feet**—Imports the file in feet (ft).
- **Ignore material opacity**—Disregards any material transparency that may have been set in the original file via an external application. That is, all the objects appear opaque. For example, a material opacity of 30% for an object is ignored, and the object is displayed with 100% opacity.
- **Auto-correct view orientation**—Attempts to correct the file's original view orientation to align with Deep Exploration's view orientation.
- **Import PMI** (on page 194)—Displays the Product Manufacturing Information (PMI) in the 3D Objects list and creates a camera for every model view found within the file. The cameras are created in a Model View folder for each object that has a model view. You can view the scene through one of these cameras.

Legacy—Used to establish the Legacy settings.

- **Default Tessellation** (on page 45)—Used to import the file using the default tessellation settings (arrangement and density of the polygons).

  Note: If you enter 0 (zero) for any of the tessellation settings, they are not taken into effect during the tessellation process.

  - **Tessellation**—Used to import the file using the level of tessellation.
    - **Very high**—Displays a very high resolution using the values directly from the file. You are able to set custom values to give you a higher tessellation if a file has a very high polygon count. Note that using this option reduces processing speed.
    - **High**—Displays a high resolution with a high number of polygons. That is, the planer tolerance is set to the tessellation tolerance.
    - **Medium**—Displays a medium resolution with a medium number of polygons. That is, the planer tolerance is set to the tessellation tolerance and both are multiplied by 10.
    - **Low**—Displays a low resolution with a low number of polygons. That is, the planer tolerance is set to the tessellation tolerance and both are multiplied by 100. This option increases processing speed.
- **Custom Tessellation** (on page 45)—Used to customize the tessellation settings for all objects within the model. These settings are used when you triangulate (mesh) the faces/bodies of the model.

  Note: If you enter 0 (zero) for any of the tessellation settings, they are not taken into effect during the tessellation process.

  - **Angle tolerance**—The maximum angular deviation allowed between a face and its triangulation. Pairs of triangles do not incorporate a dihedral angle greater than this amount. This parameter gives a user added control over faces with very small radii. Lower values result in finer tessellations, while higher values give coarser tessellations.
  - **Planar tolerance**—The maximum distance allowed between a face and its triangulation for 3D solid objects. Triangle interiors do not deviate from the face interior by more than this amount.

  - **Tessellation tolerance**—The maximum distance allowed between an edge/curve and its tessellation. Triangle edges do not deviate from edges of the face by more than this amount, or by more than the maximum distance between the edge and the side of the facets along the edge when used in face triangulation.

Tip: If you only want tessellation of edges/curves, enter values for the tessellation tolerance and angular tolerance.

Note: Both planar and tessellation tolerance are considered in the units of the model being meshed. Therefore, they should be set to a similar value according to the model size to noticeably reduce the number of triangles generated. Model size/100 is a good starting point depending whether you want a fine or coarse mesh.

- **Display**—Used to display 2D vectors and 3D solids, or 3D solids only.
  - **2D vector and 3D solids**—Displays 2D vectors and 3D solids. Only the tessellation of 2D vectors is affected.
  - **3D solids**—Displays 3D solid objects only. As planar tolerance is for face triangulation of 3D solid objects only, this selection ensures planar tolerance affects the tessellation.
- **Tessellation**—Used to select the tessellation with which to import the file.
  - **Default**—Imports the file using the default tessellation settings.
  - **Custom**—Imports the file using the customized tessellation settings.

Geometry Transform (on page 44)—Used to transform (rotate, position, and scale) the scene along the X, Y, and Z axes.

- **Rotation**—Used to set the degrees of rotation around each axis from 0 to 360 degrees. The rotation values can be entered with up to 6 decimal places.
  - **X**—Rotates the scene along the X axis.
  - **Y**—Rotates the scene along the Y axis.
  - **Z**—Rotates the scene along the Z axis.
- **Position**—Used to set the position of the scene along the X, Y, and Z axes.
  - **X**—Positions the scene along the X axis.
  - **Y**—Positions the scene along the Y axis.
  - **Z**—Positions the scene along the Z axis.
- **Scale**—Used to scale the object along the X, Y, and Z axes.
  - **X**—Scales the scene along the X axis.
  - **Y**—Scales the scene along the Y axis.
  - **Z**—Scales the scene along the Z axis.

Copyright © Right Hemisphere 2006. All Rights Reserved.

Hewlett-Packard Graphics Library Import (.plt)

You can view Hewlett-Packard Graphics Library (.plt) files.

The .plt file format (HPGL) is the standard language for printing line drawings. PLT files are supported by many CAD, charting, and word processing applications.

For further information on using files, please see Opening Files **(on page 42)**, Importing Files (on page 43), and Saving Files (on page 56).

IGES Format Import (.iges, .igs)

You can import and view IGES (Initial Graphics Exchange Specification) Format (.iges, .igs) files.

The .iges and .igs file formats are used to share high-quality CAD data. These formats can represent many different types of data, ranging from lines and arcs to complex geometric solids, such as cylinders and cones; these are commonly known as 'constructive solid geometry'.

The import options differ depending on the version of Deep Exploration you have installed:

- Certain options are available with the CAD Edition of Deep Exploration.
- Certain options are available with the Standard Edition of Deep Exploration and the CoreCAD Module or Pro/E Module.

Note that support for the CAD format versions (on page 526) also differs depending on the version of Deep Exploration you have installed.

Import Rules

The following rules apply when importing Pro/E files:

- When a file is first opened with the Pro/E Module, a medium resolution is used by default for fast file loading, and a dialog displays these resolution settings.

  Note: You can retrieve color information.

- The latest version of any part file within the folder is always opened. For example, sprng.prt.3 is opened if the folder contains spring.prt.1, spring.prt.2 and spring.prt.3.
- Parts and sub-assemblies are added to the external files list.
- Sub-assembly hierarchy is added for all part files, if any.
- Pro/E searches through folders for part and assembly files and for corresponding accelerator files (on page 48):

1. The current directory of the file.
2. In the search paths specified in the CAD Modules tab (on page 227).

If a part, assembly or accelerator file is not found, a message is displayed next to the object in the Scene Components panel **(on page 266)** advising you of this.

IGES Format CAD Edition Import

You can import and view IGES (Initial Graphics Exchange Specification) Format (.iges, .igs) files using the import options delivered with the CAD Edition of Deep Exploration.

For further information on using files, please see Opening Files **(on page 42)**, Importing Files (on page 43), and Saving Files (on page 56).

Support

- All IGES surface and 3D curves.
- 2D vector data (text and dimensions).
- Assembly hierarchy.
- Meshes.
- Parts data.
- Material and object names.

Copyright © Right Hemisphere 2006. All Rights Reserved.

- Tessellation control.

Limitations

- Animation.
- BOM support based on part names.
- Configurations.
- Solids/NURBS.
- Textures.
- UV coordinates.

Interface

Common—Used to establish the common settings including tessellation (arrangement and density of the polygons) settings. Note that if you enter 0 (zero) for any of the tessellation settings, they are not taken into effect during the tessellation process.

- **Surface deviation** (on page 45)—Determines the maximum distance allowed between original analytical surface and its tessellated representation. Triangle edges do not deviate from edges of the face by more than this amount. The units are expressed as unit size based on those used by the model. A smaller surface deviation produces more triangles for smoother models.
- **Normal deviation** (on page 45)—Determines the maximum angular deviation (in degrees) allowed between a analytical surface and its triangulation. Pairs of triangles do not incorporate a dihedral angle greater than this amount. For example, this setting dictates the minimum number of facets around a smaller circle or cylinder regardless of the Surface Deviation setting. This parameter gives you added control over faces with very small radii. Lower values result in finer tessellations, while higher values give coarser tessellations.
- **Import hidden objects**—Imports all hidden objects. If, after importing a file, you modify any visible objects that contain hidden sub-objects after import, those hidden objects are also modified.
- **Display hidden objects**—Displays all hidden objects in the viewport after importing the file.
- **Import sheet bodies**—Imports all construction geometry. Sheet bodies are flat surfaces from which each object is cut.

  Note: If a file contains sheet bodies, this option must be selected for the file to be imported correctly.

- **Import wireframes**—Imports all wireframes if any exist.
- **Unit**—Used to select the unit type for which you want to view its custom unit (scene unit) measurement in meters. For example, 1 custom unit = 0.01 meters.
  - **File default**—Imports the file using the file's units.
  - **Millimeters**—Imports the file in millimeters (mm).
  - **Centimeters**—Imports the file in centimeters (cm).
  - **Meters**—Imports the file in meters (m).
  - **Inches**—Imports the file in inches (in).
  - **Feet**—Imports the file in feet (ft).
- **Ignore material opacity**—Disregards any material transparency that may have been set in the original file via an external application. That is, all the objects appear opaque. For example, a material opacity of 30% for an object is ignored, and the object is displayed with 100% opacity.
- **Auto-correct view orientation**—Attempts to correct the file's original view orientation to align with Deep Exploration's view orientation.

Geometry Transform (on page 44)—Used to transform (rotate, position, and scale) the scene along the X, Y, and Z axes.

- **Rotation**—Used to set the degrees of rotation around each axis from 0 to 360 degrees. The rotation values can be entered with up to 6 decimal places.
  - **X**—Rotates the scene along the X axis.
  - **Y**—Rotates the scene along the Y axis.
  - **Z**—Rotates the scene along the Z axis.
- **Position**—Used to set the position of the scene along the X, Y, and Z axes.
  - **X**—Positions the scene along the X axis.
  - **Y**—Positions the scene along the Y axis.
  - **Z**—Positions the scene along the Z axis.
- **Scale**—Used to scale the object along the X, Y, and Z axes.
  - **X**—Scales the scene along the X axis.
  - **Y**—Scales the scene along the Y axis.
  - **Z**—Scales the scene along the Z axis.

IGES Format Import (.iges, .igs)

You can import and view IGES (Initial Graphics Exchange Specification) Format (.iges, .igs) files.

The .iges and .igs file formats are used to share high-quality CAD data. These formats can represent many different types of data, ranging from lines and arcs to complex geometric solids, such as cylinders and cones; these are commonly known as 'constructive solid geometry'.

For further information on using files, please see Opening Files (on page 42), Importing Files (on page 43), and Saving Files (on page 56).

Support

- All IGES surface and 3D curves.
- 2D vector data (text and dimensions) when importing with the CoreCAD Module.
- 2D vector data when importing with the Pro/E Module.
- Assembly hierarchy.
- Meshes.
- Parts data.
- Material and object names.
- Tessellation control is supported when importing using Method A.
- UV coordinates are supported when importing with the Pro/E Module using the Legacy method.

Limitations

- Animation.
- BOM support based on part names.
- Configurations.
- Solids/NURBS.
- Textures.

Copyright © Right Hemisphere 2006. All Rights Reserved.

Interface

Import Method—Used to establish the way in which to import the file.

- **Method**—The method in which the file is imported. Each method utilizes differing import options to import the file.
  - **Method A**—Imports the file using Method A.
  - **Legacy**—Imports the file using the Legacy method.

Method A—Used to establish the Method A settings.

- **Surface deviation** (on page 45)—Determines the maximum distance allowed between original analytical surface and its tessellated representation. Triangle edges do not deviate from edges of the face by more than this amount. The units are expressed as unit size based on those used by the model. A smaller surface deviation produces more triangles for smoother models.
- **Normal deviation** (on page 45)—Determines the maximum angular deviation (in degrees) allowed between a analytical surface and its triangulation. Pairs of triangles do not incorporate a dihedral angle greater than this amount. For example, this setting dictates the minimum number of facets around a smaller circle or cylinder regardless of the Surface Deviation setting. This parameter gives you added control over faces with very small radii. Lower values result in finer tessellations, while higher values give coarser tessellations.
- **Import hidden objects**—Imports all hidden objects. If, after importing a file, you modify any visible objects that contain hidden sub-objects after import, those hidden objects are also modified.
- **Display hidden objects**—Displays all hidden objects in the viewport after importing the file.
- **Import sheet bodies**—Imports all construction geometry. Sheet bodies are flat surfaces from which each object is cut.

  Note: If a file contains sheet bodies, this option must be selected for the file to be imported correctly.

- **Import wireframes**—Imports all wireframes if any exist.
- **Unit**—Used to select the unit type for which you want to view its custom unit (scene unit) measurement in meters. For example, 1 custom unit = 0.01 meters.
  - **File default**—Imports the file using the file's units.
  - **Millimeters**—Imports the file in millimeters (mm).
  - **Centimeters**—Imports the file in centimeters (cm).
  - **Meters**—Imports the file in meters (m).
  - **Inches**—Imports the file in inches (in).
  - **Feet**—Imports the file in feet (ft).
- **Ignore material opacity**—Disregards any material transparency that may have been set in the original file via an external application. That is, all the objects appear opaque. For example, a material opacity of 30% for an object is ignored, and the object is displayed with 100% opacity.
- **Auto-correct view orientation**—Attempts to correct the file's original view orientation to align with Deep Exploration's view orientation.
- **Import PMI** (on page 194)—Displays the Product Manufacturing Information (PMI) in the 3D Objects list and creates a camera for every model view found within the file. The cameras are created in a Model View folder for each object that has a model view. You can view the scene through one of these cameras.

Legacy—Used to establish the Legacy settings.

- **Default Tessellation** (on page 45)—Used to import the file using the default tessellation settings (arrangement and density of the polygons).

Note: If you enter 0 (zero) for any of the tessellation settings, they are not taken into effect during the tessellation process.

- **Tessellation**—Used to import the file using the level of tessellation.
  - **Very high**—Displays a very high resolution using the values directly from the file. You are able to set custom values to give you a higher tessellation if a file has a very high polygon count. Note that using this option reduces processing speed.
  - **High**—Displays a high resolution with a high number of polygons. That is, the planer tolerance is set to the tessellation tolerance.
  - **Medium**—Displays a medium resolution with a medium number of polygons. That is, the planer tolerance is set to the tessellation tolerance and both are multiplied by 10.
  - **Low**—Displays a low resolution with a low number of polygons. That is, the planer tolerance is set to the tessellation tolerance and both are multiplied by 100. This option increases processing speed.

- **Custom Tessellation** (on page 45)—Used to customize the tessellation settings for all objects within the model. These settings are used when you triangulate (mesh) the faces/bodies of the model.

Note: If you enter 0 (zero) for any of the tessellation settings, they are not taken into effect during the tessellation process.

- **Angle tolerance**—The maximum angular deviation allowed between a face and its triangulation. Pairs of triangles do not incorporate a dihedral angle greater than this amount. This parameter gives a user added control over faces with very small radii. Lower values result in finer tessellations, while higher values give coarser tessellations.
- **Planar tolerance**—The maximum distance allowed between a face and its triangulation for 3D solid objects. Triangle interiors do not deviate from the face interior by more than this amount.
- **Tessellation tolerance**—The maximum distance allowed between an edge/curve and its tessellation. Triangle edges do not deviate from edges of the face by more than this amount, or by more than the maximum distance between the edge and the side of the facets along the edge when used in face triangulation.

Tip: If you only want tessellation of edges/curves, enter values for the tessellation tolerance and angular tolerance.

Note: Both planar and tessellation tolerance are considered in the units of the model being meshed. Therefore, they should be set to a similar value according to the model size to noticeably reduce the number of triangles generated. Model size/100 is a good starting point depending whether you want a fine or coarse mesh.

- **Display**—Used to display 2D vectors and 3D solids, or 3D solids only.
  - **2D vector and 3D solids**—Displays 2D vectors and 3D solids. Only the tessellation of 2D vectors is affected.
  - **3D solids**—Displays 3D solid objects only. As planar tolerance is for face triangulation of 3D solid objects only, this selection ensures planar tolerance affects the tessellation.
- **Tessellation**—Used to select the tessellation with which to import the file.
  - **Default**—Imports the file using the default tessellation settings.
  - **Custom**—Imports the file using the customized tessellation settings.

Geometry Transform (on page 44)—Used to transform (rotate, position, and scale) the scene along the X, Y, and Z axes.

- **Rotation**—Used to set the degrees of rotation around each axis from 0 to 360 degrees. The rotation values can be entered with up to 6 decimal places.
  - **X**—Rotates the scene along the X axis.

Copyright © Right Hemisphere 2006. All Rights Reserved.

  - **Y**—Rotates the scene along the Y axis.
  - **Z**—Rotates the scene along the Z axis.
- **Position**—Used to set the position of the scene along the X, Y, and Z axes.
  - **X**—Positions the scene along the X axis.
  - **Y**—Positions the scene along the Y axis.
  - **Z**—Positions the scene along the Z axis.
- **Scale**—Used to scale the object along the X, Y, and Z axes.
  - **X**—Scales the scene along the X axis.
  - **Y**—Scales the scene along the Y axis.
  - **Z**—Scales the scene along the Z axis.

IronCAD 3D CAD Import (.ics)

You can import and view IronCAD 3D CAD (.ics) files using the import options delivered with the Standard Edition of Deep Exploration, the gPlug Module, and the Pro/E Module.

For further information on using files, please see Opening Files **(on page 42)**, Importing Files (on page 43), and Saving Files (on page 56).

Support

- 2D vector data.
- Assembly hierarchy.
- Meshes.
- Parts data.
- UV coordinates.
- Tessellation control.

Limitations

- Animation.
- Assembly data.
- BOM support based on part names.
- Configurations.
- Material attributes.
- Parts data.
- Solids/NURBS.
- Textures.

Interface

Legacy—Used to establish the Legacy settings.

- **Default Tessellation** (on page 45)—Used to import the file using the default tessellation settings (arrangement and density of the polygons).

  Note: If you enter 0 (zero) for any of the tessellation settings, they are not taken into effect during the tessellation process.

  - **Tessellation**—Used to import the file using the level of tessellation.
    - **Very high**—Displays a very high resolution using the values directly from the file. You are able to set custom values to give you a higher tessellation if a file has a very high polygon count. Note that using this option reduces processing speed.
    - **High**—Displays a high resolution with a high number of polygons. That is, the planer tolerance is set to the tessellation tolerance.
    - **Medium**—Displays a medium resolution with a medium number of polygons. That is, the planer tolerance is set to the tessellation tolerance and both are multiplied by 10.
    - **Low**—Displays a low resolution with a low number of polygons. That is, the planer tolerance is set to the tessellation tolerance and both are multiplied by 100. This option increases processing speed.
- **Custom Tessellation** (on page 45)—Used to customize the tessellation settings for all objects within the model. These settings are used when you triangulate (mesh) the faces/bodies of the model.

Copyright © Right Hemisphere 2006. All Rights Reserved.

Note: If you enter 0 (zero) for any of the tessellation settings, they are not taken into effect during the tessellation process.

- **Angle tolerance**—The maximum angular deviation allowed between a face and its triangulation. Pairs of triangles do not incorporate a dihedral angle greater than this amount. This parameter gives a user added control over faces with very small radii. Lower values result in finer tessellations, while higher values give coarser tessellations.
- **Planar tolerance**—The maximum distance allowed between a face and its triangulation for 3D solid objects. Triangle interiors do not deviate from the face interior by more than this amount.
- **Tessellation tolerance**—The maximum distance allowed between an edge/curve and its tessellation. Triangle edges do not deviate from edges of the face by more than this amount, or by more than the maximum distance between the edge and the side of the facets along the edge when used in face triangulation.

Tip: If you only want tessellation of edges/curves, enter values for the tessellation tolerance and angular tolerance.

Note: Both planar and tessellation tolerance are considered in the units of the model being meshed. Therefore, they should be set to a similar value according to the model size to noticeably reduce the number of triangles generated. Model size/100 is a good starting point depending whether you want a fine or coarse mesh.

- **Display**—Used to display 2D vectors and 3D solids, or 3D solids only.
  - **2D vector and 3D solids**—Displays 2D vectors and 3D solids. Only the tessellation of 2D vectors is affected.
  - **3D solids**—Displays 3D solid objects only. As planar tolerance is for face triangulation of 3D solid objects only, this selection ensures planar tolerance affects the tessellation.
- **Tessellation**—Used to select the tessellation with which to import the file.
  - **Default**—Imports the file using the default tessellation settings.
  - **Custom**—Imports the file using the customized tessellation settings.

Geometry Transform (on page 44)—Used to transform (rotate, position, and scale) the scene along the X, Y, and Z axes.

- **Rotation**—Used to set the degrees of rotation around each axis from 0 to 360 degrees. The rotation values can be entered with up to 6 decimal places.
  - **X**—Rotates the scene along the X axis.
  - **Y**—Rotates the scene along the Y axis.
  - **Z**—Rotates the scene along the Z axis.
- **Position**—Used to set the position of the scene along the X, Y, and Z axes.
  - **X**—Positions the scene along the X axis.
  - **Y**—Positions the scene along the Y axis.
  - **Z**—Positions the scene along the Z axis.
- **Scale**—Used to scale the object along the X, Y, and Z axes.
  - **X**—Scales the scene along the X axis.
  - **Y**—Scales the scene along the Y axis.
  - **Z**—Scales the scene along the Z axis.

JT File Import (.jt)

You can import and view JT File (.jt) files.

JT files represent an extremely robust and flexible data format, capable of storing directly renderable geometry, analytical geometry, geometric attributes, user metadata, hierarchical CAD product structure, and CAD Product Manufacturing Information (PMI) data including Geometric Dimensioning and Tolerance (GD&T) data.

Note that GD&T is also known as Feature Dimensioning and Tolerance (FD&T).

The import options differ depending on the version of Deep Exploration you have installed:

- Certain options are available with the CAD Edition of Deep Exploration.
- Certain options are available with the Standard Edition of Deep Exploration and the JT Module.

Note that support for the CAD format versions (on page 526) also differs depending on the version of Deep Exploration you have installed.

JT File CAD Edition Import

You can import and view JT File (.jt) files using the import options delivered with the CAD Edition of Deep Exploration.

For further information on using files, please see Opening Files **(on page 42)**, Importing Files (on page 43), and Saving Files (on page 56).

Support

- 2D vector data.
- Assembly hierarchy.
- Materials and object names.
- Meshes.
- NURBS.
- Parts data.
- UV coordinates.
- Textures.

Limitations

- Animation.
- BOM support based on part names.
- Configurations.
- PMI.
- Solids.
- Tessellation control.

Interface

Common—Used to establish the common settings.

Copyright © Right Hemisphere 2006. All Rights Reserved.

- **Level of detail**—Used to establish the level of detail (LOD) to import. LOD is a way of displaying models with different numbers of polygons and can be helpful depending on how you view the model; in detail or from a distance. This can speed up the rendering time by limiting the number of polygons that need to be drawn.
  - **All**—Imports every level of detail. This can reduce the rendering time if the model has a large number of polygons. Note that when you use this option, all LODs are visible in the scene.
  - **Highest**—Imports only the highest level of detail. This helps to speed up rendering time for models that need to be viewed in detail.
  - **Lowest**—Imports only the lowest level of detail. This helps to speed up rendering time for models that only need to be viewed from a distance.
- **Import hidden objects**—Imports all hidden objects. If, after importing a file, you modify any visible objects that contain hidden sub-objects after import, those hidden objects are also modified.
- **Display hidden objects**—Displays all hidden objects in the viewport after importing the file.
- **Import sheet bodies**—Imports all construction geometry. Sheet bodies are flat surfaces from which each object is cut.

  Note: If a file contains sheet bodies, this option must be selected for the file to be imported correctly.

- **Import wireframes**—Imports all wireframes if any exist.
- **Unit**—Used to select the unit type for which you want to view its custom unit (scene unit) measurement in meters. For example, 1 custom unit = 0.01 meters.
  - **File default**—Imports the file using the file's units.
  - **Millimeters**—Imports the file in millimeters (mm).
  - **Centimeters**—Imports the file in centimeters (cm).
  - **Meters**—Imports the file in meters (m).
  - **Inches**—Imports the file in inches (in).
  - **Feet**—Imports the file in feet (ft).
- **Ignore material opacity**—Disregards any material transparency that may have been set in the original file via an external application. That is, all the objects appear opaque. For example, a material opacity of 30% for an object is ignored, and the object is displayed with 100% opacity.
- **Auto-correct view orientation**—Attempts to correct the file's original view orientation to align with Deep Exploration's view orientation.

Geometry Transform (on page 44)—Used to transform (rotate, position, and scale) the scene along the X, Y, and Z axes.

- **Rotation**—Used to set the degrees of rotation around each axis from 0 to 360 degrees. The rotation values can be entered with up to 6 decimal places.
  - **X**—Rotates the scene along the X axis.
  - **Y**—Rotates the scene along the Y axis.
  - **Z**—Rotates the scene along the Z axis.
- **Position**—Used to set the position of the scene along the X, Y, and Z axes.
  - **X**—Positions the scene along the X axis.
  - **Y**—Positions the scene along the Y axis.
  - **Z**—Positions the scene along the Z axis.
- **Scale**—Used to scale the object along the X, Y, and Z axes.
  - **X**—Scales the scene along the X axis.
  - **Y**—Scales the scene along the Y axis.

- **Z**—Scales the scene along the Z axis.

JT File Import (.jt)

You can import and view JT File (.jt) files.

JT files represent an extremely robust and flexible data format, capable of storing directly renderable geometry, analytical geometry, geometric attributes, user metadata, hierarchical CAD product structure, and CAD Product Manufacturing Information (PMI) data including Geometric Dimensioning and Tolerance (GD&T) data.

Note that GD&T is also known as Feature Dimensioning and Tolerance (FD&T).

For further information on using files, please see Opening Files **(on page 42)**, Importing Files (on page 43), and Saving Files (on page 56).

Support

- 2D vector data.
- Assembly hierarchy.
- Materials and object names.
- Meshes.
- NURBS.
- Parts data.
- PMI is supported when importing using the Legacy method.
- UV coordinates.
- Textures.

Limitations

- Animation.
- BOM support based on part names.
- Configurations.
- Solids.
- Tessellation control.

Interface

Import Method—Used to establish the way in which to import the file.

- **Method**—The method in which the file is imported. Each method utilizes differing import options to import the file.
  - **Method A**—Imports the file using Method A.
  - **Legacy**—Imports the file using the Legacy method.

Method A—Used to establish the Method A settings.

- **Unit**—Used to select the unit type for which you want to view its custom unit (scene unit) measurement in meters. For example, 1 custom unit = 0.01 meters.
  - **File default**—Imports the file using the file's units.
  - **Millimeters**—Imports the file in millimeters (mm).
  - **Centimeters**—Imports the file in centimeters (cm).

Copyright © Right Hemisphere 2006. All Rights Reserved.

  - **Meters**—Imports the file in meters (m).
  - **Inches**—Imports the file in inches (in).
  - **Feet**—Imports the file in feet (ft).
- **Ignore material opacity**—Disregards any material transparency that may have been set in the original file via an external application. That is, all the objects appear opaque. For example, a material opacity of 30% for an object is ignored, and the object is displayed with 100% opacity.
- **Auto-correct view orientation**—Attempts to correct the file's original view orientation to align with Deep Exploration's view orientation.
- **Level of detail**—Used to establish the level of detail (LOD) to import. LOD is a way of displaying models with different numbers of polygons and can be helpful depending on how you view the model; in detail or from a distance. This can speed up the rendering time by limiting the number of polygons that need to be drawn.
  - **All**—Imports every level of detail. This can reduce the rendering time if the model has a large number of polygons. Note that when you use this option, all LODs are visible in the scene.
  - **Highest**—Imports only the highest level of detail. This helps to speed up rendering time for models that need to be viewed in detail.
  - **Lowest**—Imports only the lowest level of detail. This helps to speed up rendering time for models that only need to be viewed from a distance.

Legacy—Used to establish the Legacy settings.

- **Import preference**—Used to establish the method used to import the surface definition of the file's model. JT files can store both NURBS and polygonal mesh information. Deep Exploration can import both of these information types.
  - **Meshes**—Imports the surface as mesh objects.
  - **NURBS**—Imports the surface as NURBS objects. If the file does not contain NURBS information and you select to import NURBS, mesh information is imported.
  - **Level of detail**—Used to establish the level of detail (LOD) to import. LOD is a way of displaying models with different numbers of polygons and can be helpful depending on how you view the model; in detail or from a distance. This can speed up the rendering time by limiting the number of polygons that need to be drawn.
    - **All**—Imports every level of detail. This can reduce the rendering time if the model has a large number of polygons. Note that when you use this option, all LODs are visible in the scene.
    - **Highest**—Imports only the highest level of detail. This helps to speed up rendering time for models that need to be viewed in detail.
    - **Lowest**—Imports only the lowest level of detail. This helps to speed up rendering time for models that only need to be viewed from a distance.
- **Join equal points**—Joins all the points that have equal (coincident) x,y,z coordinates. This smooths the lines enhancing the illustration quality, and it reduces the number of polygons resulting in a smaller file. Note that joining equal points processes points on an object by object basis, and does not look at coincident points between adjacent objects.
- **Import PMI** (on page 194)—Displays the Product Manufacturing Information (PMI) in the 3D Objects list and creates a camera for every model view found within the file. The cameras are created in a Model View folder for each object that has a model view. You can view the scene through one of these cameras.

Geometry Transform (on page 44)—Used to transform (rotate, position, and scale) the scene along the X, Y, and Z axes.

- **Rotation**—Used to set the degrees of rotation around each axis from 0 to 360 degrees. The rotation values can be entered with up to 6 decimal places.
  - **X**—Rotates the scene along the X axis.
  - **Y**—Rotates the scene along the Y axis.

  - **Z**—Rotates the scene along the Z axis.
- **Position**—Used to set the position of the scene along the X, Y, and Z axes.
  - **X**—Positions the scene along the X axis.
  - **Y**—Positions the scene along the Y axis.
  - **Z**—Positions the scene along the Z axis.
- **Scale**—Used to scale the object along the X, Y, and Z axes.
  - **X**—Scales the scene along the X axis.
  - **Y**—Scales the scene along the Y axis.
  - **Z**—Scales the scene along the Z axis.

Copyright © Right Hemisphere 2006. All Rights Reserved.

Lattice XVL Structure and Geometry Import (.xv0, .xv3)

You can import and view Lattice XVL Structure (.xv0) and Geometry (.xv3) files.

The .xv0 and .xv3 formats were developed by Lattice Technologies Incorporated and are a Precise eXtensible Virtual world description Language (P-XVL) files. The P-XVL format offers high compressibility and accuracy that is comparable to other 3D CAD file formats.

The import options differ depending on the version of Deep Exploration you have installed:

- Certain options are available with the CAD Edition of Deep Exploration.
- Certain options are available with the Standard Edition of Deep Exploration and the XVL Module.

Note that support for the CAD format versions (on page 526) also differs depending on the version of Deep Exploration you have installed.

Lattice XVL Structure and Geometry CAD Edition Import

You can import and view Lattice XVL Structure (.xv0) and Geometry (.xv3) files using the import options delivered with the CAD Edition of Deep Exploration.

For further information on using files, please see Opening Files **(on page 42)**, Importing Files (on page 43), and Saving Files (on page 56).

Interface

Common—Used to establish the common settings including tessellation (arrangement and density of the polygons) settings. Note that if you enter 0 (zero) for any of the tessellation settings, they are not taken into effect during the tessellation process.

- **Surface deviation** (on page 45)—Determines the maximum distance allowed between original analytical surface and its tessellated representation. Triangle edges do not deviate from edges of the face by more than this amount. The units are expressed as unit size based on those used by the model. A smaller surface deviation produces more triangles for smoother models.
- **Normal deviation** (on page 45)—Determines the maximum angular deviation (in degrees) allowed between a analytical surface and its triangulation. Pairs of triangles do not incorporate a dihedral angle greater than this amount. For example, this setting dictates the minimum number of facets around a smaller circle or cylinder regardless of the Surface Deviation setting. This parameter gives you added control over faces with very small radii. Lower values result in finer tessellations, while higher values give coarser tessellations.
- **Import hidden objects**—Imports all hidden objects. If, after importing a file, you modify any visible objects that contain hidden sub-objects after import, those hidden objects are also modified.
- **Display hidden objects**—Displays all hidden objects in the viewport after importing the file.
- **Import sheet bodies**—Imports all construction geometry. Sheet bodies are flat surfaces from which each object is cut.

  Note: If a file contains sheet bodies, this option must be selected for the file to be imported correctly.

- **Import wireframes**—Imports all wireframes if any exist.
- **Unit**—Used to select the unit type for which you want to view its custom unit (scene unit) measurement in meters. For example, 1 custom unit = 0.01 meters.
  - **File default**—Imports the file using the file's units.
  - **Millimeters**—Imports the file in millimeters (mm).

  - **Centimeters**—Imports the file in centimeters (cm).
  - **Meters**—Imports the file in meters (m).
  - **Inches**—Imports the file in inches (in).
  - **Feet**—Imports the file in feet (ft).
- **Ignore material opacity**—Disregards any material transparency that may have been set in the original file via an external application. That is, all the objects appear opaque. For example, a material opacity of 30% for an object is ignored, and the object is displayed with 100% opacity.
- **Auto-correct view orientation**—Attempts to correct the file's original view orientation to align with Deep Exploration's view orientation.

Geometry Transform (on page 44)—Used to transform (rotate, position, and scale) the scene along the X, Y, and Z axes.

- **Rotation**—Used to set the degrees of rotation around each axis from 0 to 360 degrees. The rotation values can be entered with up to 6 decimal places.
  - **X**—Rotates the scene along the X axis.
  - **Y**—Rotates the scene along the Y axis.
  - **Z**—Rotates the scene along the Z axis.
- **Position**—Used to set the position of the scene along the X, Y, and Z axes.
  - **X**—Positions the scene along the X axis.
  - **Y**—Positions the scene along the Y axis.
  - **Z**—Positions the scene along the Z axis.
- **Scale**—Used to scale the object along the X, Y, and Z axes.
  - **X**—Scales the scene along the X axis.
  - **Y**—Scales the scene along the Y axis.
  - **Z**—Scales the scene along the Z axis.

Lattice XVL Structure and Geometry Import (.xv0, .xv3)

You can import and view Lattice XVL Structure (.xv0) and Geometry (.xv3) files.

The .xv0 and .xv3 formats were developed by Lattice Technologies Incorporated and are a Precise eXtensible Virtual world description Language (P-XVL) files. The P-XVL format offers high compressibility and accuracy that is comparable to other 3D CAD file formats.

For further information on using files, please see Opening Files **(on page 42)**, Importing Files (on page 43), and Saving Files (on page 56).

Interface

Common—Used to establish the common settings including tessellation (arrangement and density of the polygons) settings. Note that if you enter 0 (zero) for any of the tessellation settings, they are not taken into effect during the tessellation process.

- **Surface deviation** (on page 45)—Determines the maximum distance allowed between original analytical surface and its tessellated representation. Triangle edges do not deviate from edges of the face by more than this amount. The units are expressed as unit size based on those used by the model. A smaller surface deviation produces more triangles for smoother models.

Copyright © Right Hemisphere 2006. All Rights Reserved.

- **Normal deviation** (on page 45)—Determines the maximum angular deviation (in degrees) allowed between a analytical surface and its triangulation. Pairs of triangles do not incorporate a dihedral angle greater than this amount. For example, this setting dictates the minimum number of facets around a smaller circle or cylinder regardless of the Surface Deviation setting. This parameter gives you added control over faces with very small radii. Lower values result in finer tessellations, while higher values give coarser tessellations.
- **Import hidden objects**—Imports all hidden objects. If, after importing a file, you modify any visible objects that contain hidden sub-objects after import, those hidden objects are also modified.
- **Display hidden objects**—Displays all hidden objects in the viewport after importing the file.
- **Import sheet bodies**—Imports all construction geometry. Sheet bodies are flat surfaces from which each object is cut.

  Note: If a file contains sheet bodies, this option must be selected for the file to be imported correctly.

- **Import wireframes**—Imports all wireframes if any exist.
- **Unit**—Used to select the unit type for which you want to view its custom unit (scene unit) measurement in meters. For example, 1 custom unit = 0.01 meters.
  - **File default**—Imports the file using the file's units.
  - **Millimeters**—Imports the file in millimeters (mm).
  - **Centimeters**—Imports the file in centimeters (cm).
  - **Meters**—Imports the file in meters (m).
  - **Inches**—Imports the file in inches (in).
  - **Feet**—Imports the file in feet (ft).
- **Ignore material opacity**—Disregards any material transparency that may have been set in the original file via an external application. That is, all the objects appear opaque. For example, a material opacity of 30% for an object is ignored, and the object is displayed with 100% opacity.
- **Auto-correct view orientation**—Attempts to correct the file's original view orientation to align with Deep Exploration's view orientation.

Geometry Transform (on page 44)—Used to transform (rotate, position, and scale) the scene along the X, Y, and Z axes.

- **Rotation**—Used to set the degrees of rotation around each axis from 0 to 360 degrees. The rotation values can be entered with up to 6 decimal places.
  - **X**—Rotates the scene along the X axis.
  - **Y**—Rotates the scene along the Y axis.
  - **Z**—Rotates the scene along the Z axis.
- **Position**—Used to set the position of the scene along the X, Y, and Z axes.
  - **X**—Positions the scene along the X axis.
  - **Y**—Positions the scene along the Y axis.
  - **Z**—Positions the scene along the Z axis.
- **Scale**—Used to scale the object along the X, Y, and Z axes.
  - **X**—Scales the scene along the X axis.
  - **Y**—Scales the scene along the Y axis.
  - **Z**—Scales the scene along the Z axis.

MicroStation CAD Graphic Import (.dgn)

You can import and view MicroStation CAD Graphic (.dgn) files.

For further information on using files, please see Opening Files **(on page 42)**, Importing Files (on page 43), and Saving Files (on page 56).

Support

- 2D vector data (text and dimensions).
- Assembly hierarchy.
- Meshes.
- Parts data.
- Material and object names.
- Tessellation control.
- Textures.

Limitations

- Animation.
- BOM support based on part names.
- Configurations.
- Solids/NURBS.
- UV coordinates.

Inteface

Common—Used to establish the common settings including tessellation (arrangement and density of the polygons) settings. Note that if you enter 0 (zero) for any of the tessellation settings, they are not taken into effect during the tessellation process.

- **Grouping**—Used to establish the object grouping.
  - **Level**—Groups objects by level.
  - **Group ID**—Groups objects by their group ID.
  - **Element type**—Groups objects by their element type. For example, cones, shapes, and BSpline surfaces.
- **Surface deviation** (on page 45)—Determines the maximum distance allowed between original analytical surface and its tessellated representation. Triangle edges do not deviate from edges of the face by more than this amount. The units are expressed as unit size based on those used by the model. A smaller surface deviation produces more triangles for smoother models.
- **Normal deviation** (on page 45)—Determines the maximum angular deviation (in degrees) allowed between a analytical surface and its triangulation. Pairs of triangles do not incorporate a dihedral angle greater than this amount. For example, this setting dictates the minimum number of facets around a smaller circle or cylinder regardless of the Surface Deviation setting. This parameter gives you added control over faces with very small radii. Lower values result in finer tessellations, while higher values give coarser tessellations. is this supposed to be here.
- **Grid aspect ratio** (on page 45)—Determines the ratio (between 0 and 1) of the width to height for each 'surface square'. For example, if you enter 1, the tessellation process attempts to produce squares instead of rectangles. This is helpful in avoiding the creation of very long, narrow triangles which can cause undesirable lighting and shading artifacts.
- **Polygon output**—Used to establish the shape of the polygons when importing the file.
  - **Only triangles**—Uses triangle-shaped polygons.

Copyright © Right Hemisphere 2006. All Rights Reserved.

  - **Quadrilaterals and triangles**—Uses a combination of quadrilateral and triangle-shaped polygons.
- **Import solids**—Imports all solids when importing the file. This option is helpful for previewing files when not selected.

  Note: Only wireframes are imported when this option is not selected.

- **Import text and tags**—Imports text and tags. Certain text is prevented from import such as numbers in dimensional information.

  Note: This option reduces memory and file importing performance.

- **Import external reference**—Imports all external reference files. This is helpful for viewing the contents of a selected file.

  Note: This option reduces memory and file importing performance.

- **Unit**—Used to select the unit type for which you want to view its custom unit (scene unit) measurement in meters. For example, 1 custom unit = 0.01 meters.
  - **File default**—Imports the file using the file's units.
  - **Millimeters**—Imports the file in millimeters (mm).
  - **Centimeters**—Imports the file in centimeters (cm).
  - **Meters**—Imports the file in meters (m).
  - **Inches**—Imports the file in inches (in).
  - **Feet**—Imports the file in feet (ft).
- **Ignore material opacity**—Disregards any material transparency that may have been set in the original file via an external application. That is, all the objects appear opaque. For example, a material opacity of 30% for an object is ignored, and the object is displayed with 100% opacity.
- **Auto-correct view orientation**—Attempts to correct the file's original view orientation to align with Deep Exploration's view orientation.

Geometry Transform (on page 44)—Used to transform (rotate, position, and scale) the scene along the X, Y, and Z axes.

- **Rotation**—Used to set the degrees of rotation around each axis from 0 to 360 degrees. The rotation values can be entered with up to 6 decimal places.
  - **X**—Rotates the scene along the X axis.
  - **Y**—Rotates the scene along the Y axis.
  - **Z**—Rotates the scene along the Z axis.
- **Position**—Used to set the position of the scene along the X, Y, and Z axes.
  - **X**—Positions the scene along the X axis.
  - **Y**—Positions the scene along the Y axis.
  - **Z**—Positions the scene along the Z axis.
- **Scale**—Used to scale the object along the X, Y, and Z axes.
  - **X**—Scales the scene along the X axis.
  - **Y**—Scales the scene along the Y axis.
  - **Z**—Scales the scene along the Z axis.

Neutral Part File Import (.neu)

You can import and view Neutral Part (.neu) files.

The import options differ depending on the version of Deep Exploration you have installed:

- Certain options are available with the CAD Edition of Deep Exploration.
- Certain options are available with the Standard Edition of Deep Exploration and the Pro/E Module.

Note that support for the CAD format versions (on page 526) also differs depending on the version of Deep Exploration you have installed.

Import Rules

The following rules apply when importing Pro/E files:

- When a file is first opened with the Pro/E Module, a medium resolution is used by default for fast file loading, and a dialog displays these resolution settings.
- The latest version of any part file within the folder is always opened. For example, sprng.prt.3 is opened if the folder contains spring.prt.1, spring.prt.2 and spring.prt.3.
- Parts and sub-assemblies are added to the external files list.
- Sub-assembly hierarchy is added for all part files, if any.
- Pro/E searches through folders for part and assembly files and for corresponding accelerator files (on page 48):

1. The current directory of the file.
2. In the search paths specified in the CAD Modules tab (on page 227).

If a part, assembly or accelerator file is not found, a message is displayed next to the object in the Scene Components panel **(on page 266)** advising you of this.

Neutral Part CAD Edition Import

You can import and view Neutral Part (.neu) files using the import options delivered with the CAD Edition of Deep Exploration.

For further information on using files, please see Opening Files **(on page 42)**, Importing Files (on page 43), and Saving Files (on page 56).

Support

- 2D vector data.
- Assembly hierarchy.
- Meshes.
- Parts data.
- Material and object names.
- Tessellation control.

Limitations

- Animation.
- BOM support based on part names.
- Configurations.

Copyright © Right Hemisphere 2006. All Rights Reserved.

- Solids/NURBS.
- Textures.
- UV coordinates.

Interface

Common—Used to establish the common settings including tessellation (arrangement and density of the polygons) settings. Note that if you enter 0 (zero) for any of the tessellation settings, they are not taken into effect during the tessellation process.

- **Surface deviation** (on page 45)—Determines the maximum distance allowed between original analytical surface and its tessellated representation. Triangle edges do not deviate from edges of the face by more than this amount. The units are expressed as unit size based on those used by the model. A smaller surface deviation produces more triangles for smoother models.
- **Normal deviation** (on page 45)—Determines the maximum angular deviation (in degrees) allowed between a analytical surface and its triangulation. Pairs of triangles do not incorporate a dihedral angle greater than this amount. For example, this setting dictates the minimum number of facets around a smaller circle or cylinder regardless of the Surface Deviation setting. This parameter gives you added control over faces with very small radii. Lower values result in finer tessellations, while higher values give coarser tessellations.
- **Import hidden objects**—Imports all hidden objects. If, after importing a file, you modify any visible objects that contain hidden sub-objects after import, those hidden objects are also modified.
- **Display hidden objects**—Displays all hidden objects in the viewport after importing the file.
- **Import sheet bodies**—Imports all construction geometry. Sheet bodies are flat surfaces from which each object is cut.

  Note: If a file contains sheet bodies, this option must be selected for the file to be imported correctly.

- **Import wireframes**—Imports all wireframes if any exist.
- **Unit**—Used to select the unit type for which you want to view its custom unit (scene unit) measurement in meters. For example, 1 custom unit = 0.01 meters.
  - **File default**—Imports the file using the file's units.
  - **Millimeters**—Imports the file in millimeters (mm).
  - **Centimeters**—Imports the file in centimeters (cm).
  - **Meters**—Imports the file in meters (m).
  - **Inches**—Imports the file in inches (in).
  - **Feet**—Imports the file in feet (ft).
- **Ignore material opacity**—Disregards any material transparency that may have been set in the original file via an external application. That is, all the objects appear opaque. For example, a material opacity of 30% for an object is ignored, and the object is displayed with 100% opacity.
- **Auto-correct view orientation**—Attempts to correct the file's original view orientation to align with Deep Exploration's view orientation.
- **Import PMI** (on page 194)—Displays the Product Manufacturing Information (PMI) in the 3D Objects list and creates a camera for every model view found within the file. The cameras are created in a Model View folder for each object that has a model view. You can view the scene through one of these cameras.

Geometry Transform (on page 44)—Used to transform (rotate, position, and scale) the scene along the X, Y, and Z axes.

- **Rotation**—Used to set the degrees of rotation around each axis from 0 to 360 degrees. The rotation values can be entered with up to 6 decimal places.
  - **X**—Rotates the scene along the X axis.

  - **Y**—Rotates the scene along the Y axis.
  - **Z**—Rotates the scene along the Z axis.
- **Position**—Used to set the position of the scene along the X, Y, and Z axes.
  - **X**—Positions the scene along the X axis.
  - **Y**—Positions the scene along the Y axis.
  - **Z**—Positions the scene along the Z axis.
- **Scale**—Used to scale the object along the X, Y, and Z axes.
  - **X**—Scales the scene along the X axis.
  - **Y**—Scales the scene along the Y axis.
  - **Z**—Scales the scene along the Z axis.

Neutral Part File Import (.neu)

You can import and view Neutral Part (.neu) files.

For further information on using files, please see Opening Files **(on page 42)**, Importing Files (on page 43), and Saving Files (on page 56).

Support

- 2D vector data.
- Assembly hierarchy.
- Meshes.
- Parts data.
- Material and object names.
- Tessellation control.
- UV coordinates is supported when importing using the Legacy method.

Limitations

- Animation.
- BOM support based on part names.
- Configurations.
- Solids/NURBS.
- Textures.

Interface

Import Method—Used to establish the way in which to import the file.

- **Method**—The method in which the file is imported. Each method utilizes differing import options to import the file.
  - **Method A**—Imports the file using Method A.
  - **Legacy**—Imports the file using the Legacy method.

Method A—Used to establish the Method A settings.

- **Surface deviation** (on page 45)—Determines the maximum distance allowed between original analytical surface and its tessellated representation. Triangle edges do not deviate from edges of the face by more than this amount. The units are expressed as unit size based on those used by the model. A smaller surface deviation produces more triangles for smoother models.

Copyright © Right Hemisphere 2006. All Rights Reserved.

- **Normal deviation** (on page 45)—Determines the maximum angular deviation (in degrees) allowed between a analytical surface and its triangulation. Pairs of triangles do not incorporate a dihedral angle greater than this amount. For example, this setting dictates the minimum number of facets around a smaller circle or cylinder regardless of the Surface Deviation setting. This parameter gives you added control over faces with very small radii. Lower values result in finer tessellations, while higher values give coarser tessellations.
- **Import hidden objects**—Imports all hidden objects. If, after importing a file, you modify any visible objects that contain hidden sub-objects after import, those hidden objects are also modified.
- **Display hidden objects**—Displays all hidden objects in the viewport after importing the file.
- **Import sheet bodies**—Imports all construction geometry. Sheet bodies are flat surfaces from which each object is cut.

  Note: If a file contains sheet bodies, this option must be selected for the file to be imported correctly.

- **Import wireframes**—Imports all wireframes if any exist.
- **Unit**—Used to select the unit type for which you want to view its custom unit (scene unit) measurement in meters. For example, 1 custom unit = 0.01 meters.
  - **File default**—Imports the file using the file's units.
  - **Millimeters**—Imports the file in millimeters (mm).
  - **Centimeters**—Imports the file in centimeters (cm).
  - **Meters**—Imports the file in meters (m).
  - **Inches**—Imports the file in inches (in).
  - **Feet**—Imports the file in feet (ft).
- **Ignore material opacity**—Disregards any material transparency that may have been set in the original file via an external application. That is, all the objects appear opaque. For example, a material opacity of 30% for an object is ignored, and the object is displayed with 100% opacity.
- **Auto-correct view orientation**—Attempts to correct the file's original view orientation to align with Deep Exploration's view orientation.
- **Import PMI** (on page 194)—Displays the Product Manufacturing Information (PMI) in the 3D Objects list and creates a camera for every model view found within the file. The cameras are created in a Model View folder for each object that has a model view. You can view the scene through one of these cameras.

Legacy—Used to establish the Legacy settings.

- **Default Tessellation** (on page 45)—Used to import the file using the default tessellation settings (arrangement and density of the polygons).

  Note: If you enter 0 (zero) for any of the tessellation settings, they are not taken into effect during the tessellation process.

  - **Tessellation**—Used to import the file using the level of tessellation.
    - **Very high**—Displays a very high resolution using the values directly from the file. You are able to set custom values to give you a higher tessellation if a file has a very high polygon count. Note that using this option reduces processing speed.
    - **High**—Displays a high resolution with a high number of polygons. That is, the planer tolerance is set to the tessellation tolerance.
    - **Medium**—Displays a medium resolution with a medium number of polygons. That is, the planer tolerance is set to the tessellation tolerance and both are multiplied by 10.
    - **Low**—Displays a low resolution with a low number of polygons. That is, the planer tolerance is set to the tessellation tolerance and both are multiplied by 100. This option increases processing speed.

- **Custom Tessellation** (on page 45)—Used to customize the tessellation settings for all objects within the model. These settings are used when you triangulate (mesh) the faces/bodies of the model.

  Note: If you enter 0 (zero) for any of the tessellation settings, they are not taken into effect during the tessellation process.

  - **Angle tolerance**—The maximum angular deviation allowed between a face and its triangulation. Pairs of triangles do not incorporate a dihedral angle greater than this amount. This parameter gives a user added control over faces with very small radii. Lower values result in finer tessellations, while higher values give coarser tessellations.
  - **Planar tolerance**—The maximum distance allowed between a face and its triangulation for 3D solid objects. Triangle interiors do not deviate from the face interior by more than this amount.
  - **Tessellation tolerance**—The maximum distance allowed between an edge/curve and its tessellation. Triangle edges do not deviate from edges of the face by more than this amount, or by more than the maximum distance between the edge and the side of the facets along the edge when used in face triangulation.

  Tip: If you only want tessellation of edges/curves, enter values for the tessellation tolerance and angular tolerance.

  Note: Both planar and tessellation tolerance are considered in the units of the model being meshed. Therefore, they should be set to a similar value according to the model size to noticeably reduce the number of triangles generated. Model size/100 is a good starting point depending whether you want a fine or coarse mesh.

- **Display**—Used to display 2D vectors and 3D solids, or 3D solids only.
  - **2D vector and 3D solids**—Displays 2D vectors and 3D solids. Only the tessellation of 2D vectors is affected.
  - **3D solids**—Displays 3D solid objects only. As planar tolerance is for face triangulation of 3D solid objects only, this selection ensures planar tolerance affects the tessellation.
- **Tessellation**—Used to select the tessellation with which to import the file.
  - **Default**—Imports the file using the default tessellation settings.
  - **Custom**—Imports the file using the customized tessellation settings.

Geometry Transform (on page 44)—Used to transform (rotate, position, and scale) the scene along the X, Y, and Z axes.

- **Rotation**—Used to set the degrees of rotation around each axis from 0 to 360 degrees. The rotation values can be entered with up to 6 decimal places.
  - **X**—Rotates the scene along the X axis.
  - **Y**—Rotates the scene along the Y axis.
  - **Z**—Rotates the scene along the Z axis.
- **Position**—Used to set the position of the scene along the X, Y, and Z axes.
  - **X**—Positions the scene along the X axis.
  - **Y**—Positions the scene along the Y axis.
  - **Z**—Positions the scene along the Z axis.
- **Scale**—Used to scale the object along the X, Y, and Z axes.
  - **X**—Scales the scene along the X axis.
  - **Y**—Scales the scene along the Y axis.
  - **Z**—Scales the scene along the Z axis.

Copyright © Right Hemisphere 2006. All Rights Reserved.

Parasolid CAD File Import (.x_b, .x_t, .xmt, .xmt_txt)

You can import and view Parasolid CAD (.x_b, .x_t, .xmt, .xmt_txt) files.

Parasolid X_T is the exchange format for Parasolid files. The X_T-format is used by different CAD/CAM-applications such as Unigraphics, SolidWorks, and SolidEdge.

The import options differ depending on the version of Deep Exploration you have installed:

- Certain options are available with the CAD Edition of Deep Exploration.
- Certain options are available with the Standard Edition of Deep Exploration and the CoreCAD Module or Pro/E Module.

Note that support for the CAD format versions (on page 526) also differs depending on the version of Deep Exploration you have installed.

Import Rules

The following rules apply when importing Pro/E files:

- When a file is first opened with the Pro/E Module, a medium resolution is used by default for fast file loading, and a dialog displays these resolution settings.
- The latest version of any part file within the folder is always opened. For example, sprng.prt.3 is opened if the folder contains spring.prt.1, spring.prt.2 and spring.prt.3.
- Parts and sub-assemblies are added to the external files list.
- Sub-assembly hierarchy is added for all part files, if any.
- Pro/E searches through folders for part and assembly files and for corresponding accelerator files (on page 48):

1. The current directory of the file.
2. In the search paths specified in the CAD Modules tab (on page 227).

If a part, assembly or accelerator file is not found, a message is displayed next to the object in the Scene Components panel **(on page 266)** advising you of this.

Parasolid CAD File CAD Edition Import

You can import and view Parasolid CAD (.x_b, .x_t, .xmt, .xmt_txt) files using the import options delivered with the CAD Edition of Deep Exploration.

For further information on using files, please see Opening Files **(on page 42)**, Importing Files (on page 43), and Saving Files (on page 56).

Support

- Assembly hierarchy.
- Meshes.
- Parts data.
- Material and object names.
- Tessellation control.

Limitations

- 2D vector data.
- Animation.
- BOM support based on part names.
- Configurations.
- Solids/NURBS.
- Textures.
- UV coordinates.

Interface

Common—Used to establish the common settings including tessellation (arrangement and density of the polygons) settings. Note that if you enter 0 (zero) for any of the tessellation settings, they are not taken into effect during the tessellation process.

- **Surface deviation** (on page 45)—Determines the maximum distance allowed between original analytical surface and its tessellated representation. Triangle edges do not deviate from edges of the face by more than this amount. The units are expressed as unit size based on those used by the model. A smaller surface deviation produces more triangles for smoother models.
- **Normal deviation** (on page 45)—Determines the maximum angular deviation (in degrees) allowed between a analytical surface and its triangulation. Pairs of triangles do not incorporate a dihedral angle greater than this amount. For example, this setting dictates the minimum number of facets around a smaller circle or cylinder regardless of the Surface Deviation setting. This parameter gives you added control over faces with very small radii. Lower values result in finer tessellations, while higher values give coarser tessellations.
- **Import hidden objects**—Imports all hidden objects. If, after importing a file, you modify any visible objects that contain hidden sub-objects after import, those hidden objects are also modified.
- **Display hidden objects**—Displays all hidden objects in the viewport after importing the file.
- **Import sheet bodies**—Imports all construction geometry. Sheet bodies are flat surfaces from which each object is cut.

  Note: If a file contains sheet bodies, this option must be selected for the file to be imported correctly.

- **Import wireframes**—Imports all wireframes if any exist.
- **Unit**—Used to select the unit type for which you want to view its custom unit (scene unit) measurement in meters. For example, 1 custom unit = 0.01 meters.
  - **File default**—Imports the file using the file's units.
  - **Millimeters**—Imports the file in millimeters (mm).
  - **Centimeters**—Imports the file in centimeters (cm).
  - **Meters**—Imports the file in meters (m).
  - **Inches**—Imports the file in inches (in).
  - **Feet**—Imports the file in feet (ft).
- **Ignore material opacity**—Disregards any material transparency that may have been set in the original file via an external application. That is, all the objects appear opaque. For example, a material opacity of 30% for an object is ignored, and the object is displayed with 100% opacity.
- **Auto-correct view orientation**—Attempts to correct the file's original view orientation to align with Deep Exploration's view orientation.

Geometry Transform (on page 44)—Used to transform (rotate, position, and scale) the scene along the X, Y, and Z axes.

Copyright © Right Hemisphere 2006. All Rights Reserved.

- **Rotation**—Used to set the degrees of rotation around each axis from 0 to 360 degrees. The rotation values can be entered with up to 6 decimal places.
  - **X**—Rotates the scene along the X axis.
  - **Y**—Rotates the scene along the Y axis.
  - **Z**—Rotates the scene along the Z axis.
- **Position**—Used to set the position of the scene along the X, Y, and Z axes.
  - **X**—Positions the scene along the X axis.
  - **Y**—Positions the scene along the Y axis.
  - **Z**—Positions the scene along the Z axis.
- **Scale**—Used to scale the object along the X, Y, and Z axes.
  - **X**—Scales the scene along the X axis.
  - **Y**—Scales the scene along the Y axis.
  - **Z**—Scales the scene along the Z axis.

Parasolid CAD File Import (.x_b, .x_t, .xmt, .xmt_txt)

You can import and view Parasolid CAD (.x_b, .x_t, .xmt, .xmt_txt) files.

Parasolid X_T is the exchange format for Parasolid files. The X_T-format is used by different CAD/CAM-applications such as Unigraphics, SolidWorks, and SolidEdge.

For further information on using files, please see Opening Files **(on page 42)**, Importing Files (on page 43), and Saving Files (on page 56).

Support

- Assembly hierarchy.
- Meshes.
- Parts data.
- Material and object names.
- Tessellation control is supported when importing using Method A.

Limitations

- 2D vector data.
- Animation.
- BOM support based on part names.
- Configurations.
- Solids/NURBS.
- Textures.
- UV coordinates.

Interface

Import Method—Used to establish the way in which to import the file.

- **Method**—The method in which the file is imported. Each method utilizes differing import options to import the file.
  - **Method A**—Imports the file using Method A.
  - **Legacy**—Imports the file using the Legacy method.

Method A—Used to establish the Method A settings.

- **Surface deviation** (on page 45)—Determines the maximum distance allowed between original analytical surface and its tessellated representation. Triangle edges do not deviate from edges of the face by more than this amount. The units are expressed as unit size based on those used by the model. A smaller surface deviation produces more triangles for smoother models.
- **Normal deviation** (on page 45)—Determines the maximum angular deviation (in degrees) allowed between a analytical surface and its triangulation. Pairs of triangles do not incorporate a dihedral angle greater than this amount. For example, this setting dictates the minimum number of facets around a smaller circle or cylinder regardless of the Surface Deviation setting. This parameter gives you added control over faces with very small radii. Lower values result in finer tessellations, while higher values give coarser tessellations.
- **Import hidden objects**—Imports all hidden objects. If, after importing a file, you modify any visible objects that contain hidden sub-objects after import, those hidden objects are also modified.
- **Display hidden objects**—Displays all hidden objects in the viewport after importing the file.
- **Import sheet bodies**—Imports all construction geometry. Sheet bodies are flat surfaces from which each object is cut.

  Note: If a file contains sheet bodies, this option must be selected for the file to be imported correctly.

- **Import wireframes**—Imports all wireframes if any exist.
- **Unit**—Used to select the unit type for which you want to view its custom unit (scene unit) measurement in meters. For example, 1 custom unit = 0.01 meters.
  - **File default**—Imports the file using the file's units.
  - **Millimeters**—Imports the file in millimeters (mm).
  - **Centimeters**—Imports the file in centimeters (cm).
  - **Meters**—Imports the file in meters (m).
  - **Inches**—Imports the file in inches (in).
  - **Feet**—Imports the file in feet (ft).
- **Ignore material opacity**—Disregards any material transparency that may have been set in the original file via an external application. That is, all the objects appear opaque. For example, a material opacity of 30% for an object is ignored, and the object is displayed with 100% opacity.
- **Auto-correct view orientation**—Attempts to correct the file's original view orientation to align with Deep Exploration's view orientation.
- **Import PMI** (on page 194)—Displays the Product Manufacturing Information (PMI) in the 3D Objects list and creates a camera for every model view found within the file. The cameras are created in a Model View folder for each object that has a model view. You can view the scene through one of these cameras.

Legacy—Used to establish the Legacy settings.

- **Default Tessellation** (on page 45)—Used to import the file using the default tessellation settings (arrangement and density of the polygons).

  Note: If you enter 0 (zero) for any of the tessellation settings, they are not taken into effect during the tessellation process.

  - **Tessellation**—Used to import the file using the level of tessellation.
    - **Very high**—Displays a very high resolution using the values directly from the file. You are able to set custom values to give you a higher tessellation if a file has a very high polygon count. Note that using this option reduces processing speed.
    - **High**—Displays a high resolution with a high number of polygons. That is, the planer tolerance is set to the tessellation tolerance.

Copyright © Right Hemisphere 2006. All Rights Reserved.

  - **Medium**—Displays a medium resolution with a medium number of polygons. That is, the planer tolerance is set to the tessellation tolerance and both are multiplied by 10.
  - **Low**—Displays a low resolution with a low number of polygons. That is, the planer tolerance is set to the tessellation tolerance and both are multiplied by 100. This option increases processing speed.
- **Custom Tessellation** (on page 45)—Used to customize the tessellation settings for all objects within the model. These settings are used when you triangulate (mesh) the faces/bodies of the model.

Note: If you enter 0 (zero) for any of the tessellation settings, they are not taken into effect during the tessellation process.

  - **Angle tolerance**—The maximum angular deviation allowed between a face and its triangulation. Pairs of triangles do not incorporate a dihedral angle greater than this amount. This parameter gives a user added control over faces with very small radii. Lower values result in finer tessellations, while higher values give coarser tessellations.
  - **Planar tolerance**—The maximum distance allowed between a face and its triangulation for 3D solid objects. Triangle interiors do not deviate from the face interior by more than this amount.
  - **Tessellation tolerance**—The maximum distance allowed between an edge/curve and its tessellation. Triangle edges do not deviate from edges of the face by more than this amount, or by more than the maximum distance between the edge and the side of the facets along the edge when used in face triangulation.

Tip: If you only want tessellation of edges/curves, enter values for the tessellation tolerance and angular tolerance.

Note: Both planar and tessellation tolerance are considered in the units of the model being meshed. Therefore, they should be set to a similar value according to the model size to noticeably reduce the number of triangles generated. Model size/100 is a good starting point depending whether you want a fine or coarse mesh.

- **Display**—Used to display 2D vectors and 3D solids, or 3D solids only.
  - **2D vector and 3D solids**—Displays 2D vectors and 3D solids. Only the tessellation of 2D vectors is affected.
  - **3D solids**—Displays 3D solid objects only. As planar tolerance is for face triangulation of 3D solid objects only, this selection ensures planar tolerance affects the tessellation.
- **Tessellation**—Used to select the tessellation with which to import the file.
  - **Default**—Imports the file using the default tessellation settings.
  - **Custom**—Imports the file using the customized tessellation settings.

Geometry Transform (on page 44)—Used to transform (rotate, position, and scale) the scene along the X, Y, and Z axes.

- **Rotation**—Used to set the degrees of rotation around each axis from 0 to 360 degrees. The rotation values can be entered with up to 6 decimal places.
  - **X**—Rotates the scene along the X axis.
  - **Y**—Rotates the scene along the Y axis.
  - **Z**—Rotates the scene along the Z axis.
- **Position**—Used to set the position of the scene along the X, Y, and Z axes.
  - **X**—Positions the scene along the X axis.
  - **Y**—Positions the scene along the Y axis.
  - **Z**—Positions the scene along the Z axis.
- **Scale**—Used to scale the object along the X, Y, and Z axes.

- **X**—Scales the scene along the X axis.
- **Y**—Scales the scene along the Y axis.
- **Z**—Scales the scene along the Z axis.

Copyright © Right Hemisphere 2006. All Rights Reserved.

Pro/ENGINEER Assembly Import (.asm)

You can import and view Pro/ENGINEER Assembly (.asm) files.

The import options differ depending on the version of Deep Exploration you have installed:

- Certain options are available with the CAD Edition of Deep Exploration.
- Certain options are available with the Standard Edition of Deep Exploration and the CoreCAD Module or Pro/E Module.

Note that support for the CAD format versions (on page 526) also differs depending on the version of Deep Exploration you have installed.

Import Rules

The following rules apply when importing Pro/E files:

- When a file is first opened with the Pro/E Module, a medium resolution is used by default for fast file loading, and a dialog displays these resolution settings.

  Note: You can retrieve color information for Pro/ENGINEER models, parts, and assemblies. However, for Pro/ENGINEER models, only the color saved in releases of Pro/ENGINEER Wildfire is retrieved.

- The latest version of any part file within the folder is always opened. For example, sprng.prt.3 is opened if the folder contains spring.prt.1, spring.prt.2 and spring.prt.3.
- Parts and sub-assemblies are added to the external files list.
- Sub-assembly hierarchy is added for all part files, if any.
- Pro/E searches through folders for part and assembly files and for corresponding accelerator files (on page 48):

1. The current directory of the file.
2. In the search paths specified in the CAD Modules tab (on page 227).

If a part, assembly or accelerator file is not found, a message is displayed next to the object in the Scene Components panel **(on page 266)** advising you of this.

Pro/ENGINEER Assembly CAD Edition Import

You can import and view Pro/ENGINEER Assembly (.asm) files using the import options delivered with the CAD Edition of Deep Exploration.

For further information on using files, please see Opening Files **(on page 42)**, Importing Files (on page 43), and Saving Files (on page 56).

Support

- 2D vector data.
- Assembly hierarchy.
- Meshes.
- Parts data.
- Material and object names.
- Tessellation control.

Limitations

- Animation.
- BOM support based on part names.
- Configurations.
- Solids/NURBS.
- Textures.
- UV coordinates.

Interface

Common—Used to establish the common settings including tessellation (arrangement and density of the polygons) settings. Note that if you enter 0 (zero) for any of the tessellation settings, they are not taken into effect during the tessellation process.

- **Surface deviation** (on page 45)—Determines the maximum distance allowed between original analytical surface and its tessellated representation. Triangle edges do not deviate from edges of the face by more than this amount. The units are expressed as unit size based on those used by the model. A smaller surface deviation produces more triangles for smoother models.
- **Normal deviation** (on page 45)—Determines the maximum angular deviation (in degrees) allowed between a analytical surface and its triangulation. Pairs of triangles do not incorporate a dihedral angle greater than this amount. For example, this setting dictates the minimum number of facets around a smaller circle or cylinder regardless of the Surface Deviation setting. This parameter gives you added control over faces with very small radii. Lower values result in finer tessellations, while higher values give coarser tessellations.
- **Import hidden objects**—Imports all hidden objects. If, after importing a file, you modify any visible objects that contain hidden sub-objects after import, those hidden objects are also modified.
- **Display hidden objects**—Displays all hidden objects in the viewport after importing the file.
- **Import sheet bodies**—Imports all construction geometry. Sheet bodies are flat surfaces from which each object is cut.

  Note: If a file contains sheet bodies, this option must be selected for the file to be imported correctly.

- **Import wireframes**—Imports all wireframes if any exist.
- **Unit**—Used to select the unit type for which you want to view its custom unit (scene unit) measurement in meters. For example, 1 custom unit = 0.01 meters.
  - **File default**—Imports the file using the file's units.
  - **Millimeters**—Imports the file in millimeters (mm).
  - **Centimeters**—Imports the file in centimeters (cm).
  - **Meters**—Imports the file in meters (m).
  - **Inches**—Imports the file in inches (in).
  - **Feet**—Imports the file in feet (ft).
- **Ignore material opacity**—Disregards any material transparency that may have been set in the original file via an external application. That is, all the objects appear opaque. For example, a material opacity of 30% for an object is ignored, and the object is displayed with 100% opacity.
- **Auto-correct view orientation**—Attempts to correct the file's original view orientation to align with Deep Exploration's view orientation.

Copyright © Right Hemisphere 2006. All Rights Reserved.

- **Import PMI** (on page 194)—Displays the Product Manufacturing Information (PMI) in the 3D Objects list and creates a camera for every model view found within the file. The cameras are created in a Model View folder for each object that has a model view. You can view the scene through one of these cameras.

Geometry Transform (on page 44)—Used to transform (rotate, position, and scale) the scene along the X, Y, and Z axes.

- **Rotation**—Used to set the degrees of rotation around each axis from 0 to 360 degrees. The rotation values can be entered with up to 6 decimal places.
  - **X**—Rotates the scene along the X axis.
  - **Y**—Rotates the scene along the Y axis.
  - **Z**—Rotates the scene along the Z axis.
- **Position**—Used to set the position of the scene along the X, Y, and Z axes.
  - **X**—Positions the scene along the X axis.
  - **Y**—Positions the scene along the Y axis.
  - **Z**—Positions the scene along the Z axis.
- **Scale**—Used to scale the object along the X, Y, and Z axes.
  - **X**—Scales the scene along the X axis.
  - **Y**—Scales the scene along the Y axis.
  - **Z**—Scales the scene along the Z axis.

Pro/ENGINEER Assembly Import (.asm)

You can import and view Pro/ENGINEER Assembly (.asm) files.

For further information on using files, please see Opening Files **(on page 42)**, Importing Files (on page 43), and Saving Files (on page 56).

Support

- 2D vector data.
- Assembly hierarchy.
- Meshes.
- Parts data.
- Material and object names.
- Tessellation control.
- UV coordinates is supported when importing using the Legacy method.

Limitations

- Animation.
- BOM support based on part names.
- Configurations.
- Solids/NURBS.
- Textures.

Interface

Import Method—Used to establish the way in which to import the file.

- **Method**—The method in which the file is imported. Each method utilizes differing import options to import the file.
  - **Method A**—Imports the file using Method A.
  - **Legacy**—Imports the file using the Legacy method.

Method A—Used to establish the Method A settings.

- **Surface deviation** (on page 45)—Determines the maximum distance allowed between original analytical surface and its tessellated representation. Triangle edges do not deviate from edges of the face by more than this amount. The units are expressed as unit size based on those used by the model. A smaller surface deviation produces more triangles for smoother models.
- **Normal deviation** (on page 45)—Determines the maximum angular deviation (in degrees) allowed between a analytical surface and its triangulation. Pairs of triangles do not incorporate a dihedral angle greater than this amount. For example, this setting dictates the minimum number of facets around a smaller circle or cylinder regardless of the Surface Deviation setting. This parameter gives you added control over faces with very small radii. Lower values result in finer tessellations, while higher values give coarser tessellations.
- **Import hidden objects**—Imports all hidden objects. If, after importing a file, you modify any visible objects that contain hidden sub-objects after import, those hidden objects are also modified.
- **Display hidden objects**—Displays all hidden objects in the viewport after importing the file.
- **Import sheet bodies**—Imports all construction geometry. Sheet bodies are flat surfaces from which each object is cut.

  Note: If a file contains sheet bodies, this option must be selected for the file to be imported correctly.

- **Import wireframes**—Imports all wireframes if any exist.
- **Unit**—Used to select the unit type for which you want to view its custom unit (scene unit) measurement in meters. For example, 1 custom unit = 0.01 meters.
  - **File default**—Imports the file using the file's units.
  - **Millimeters**—Imports the file in millimeters (mm).
  - **Centimeters**—Imports the file in centimeters (cm).
  - **Meters**—Imports the file in meters (m).
  - **Inches**—Imports the file in inches (in).
  - **Feet**—Imports the file in feet (ft).
- **Ignore material opacity**—Disregards any material transparency that may have been set in the original file via an external application. That is, all the objects appear opaque. For example, a material opacity of 30% for an object is ignored, and the object is displayed with 100% opacity.
- **Auto-correct view orientation**—Attempts to correct the file's original view orientation to align with Deep Exploration's view orientation.
- **Import PMI** (on page 194)—Displays the Product Manufacturing Information (PMI) in the 3D Objects list and creates a camera for every model view found within the file. The cameras are created in a Model View folder for each object that has a model view. You can view the scene through one of these cameras.

Legacy—Used to establish the Legacy settings.

- **Default Tessellation** (on page 45)—Used to import the file using the default tessellation settings (arrangement and density of the polygons).

  Note: If you enter 0 (zero) for any of the tessellation settings, they are not taken into effect during the tessellation process.

  - **Tessellation**—Used to import the file using the level of tessellation.

Copyright © Right Hemisphere 2006. All Rights Reserved.

  - **Very high**—Displays a very high resolution using the values directly from the file. You are able to set custom values to give you a higher tessellation if a file has a very high polygon count. Note that using this option reduces processing speed.
  - **High**—Displays a high resolution with a high number of polygons. That is, the planer tolerance is set to the tessellation tolerance.
  - **Medium**—Displays a medium resolution with a medium number of polygons. That is, the planer tolerance is set to the tessellation tolerance and both are multiplied by 10.
  - **Low**—Displays a low resolution with a low number of polygons. That is, the planer tolerance is set to the tessellation tolerance and both are multiplied by 100. This option increases processing speed.
- **Custom Tessellation** (on page 45)—Used to customize the tessellation settings for all objects within the model. These settings are used when you triangulate (mesh) the faces/bodies of the model.

  Note: If you enter 0 (zero) for any of the tessellation settings, they are not taken into effect during the tessellation process.

  - **Angle tolerance**—The maximum angular deviation allowed between a face and its triangulation. Pairs of triangles do not incorporate a dihedral angle greater than this amount. This parameter gives a user added control over faces with very small radii. Lower values result in finer tessellations, while higher values give coarser tessellations.
  - **Planar tolerance**—The maximum distance allowed between a face and its triangulation for 3D solid objects. Triangle interiors do not deviate from the face interior by more than this amount.
  - **Tessellation tolerance**—The maximum distance allowed between an edge/curve and its tessellation. Triangle edges do not deviate from edges of the face by more than this amount, or by more than the maximum distance between the edge and the side of the facets along the edge when used in face triangulation.

  Tip: If you only want tessellation of edges/curves, enter values for the tessellation tolerance and angular tolerance.

  Note: Both planar and tessellation tolerance are considered in the units of the model being meshed. Therefore, they should be set to a similar value according to the model size to noticeably reduce the number of triangles generated. Model size/100 is a good starting point depending whether you want a fine or coarse mesh.

- **Display**—Used to display 2D vectors and 3D solids, or 3D solids only.
  - **2D vector and 3D solids**—Displays 2D vectors and 3D solids. Only the tessellation of 2D vectors is affected.
  - **3D solids**—Displays 3D solid objects only. As planar tolerance is for face triangulation of 3D solid objects only, this selection ensures planar tolerance affects the tessellation.
- **Tessellation**—Used to select the tessellation with which to import the file.
  - **Default**—Imports the file using the default tessellation settings.
  - **Custom**—Imports the file using the customized tessellation settings.

Geometry Transform (on page 44)—Used to transform (rotate, position, and scale) the scene along the X, Y, and Z axes.

- **Rotation**—Used to set the degrees of rotation around each axis from 0 to 360 degrees. The rotation values can be entered with up to 6 decimal places.
  - **X**—Rotates the scene along the X axis.
  - **Y**—Rotates the scene along the Y axis.
  - **Z**—Rotates the scene along the Z axis.
- **Position**—Used to set the position of the scene along the X, Y, and Z axes.

  - **X**—Positions the scene along the X axis.
  - **Y**—Positions the scene along the Y axis.
  - **Z**—Positions the scene along the Z axis.
- **Scale**—Used to scale the object along the X, Y, and Z axes.
  - **X**—Scales the scene along the X axis.
  - **Y**—Scales the scene along the Y axis.
  - **Z**—Scales the scene along the Z axis.

Copyright © Right Hemisphere 2006. All Rights Reserved.

Pro/ENGINEER Part Import (.prt*, .xpr)

You can import and view Pro/ENGINEER Part (.prt*, .xpr) files.

The import options differ depending on the version of Deep Exploration you have installed:

- Certain options are available with the CAD Edition of Deep Exploration.
- Certain options are available with the Standard Edition of Deep Exploration and the CoreCAD Module or Pro/E Module.

Note that support for the CAD format versions (on page 526) also differs depending on the version of Deep Exploration you have installed.

Import Rules

The following rules apply when importing Pro/E files:

- When a file is first opened with the Pro/E Module, a medium resolution is used by default for fast file loading, and a dialog displays these resolution settings.
- The latest version of any part file within the folder is always opened. For example, sprng.prt.3 is opened if the folder contains spring.prt.1, spring.prt.2 and spring.prt.3.
- Parts and sub-assemblies are added to the external files list.
- Sub-assembly hierarchy is added for all part files, if any.
- Pro/E searches through folders for part and assembly files and for corresponding accelerator files (on page 48):

1. The current directory of the file.
2. In the search paths specified in the CAD Modules tab (on page 227).

If a part, assembly or accelerator file is not found, a message is displayed next to the object in the Scene Components panel **(on page 266)** advising you of this.

Pro/ENGINEER Part CAD Edition Import

You can import and view Pro/ENGINEER Part (.prt*, .xpr) files using the import options delivered with the CAD Edition of Deep Exploration.

For further information on using files, please see Opening Files **(on page 42)**, Importing Files (on page 43), and Saving Files (on page 56).

Support

- 2D vector data.
- Assembly hierarchy.
- Meshes.
- Parts data.
- Material and object names.
- Tessellation control.

Limitations

- Animation.
- BOM support based on part names.
- Configurations.
- Solids/NURBS.

- Textures.
- UV coordinates.

Interface

Common—Used to establish the common settings including tessellation (arrangement and density of the polygons) settings. Note that if you enter 0 (zero) for any of the tessellation settings, they are not taken into effect during the tessellation process.

- **Surface deviation** (on page 45)—Determines the maximum distance allowed between original analytical surface and its tessellated representation. Triangle edges do not deviate from edges of the face by more than this amount. The units are expressed as unit size based on those used by the model. A smaller surface deviation produces more triangles for smoother models.
- **Normal deviation** (on page 45)—Determines the maximum angular deviation (in degrees) allowed between a analytical surface and its triangulation. Pairs of triangles do not incorporate a dihedral angle greater than this amount. For example, this setting dictates the minimum number of facets around a smaller circle or cylinder regardless of the Surface Deviation setting. This parameter gives you added control over faces with very small radii. Lower values result in finer tessellations, while higher values give coarser tessellations.
- **Import hidden objects**—Imports all hidden objects. If, after importing a file, you modify any visible objects that contain hidden sub-objects after import, those hidden objects are also modified.
- **Display hidden objects**—Displays all hidden objects in the viewport after importing the file.
- **Import sheet bodies**—Imports all construction geometry. Sheet bodies are flat surfaces from which each object is cut.

  Note: If a file contains sheet bodies, this option must be selected for the file to be imported correctly.

- **Import wireframes**—Imports all wireframes if any exist.
- **Unit**—Used to select the unit type for which you want to view its custom unit (scene unit) measurement in meters. For example, 1 custom unit = 0.01 meters.
  - **File default**—Imports the file using the file's units.
  - **Millimeters**—Imports the file in millimeters (mm).
  - **Centimeters**—Imports the file in centimeters (cm).
  - **Meters**—Imports the file in meters (m).
  - **Inches**—Imports the file in inches (in).
  - **Feet**—Imports the file in feet (ft).
- **Ignore material opacity**—Disregards any material transparency that may have been set in the original file via an external application. That is, all the objects appear opaque. For example, a material opacity of 30% for an object is ignored, and the object is displayed with 100% opacity.
- **Auto-correct view orientation**—Attempts to correct the file's original view orientation to align with Deep Exploration's view orientation.
- **Import PMI** (on page 194)—Displays the Product Manufacturing Information (PMI) in the 3D Objects list and creates a camera for every model view found within the file. The cameras are created in a Model View folder for each object that has a model view. You can view the scene through one of these cameras.

Geometry Transform (on page 44)—Used to transform (rotate, position, and scale) the scene along the X, Y, and Z axes.

- **Rotation**—Used to set the degrees of rotation around each axis from 0 to 360 degrees. The rotation values can be entered with up to 6 decimal places.
  - **X**—Rotates the scene along the X axis.
  - **Y**—Rotates the scene along the Y axis.

Copyright © Right Hemisphere 2006. All Rights Reserved.

  - **Z**—Rotates the scene along the Z axis.
- **Position**—Used to set the position of the scene along the X, Y, and Z axes.
  - **X**—Positions the scene along the X axis.
  - **Y**—Positions the scene along the Y axis.
  - **Z**—Positions the scene along the Z axis.
- **Scale**—Used to scale the object along the X, Y, and Z axes.
  - **X**—Scales the scene along the X axis.
  - **Y**—Scales the scene along the Y axis.
  - **Z**—Scales the scene along the Z axis.

Pro/ENGINEER Part Import (.prt*, .xpr)

You can import and view Pro/ENGINEER Part (.prt*, .xpr) files.

For further information on using files, please see Opening Files **(on page 42)**, Importing Files (on page 43), and Saving Files (on page 56).

Support

- 2D vector data.
- Assembly hierarchy.
- Meshes.
- Parts data.
- Material and object names.
- Tessellation control.
- UV coordinates is supported when importing using the Legacy method.

Limitations

- Animation.
- BOM support based on part names.
- Configurations.
- Solids/NURBS.
- Textures.

Interface

Import Method—Used to establish the way in which to import the file.

- **Method**—The method in which the file is imported. Each method utilizes differing import options to import the file.
  - **Method A**—Imports the file using Method A.
  - **Legacy**—Imports the file using the Legacy method.

Method A—Used to establish the Method A settings.

- **Surface deviation** (on page 45)—Determines the maximum distance allowed between original analytical surface and its tessellated representation. Triangle edges do not deviate from edges of the face by more than this amount. The units are expressed as unit size based on those used by the model. A smaller surface deviation produces more triangles for smoother models.

- **Normal deviation** (on page 45)—Determines the maximum angular deviation (in degrees) allowed between a analytical surface and its triangulation. Pairs of triangles do not incorporate a dihedral angle greater than this amount. For example, this setting dictates the minimum number of facets around a smaller circle or cylinder regardless of the Surface Deviation setting. This parameter gives you added control over faces with very small radii. Lower values result in finer tessellations, while higher values give coarser tessellations.
- **Import hidden objects**—Imports all hidden objects. If, after importing a file, you modify any visible objects that contain hidden sub-objects after import, those hidden objects are also modified.
- **Display hidden objects**—Displays all hidden objects in the viewport after importing the file.
- **Import sheet bodies**—Imports all construction geometry. Sheet bodies are flat surfaces from which each object is cut.

  Note: If a file contains sheet bodies, this option must be selected for the file to be imported correctly.

- **Import wireframes**—Imports all wireframes if any exist.
- **Unit**—Used to select the unit type for which you want to view its custom unit (scene unit) measurement in meters. For example, 1 custom unit = 0.01 meters.
  - **File default**—Imports the file using the file's units.
  - **Millimeters**—Imports the file in millimeters (mm).
  - **Centimeters**—Imports the file in centimeters (cm).
  - **Meters**—Imports the file in meters (m).
  - **Inches**—Imports the file in inches (in).
  - **Feet**—Imports the file in feet (ft).
- **Ignore material opacity**—Disregards any material transparency that may have been set in the original file via an external application. That is, all the objects appear opaque. For example, a material opacity of 30% for an object is ignored, and the object is displayed with 100% opacity.
- **Auto-correct view orientation**—Attempts to correct the file's original view orientation to align with Deep Exploration's view orientation.
- **Import PMI** (on page 194)—Displays the Product Manufacturing Information (PMI) in the 3D Objects list and creates a camera for every model view found within the file. The cameras are created in a Model View folder for each object that has a model view. You can view the scene through one of these cameras.

Legacy—Used to establish the Legacy settings.

- **Default Tessellation** (on page 45)—Used to import the file using the default tessellation settings (arrangement and density of the polygons).

  Note: If you enter 0 (zero) for any of the tessellation settings, they are not taken into effect during the tessellation process.

  - **Tessellation**—Used to import the file using the level of tessellation.
    - **Very high**—Displays a very high resolution using the values directly from the file. You are able to set custom values to give you a higher tessellation if a file has a very high polygon count. Note that using this option reduces processing speed.
    - **High**—Displays a high resolution with a high number of polygons. That is, the planer tolerance is set to the tessellation tolerance.
    - **Medium**—Displays a medium resolution with a medium number of polygons. That is, the planer tolerance is set to the tessellation tolerance and both are multiplied by 10.
    - **Low**—Displays a low resolution with a low number of polygons. That is, the planer tolerance is set to the tessellation tolerance and both are multiplied by 100. This option increases processing speed.

Copyright © Right Hemisphere 2006. All Rights Reserved.

- **Custom Tessellation** (on page 45)—Used to customize the tessellation settings for all objects within the model. These settings are used when you triangulate (mesh) the faces/bodies of the model.

  Note: If you enter 0 (zero) for any of the tessellation settings, they are not taken into effect during the tessellation process.

  - **Angle tolerance**—The maximum angular deviation allowed between a face and its triangulation. Pairs of triangles do not incorporate a dihedral angle greater than this amount. This parameter gives a user added control over faces with very small radii. Lower values result in finer tessellations, while higher values give coarser tessellations.
  - **Planar tolerance**—The maximum distance allowed between a face and its triangulation for 3D solid objects. Triangle interiors do not deviate from the face interior by more than this amount.
  - **Tessellation tolerance**—The maximum distance allowed between an edge/curve and its tessellation. Triangle edges do not deviate from edges of the face by more than this amount, or by more than the maximum distance between the edge and the side of the facets along the edge when used in face triangulation.

  Tip: If you only want tessellation of edges/curves, enter values for the tessellation tolerance and angular tolerance.

  Note: Both planar and tessellation tolerance are considered in the units of the model being meshed. Therefore, they should be set to a similar value according to the model size to noticeably reduce the number of triangles generated. Model size/100 is a good starting point depending whether you want a fine or coarse mesh.

- **Display**—Used to display 2D vectors and 3D solids, or 3D solids only.
  - **2D vector and 3D solids**—Displays 2D vectors and 3D solids. Only the tessellation of 2D vectors is affected.
  - **3D solids**—Displays 3D solid objects only. As planar tolerance is for face triangulation of 3D solid objects only, this selection ensures planar tolerance affects the tessellation.
- **Tessellation**—Used to select the tessellation with which to import the file.
  - **Default**—Imports the file using the default tessellation settings.
  - **Custom**—Imports the file using the customized tessellation settings.

Geometry Transform (on page 44)—Used to transform (rotate, position, and scale) the scene along the X, Y, and Z axes.

- **Rotation**—Used to set the degrees of rotation around each axis from 0 to 360 degrees. The rotation values can be entered with up to 6 decimal places.
  - **X**—Rotates the scene along the X axis.
  - **Y**—Rotates the scene along the Y axis.
  - **Z**—Rotates the scene along the Z axis.
- **Position**—Used to set the position of the scene along the X, Y, and Z axes.
  - **X**—Positions the scene along the X axis.
  - **Y**—Positions the scene along the Y axis.
  - **Z**—Positions the scene along the Z axis.
- **Scale**—Used to scale the object along the X, Y, and Z axes.
  - **X**—Scales the scene along the X axis.
  - **Y**—Scales the scene along the Y axis.
  - **Z**—Scales the scene along the Z axis.

PTC Pro/DESKTOP Import (.des)

You can import and view Product Development Company Pro/DESKTOP (.des) files using the import options delivered with the Standard Edition of Deep Exploration, the gPlug Module, and the Pro/E Module.

For further information on using files, please see Opening Files **(on page 42)**, Importing Files (on page 43), and Saving Files (on page 56).

Support

- 2D vector data.
- Assembly hierarchy.
- Meshes.
- Parts data.
- UV coordinates.
- Tessellation control.

Limitations

- Animation.
- Assembly data.
- BOM support based on part names.
- Configurations.
- Material attributes.
- Parts data.
- Solids/NURBS.
- Textures.

Interface

Legacy—Used to establish the Legacy settings.

- **Default Tessellation** (on page 45)—Used to import the file using the default tessellation settings (arrangement and density of the polygons).

  Note: If you enter 0 (zero) for any of the tessellation settings, they are not taken into effect during the tessellation process.

  - **Tessellation**—Used to import the file using the level of tessellation.
    - **Very high**—Displays a very high resolution using the values directly from the file. You are able to set custom values to give you a higher tessellation if a file has a very high polygon count. Note that using this option reduces processing speed.
    - **High**—Displays a high resolution with a high number of polygons. That is, the planer tolerance is set to the tessellation tolerance.
    - **Medium**—Displays a medium resolution with a medium number of polygons. That is, the planer tolerance is set to the tessellation tolerance and both are multiplied by 10.
    - **Low**—Displays a low resolution with a low number of polygons. That is, the planer tolerance is set to the tessellation tolerance and both are multiplied by 100. This option increases processing speed.

Copyright © Right Hemisphere 2006. All Rights Reserved.

- **Custom Tessellation** (on page 45)—Used to customize the tessellation settings for all objects within the model. These settings are used when you triangulate (mesh) the faces/bodies of the model.

  Note: If you enter 0 (zero) for any of the tessellation settings, they are not taken into effect during the tessellation process.

  - **Angle tolerance**—The maximum angular deviation allowed between a face and its triangulation. Pairs of triangles do not incorporate a dihedral angle greater than this amount. This parameter gives a user added control over faces with very small radii. Lower values result in finer tessellations, while higher values give coarser tessellations.
  - **Planar tolerance**—The maximum distance allowed between a face and its triangulation for 3D solid objects. Triangle interiors do not deviate from the face interior by more than this amount.
  - **Tessellation tolerance**—The maximum distance allowed between an edge/curve and its tessellation. Triangle edges do not deviate from edges of the face by more than this amount, or by more than the maximum distance between the edge and the side of the facets along the edge when used in face triangulation.

  Tip: If you only want tessellation of edges/curves, enter values for the tessellation tolerance and angular tolerance.

  Note: Both planar and tessellation tolerance are considered in the units of the model being meshed. Therefore, they should be set to a similar value according to the model size to noticeably reduce the number of triangles generated. Model size/100 is a good starting point depending whether you want a fine or coarse mesh.

- **Display**—Used to display 2D vectors and 3D solids, or 3D solids only.
  - **2D vector and 3D solids**—Displays 2D vectors and 3D solids. Only the tessellation of 2D vectors is affected.
  - **3D solids**—Displays 3D solid objects only. As planar tolerance is for face triangulation of 3D solid objects only, this selection ensures planar tolerance affects the tessellation.
- **Tessellation**—Used to select the tessellation with which to import the file.
  - **Default**—Imports the file using the default tessellation settings.
  - **Custom**—Imports the file using the customized tessellation settings.

Geometry Transform (on page 44)—Used to transform (rotate, position, and scale) the scene along the X, Y, and Z axes.

- **Rotation**—Used to set the degrees of rotation around each axis from 0 to 360 degrees. The rotation values can be entered with up to 6 decimal places.
  - **X**—Rotates the scene along the X axis.
  - **Y**—Rotates the scene along the Y axis.
  - **Z**—Rotates the scene along the Z axis.
- **Position**—Used to set the position of the scene along the X, Y, and Z axes.
  - **X**—Positions the scene along the X axis.
  - **Y**—Positions the scene along the Y axis.
  - **Z**—Positions the scene along the Z axis.
- **Scale**—Used to scale the object along the X, Y, and Z axes.
  - **X**—Scales the scene along the X axis.
  - **Y**—Scales the scene along the Y axis.
  - **Z**—Scales the scene along the Z axis.

Raindrop Geomagic 3D Modelling Import (.wrp)

You can import and view Raindrop Geomagic 3D Modelling (.wrp) files using the import options delivered with the Standard Edition of Deep Exploration, the gPlug Module, and the Pro/E Module.

For further information on using files, please see Opening Files **(on page 42)**, Importing Files (on page 43), and Saving Files (on page 56).

Support

- 2D vector data.
- Assembly hierarchy.
- Meshes.
- Parts data.
- UV coordinates.
- Tessellation control.

Limitations

- Animation.
- Assembly data.
- BOM support based on part names.
- Configurations.
- Material attributes.
- Parts data.
- Solids/NURBS.
- Textures.

Interface

Legacy—Used to establish the Legacy settings.

- **Default Tessellation** (on page 45)—Used to import the file using the default tessellation settings (arrangement and density of the polygons).

  Note: If you enter 0 (zero) for any of the tessellation settings, they are not taken into effect during the tessellation process.

  - **Tessellation**—Used to import the file using the level of tessellation.
    - **Very high**—Displays a very high resolution using the values directly from the file. You are able to set custom values to give you a higher tessellation if a file has a very high polygon count. Note that using this option reduces processing speed.
    - **High**—Displays a high resolution with a high number of polygons. That is, the planer tolerance is set to the tessellation tolerance.
    - **Medium**—Displays a medium resolution with a medium number of polygons. That is, the planer tolerance is set to the tessellation tolerance and both are multiplied by 10.
    - **Low**—Displays a low resolution with a low number of polygons. That is, the planer tolerance is set to the tessellation tolerance and both are multiplied by 100. This option increases processing speed.
- **Custom Tessellation** (on page 45)—Used to customize the tessellation settings for all objects within the model. These settings are used when you triangulate (mesh) the faces/bodies of the model.

Copyright © Right Hemisphere 2006. All Rights Reserved.

Note: If you enter 0 (zero) for any of the tessellation settings, they are not taken into effect during the tessellation process.

- **Angle tolerance**—The maximum angular deviation allowed between a face and its triangulation. Pairs of triangles do not incorporate a dihedral angle greater than this amount. This parameter gives a user added control over faces with very small radii. Lower values result in finer tessellations, while higher values give coarser tessellations.
- **Planar tolerance**—The maximum distance allowed between a face and its triangulation for 3D solid objects. Triangle interiors do not deviate from the face interior by more than this amount.
- **Tessellation tolerance**—The maximum distance allowed between an edge/curve and its tessellation. Triangle edges do not deviate from edges of the face by more than this amount, or by more than the maximum distance between the edge and the side of the facets along the edge when used in face triangulation.

Tip: If you only want tessellation of edges/curves, enter values for the tessellation tolerance and angular tolerance.

Note: Both planar and tessellation tolerance are considered in the units of the model being meshed. Therefore, they should be set to a similar value according to the model size to noticeably reduce the number of triangles generated. Model size/100 is a good starting point depending whether you want a fine or coarse mesh.

- **Display**—Used to display 2D vectors and 3D solids, or 3D solids only.
  - **2D vector and 3D solids**—Displays 2D vectors and 3D solids. Only the tessellation of 2D vectors is affected.
  - **3D solids**—Displays 3D solid objects only. As planar tolerance is for face triangulation of 3D solid objects only, this selection ensures planar tolerance affects the tessellation.
- **Tessellation**—Used to select the tessellation with which to import the file.
  - **Default**—Imports the file using the default tessellation settings.
  - **Custom**—Imports the file using the customized tessellation settings.

Geometry Transform (on page 44)—Used to transform (rotate, position, and scale) the scene along the X, Y, and Z axes.

- **Rotation**—Used to set the degrees of rotation around each axis from 0 to 360 degrees. The rotation values can be entered with up to 6 decimal places.
  - **X**—Rotates the scene along the X axis.
  - **Y**—Rotates the scene along the Y axis.
  - **Z**—Rotates the scene along the Z axis.
- **Position**—Used to set the position of the scene along the X, Y, and Z axes.
  - **X**—Positions the scene along the X axis.
  - **Y**—Positions the scene along the Y axis.
  - **Z**—Positions the scene along the Z axis.
- **Scale**—Used to scale the object along the X, Y, and Z axes.
  - **X**—Scales the scene along the X axis.
  - **Y**—Scales the scene along the Y axis.
  - **Z**—Scales the scene along the Z axis.

SDRC I-DEAS Model Import (.arc, .mf1)

You can import and view Structural Dynamics Research Corporation (SDRC) I-DEAS Model (.arc, .mf1) files.

For further information on using files, please see Opening Files **(on page 42)**, Importing Files (on page 43), and Saving Files (on page 56).

Support

- 'Active bin' configuration.
- Assembly hierarchy.
- BOM support based on part names.
- Meshes.
- Parts data.
- Material and object names.
- Tessellation control.

Limitations

- 2D vector data.
- Animation.
- Parts data.
- Solids/NURBS.
- Textures.
- UV coordinates.

Interface

Common—Used to establish the common settings including tessellation (arrangement and density of the polygons) settings. Note that if you enter 0 (zero) for any of the tessellation settings, they are not taken into effect during the tessellation process.

- **Surface deviation** (on page 45)—Determines the maximum distance allowed between original analytical surface and its tessellated representation. Triangle edges do not deviate from edges of the face by more than this amount. The units are expressed as unit size based on those used by the model. A smaller surface deviation produces more triangles for smoother models.
- **Normal deviation** (on page 45)—Determines the maximum angular deviation (in degrees) allowed between a analytical surface and its triangulation. Pairs of triangles do not incorporate a dihedral angle greater than this amount. For example, this setting dictates the minimum number of facets around a smaller circle or cylinder regardless of the Surface Deviation setting. This parameter gives you added control over faces with very small radii. Lower values result in finer tessellations, while higher values give coarser tessellations.
- **Import hidden objects**—Imports all hidden objects. If, after importing a file, you modify any visible objects that contain hidden sub-objects after import, those hidden objects are also modified.
- **Display hidden objects**—Displays all hidden objects in the viewport after importing the file.
- **Import sheet bodies**—Imports all construction geometry. Sheet bodies are flat surfaces from which each object is cut.

  Note: If a file contains sheet bodies, this option must be selected for the file to be imported correctly.

- **Import wireframes**—Imports all wireframes if any exist.

Copyright © Right Hemisphere 2006. All Rights Reserved.

- **Unit**—Used to select the unit type for which you want to view its custom unit (scene unit) measurement in meters. For example, 1 custom unit = 0.01 meters.
  - **File default**—Imports the file using the file's units.
  - **Millimeters**—Imports the file in millimeters (mm).
  - **Centimeters**—Imports the file in centimeters (cm).
  - **Meters**—Imports the file in meters (m).
  - **Inches**—Imports the file in inches (in).
  - **Feet**—Imports the file in feet (ft).
- **Ignore material opacity**—Disregards any material transparency that may have been set in the original file via an external application. That is, all the objects appear opaque. For example, a material opacity of 30% for an object is ignored, and the object is displayed with 100% opacity.
- **Auto-correct view orientation**—Attempts to correct the file's original view orientation to align with Deep Exploration's view orientation.
- **Import PMI** (on page 194)—Displays the Product Manufacturing Information (PMI) in the 3D Objects list and creates a camera for every model view found within the file. The cameras are created in a Model View folder for each object that has a model view. You can view the scene through one of these cameras.

Geometry Transform (on page 44)—Used to transform (rotate, position, and scale) the scene along the X, Y, and Z axes.

- **Rotation**—Used to set the degrees of rotation around each axis from 0 to 360 degrees. The rotation values can be entered with up to 6 decimal places.
  - **X**—Rotates the scene along the X axis.
  - **Y**—Rotates the scene along the Y axis.
  - **Z**—Rotates the scene along the Z axis.
- **Position**—Used to set the position of the scene along the X, Y, and Z axes.
  - **X**—Positions the scene along the X axis.
  - **Y**—Positions the scene along the Y axis.
  - **Z**—Positions the scene along the Z axis.
- **Scale**—Used to scale the object along the X, Y, and Z axes.
  - **X**—Scales the scene along the X axis.
  - **Y**—Scales the scene along the Y axis.
  - **Z**—Scales the scene along the Z axis.

SDRC I-DEAS Package Import (.pkg)

You can import and view Structural Dynamics Research Corporation (SDRC) I-DEAS Package (.pkg) files.

For further information on using files, please see Opening Files **(on page 42)**, Importing Files (on page 43), and Saving Files (on page 56).

Support

- 0th element in configuration.
- 'Active bin' configuration.
- Assembly hierarchy.
- BOM support based on part names.
- Meshes.
- Parts data.
- Material and object names.
- Tessellation control.

Limitations

- 2D vector data.
- Animation.
- Parts data.
- Solids/NURBS.
- Textures.
- UV coordinates.

Interface

Common—Used to establish the common settings including tessellation (arrangement and density of the polygons) settings. Note that if you enter 0 (zero) for any of the tessellation settings, they are not taken into effect during the tessellation process.

- **Surface deviation** (on page 45)—Determines the maximum distance allowed between original analytical surface and its tessellated representation. Triangle edges do not deviate from edges of the face by more than this amount. The units are expressed as unit size based on those used by the model. A smaller surface deviation produces more triangles for smoother models.
- **Normal deviation** (on page 45)—Determines the maximum angular deviation (in degrees) allowed between a analytical surface and its triangulation. Pairs of triangles do not incorporate a dihedral angle greater than this amount. For example, this setting dictates the minimum number of facets around a smaller circle or cylinder regardless of the Surface Deviation setting. This parameter gives you added control over faces with very small radii. Lower values result in finer tessellations, while higher values give coarser tessellations.
- **Import hidden objects**—Imports all hidden objects. If, after importing a file, you modify any visible objects that contain hidden sub-objects after import, those hidden objects are also modified.
- **Display hidden objects**—Displays all hidden objects in the viewport after importing the file.
- **Import sheet bodies**—Imports all construction geometry. Sheet bodies are flat surfaces from which each object is cut.

Note: If a file contains sheet bodies, this option must be selected for the file to be imported correctly.

Copyright © Right Hemisphere 2006. All Rights Reserved.

- **Import wireframes**—Imports all wireframes if any exist.
- **Unit**—Used to select the unit type for which you want to view its custom unit (scene unit) measurement in meters. For example, 1 custom unit = 0.01 meters.
  - **File default**—Imports the file using the file's units.
  - **Millimeters**—Imports the file in millimeters (mm).
  - **Centimeters**—Imports the file in centimeters (cm).
  - **Meters**—Imports the file in meters (m).
  - **Inches**—Imports the file in inches (in).
  - **Feet**—Imports the file in feet (ft).
- **Ignore material opacity**—Disregards any material transparency that may have been set in the original file via an external application. That is, all the objects appear opaque. For example, a material opacity of 30% for an object is ignored, and the object is displayed with 100% opacity.
- **Auto-correct view orientation**—Attempts to correct the file's original view orientation to align with Deep Exploration's view orientation.
- **Import PMI** (on page 194)—Displays the Product Manufacturing Information (PMI) in the 3D Objects list and creates a camera for every model view found within the file. The cameras are created in a Model View folder for each object that has a model view. You can view the scene through one of these cameras.

Geometry Transform (on page 44)—Used to transform (rotate, position, and scale) the scene along the X, Y, and Z axes.

- **Rotation**—Used to set the degrees of rotation around each axis from 0 to 360 degrees. The rotation values can be entered with up to 6 decimal places.
  - **X**—Rotates the scene along the X axis.
  - **Y**—Rotates the scene along the Y axis.
  - **Z**—Rotates the scene along the Z axis.
- **Position**—Used to set the position of the scene along the X, Y, and Z axes.
  - **X**—Positions the scene along the X axis.
  - **Y**—Positions the scene along the Y axis.
  - **Z**—Positions the scene along the Z axis.
- **Scale**—Used to scale the object along the X, Y, and Z axes.
  - **X**—Scales the scene along the X axis.
  - **Y**—Scales the scene along the Y axis.
  - **Z**—Scales the scene along the Z axis.

SDRC I-DEAS Universal Import (.unv)

You can import and view Structural Dynamics Research Corporation (SDRC) I-DEAS Universal (.unv) files.

For further information on using files, please see Opening Files **(on page 42)**, Importing Files (on page 43), and Saving Files (on page 56).

Support

- 'Active bin' configuration.
- Assembly hierarchy.
- BOM support based on part names.
- Meshes.
- Parts data.
- Material and object names.
- Tessellation control.

Limitations

- 2D vector data.
- Animation.
- Parts data.
- Solids/NURBS.
- Textures.
- UV coordinates.

Interface

Common—Used to establish the common settings including tessellation (arrangement and density of the polygons) settings. Note that if you enter 0 (zero) for any of the tessellation settings, they are not taken into effect during the tessellation process.

- **Surface deviation** (on page 45)—Determines the maximum distance allowed between original analytical surface and its tessellated representation. Triangle edges do not deviate from edges of the face by more than this amount. The units are expressed as unit size based on those used by the model. A smaller surface deviation produces more triangles for smoother models.
- **Normal deviation** (on page 45)—Determines the maximum angular deviation (in degrees) allowed between a analytical surface and its triangulation. Pairs of triangles do not incorporate a dihedral angle greater than this amount. For example, this setting dictates the minimum number of facets around a smaller circle or cylinder regardless of the Surface Deviation setting. This parameter gives you added control over faces with very small radii. Lower values result in finer tessellations, while higher values give coarser tessellations.
- **Import hidden objects**—Imports all hidden objects. If, after importing a file, you modify any visible objects that contain hidden sub-objects after import, those hidden objects are also modified.
- **Display hidden objects**—Displays all hidden objects in the viewport after importing the file.
- **Import sheet bodies**—Imports all construction geometry. Sheet bodies are flat surfaces from which each object is cut.

  Note: If a file contains sheet bodies, this option must be selected for the file to be imported correctly.

- **Import wireframes**—Imports all wireframes if any exist.

Copyright © Right Hemisphere 2006. All Rights Reserved.

- **Unit**—Used to select the unit type for which you want to view its custom unit (scene unit) measurement in meters. For example, 1 custom unit = 0.01 meters.
  - **File default**—Imports the file using the file's units.
  - **Millimeters**—Imports the file in millimeters (mm).
  - **Centimeters**—Imports the file in centimeters (cm).
  - **Meters**—Imports the file in meters (m).
  - **Inches**—Imports the file in inches (in).
  - **Feet**—Imports the file in feet (ft).
- **Ignore material opacity**—Disregards any material transparency that may have been set in the original file via an external application. That is, all the objects appear opaque. For example, a material opacity of 30% for an object is ignored, and the object is displayed with 100% opacity.
- **Auto-correct view orientation**—Attempts to correct the file's original view orientation to align with Deep Exploration's view orientation.
- **Import PMI** (on page 194)—Displays the Product Manufacturing Information (PMI) in the 3D Objects list and creates a camera for every model view found within the file. The cameras are created in a Model View folder for each object that has a model view. You can view the scene through one of these cameras.

Geometry Transform (on page 44)—Used to transform (rotate, position, and scale) the scene along the X, Y, and Z axes.

- **Rotation**—Used to set the degrees of rotation around each axis from 0 to 360 degrees. The rotation values can be entered with up to 6 decimal places.
  - **X**—Rotates the scene along the X axis.
  - **Y**—Rotates the scene along the Y axis.
  - **Z**—Rotates the scene along the Z axis.
- **Position**—Used to set the position of the scene along the X, Y, and Z axes.
  - **X**—Positions the scene along the X axis.
  - **Y**—Positions the scene along the Y axis.
  - **Z**—Positions the scene along the Z axis.
- **Scale**—Used to scale the object along the X, Y, and Z axes.
  - **X**—Scales the scene along the X axis.
  - **Y**—Scales the scene along the Y axis.
  - **Z**—Scales the scene along the Z axis.

SolidEdge 3D CAD Model Part Import (.par)

You can import and view SolidEdge 3D CAD Model Part (.par) files.

For further information on using files, please see Opening Files **(on page 42)**, Importing Files (on page 43), and Saving Files (on page 56).

Support

- Assembly hierarchy.
- Meshes.
- Parts data.
- Material and object names.

Limitations

- 2D vector data.
- Animation.
- BOM support based on part names.
- Configurations.
- Solids/NURBS.
- Tessellation control.
- Textures.
- UV coordinates.

Interface

Common—Used to establish the common settings including tessellation (arrangement and density of the polygons) settings. Note that if you enter 0 (zero) for any of the tessellation settings, they are not taken into effect during the tessellation process.

- **Surface deviation** (on page 45)—Determines the maximum distance allowed between original analytical surface and its tessellated representation. Triangle edges do not deviate from edges of the face by more than this amount. The units are expressed as unit size based on those used by the model. A smaller surface deviation produces more triangles for smoother models.
- **Normal deviation** (on page 45)—Determines the maximum angular deviation (in degrees) allowed between a analytical surface and its triangulation. Pairs of triangles do not incorporate a dihedral angle greater than this amount. For example, this setting dictates the minimum number of facets around a smaller circle or cylinder regardless of the Surface Deviation setting. This parameter gives you added control over faces with very small radii. Lower values result in finer tessellations, while higher values give coarser tessellations.
- **Import hidden objects**—Imports all hidden objects. If, after importing a file, you modify any visible objects that contain hidden sub-objects after import, those hidden objects are also modified.
- **Display hidden objects**—Displays all hidden objects in the viewport after importing the file.
- **Import sheet bodies**—Imports all construction geometry. Sheet bodies are flat surfaces from which each object is cut.

  Note: If a file contains sheet bodies, this option must be selected for the file to be imported correctly.

- **Import wireframes**—Imports all wireframes if any exist.
- **Unit**—Used to select the unit type for which you want to view its custom unit (scene unit) measurement in meters. For example, 1 custom unit = 0.01 meters.

Copyright © Right Hemisphere 2006. All Rights Reserved.

  - **File default**—Imports the file using the file's units.
  - **Millimeters**—Imports the file in millimeters (mm).
  - **Centimeters**—Imports the file in centimeters (cm).
  - **Meters**—Imports the file in meters (m).
  - **Inches**—Imports the file in inches (in).
  - **Feet**—Imports the file in feet (ft).
- **Ignore material opacity**—Disregards any material transparency that may have been set in the original file via an external application. That is, all the objects appear opaque. For example, a material opacity of 30% for an object is ignored, and the object is displayed with 100% opacity.
- **Auto-correct view orientation**—Attempts to correct the file's original view orientation to align with Deep Exploration's view orientation.
- **Import PMI** (on page 194)—Displays the Product Manufacturing Information (PMI) in the 3D Objects list and creates a camera for every model view found within the file. The cameras are created in a Model View folder for each object that has a model view. You can view the scene through one of these cameras.

Geometry Transform (on page 44)—Used to transform (rotate, position, and scale) the scene along the X, Y, and Z axes.

- **Rotation**—Used to set the degrees of rotation around each axis from 0 to 360 degrees. The rotation values can be entered with up to 6 decimal places.
  - **X**—Rotates the scene along the X axis.
  - **Y**—Rotates the scene along the Y axis.
  - **Z**—Rotates the scene along the Z axis.
- **Position**—Used to set the position of the scene along the X, Y, and Z axes.
  - **X**—Positions the scene along the X axis.
  - **Y**—Positions the scene along the Y axis.
  - **Z**—Positions the scene along the Z axis.
- **Scale**—Used to scale the object along the X, Y, and Z axes.
  - **X**—Scales the scene along the X axis.
  - **Y**—Scales the scene along the Y axis.
  - **Z**—Scales the scene along the Z axis.

SolidWorks Assembly and Part Import (.sldasm, .sldlfp, .sldprt)

You can import and view SolidWorks Assembly (.sldasm) and Part (.sldlfp, .sldprt) files.

The .sldasm format displays list assembly data. The .sldlfp and .sldprt formats display list part data.

For further information on using files, please see Opening Files **(on page 42)**, Importing Files (on page 43), and Saving Files (on page 56).

Support

- Assembly hierarchy.
- Meshes.
- Parts data.
- Material and object names.

Limitations

- 2D vector data.
- Animation.
- BOM support based on part names.
- Configurations.
- Solids/NURBS.
- Tessellation control.
- Textures.
- UV coordinates.

Interface

Common—Used to establish the common settings including tessellation (arrangement and density of the polygons) settings. Note that if you enter 0 (zero) for any of the tessellation settings, they are not taken into effect during the tessellation process.

- **Surface deviation** (on page 45)—Determines the maximum distance allowed between original analytical surface and its tessellated representation. Triangle edges do not deviate from edges of the face by more than this amount. The units are expressed as unit size based on those used by the model. A smaller surface deviation produces more triangles for smoother models.
- **Normal deviation** (on page 45)—Determines the maximum angular deviation (in degrees) allowed between a analytical surface and its triangulation. Pairs of triangles do not incorporate a dihedral angle greater than this amount. For example, this setting dictates the minimum number of facets around a smaller circle or cylinder regardless of the Surface Deviation setting. This parameter gives you added control over faces with very small radii. Lower values result in finer tessellations, while higher values give coarser tessellations.
- **Import hidden objects**—Imports all hidden objects. If, after importing a file, you modify any visible objects that contain hidden sub-objects after import, those hidden objects are also modified.
- **Display hidden objects**—Displays all hidden objects in the viewport after importing the file.
- **Import sheet bodies**—Imports all construction geometry. Sheet bodies are flat surfaces from which each object is cut.

  Note: If a file contains sheet bodies, this option must be selected for the file to be imported correctly.

- **Import wireframes**—Imports all wireframes if any exist.

Copyright © Right Hemisphere 2006. All Rights Reserved.

- **Unit**—Used to select the unit type for which you want to view its custom unit (scene unit) measurement in meters. For example, 1 custom unit = 0.01 meters.
  - **File default**—Imports the file using the file's units.
  - **Millimeters**—Imports the file in millimeters (mm).
  - **Centimeters**—Imports the file in centimeters (cm).
  - **Meters**—Imports the file in meters (m).
  - **Inches**—Imports the file in inches (in).
  - **Feet**—Imports the file in feet (ft).
- **Ignore material opacity**—Disregards any material transparency that may have been set in the original file via an external application. That is, all the objects appear opaque. For example, a material opacity of 30% for an object is ignored, and the object is displayed with 100% opacity.
- **Auto-correct view orientation**—Attempts to correct the file's original view orientation to align with Deep Exploration's view orientation.
- **Import PMI** (on page 194)—Displays the Product Manufacturing Information (PMI) in the 3D Objects list and creates a camera for every model view found within the file. The cameras are created in a Model View folder for each object that has a model view. You can view the scene through one of these cameras.

Import Method—Used to establish the way in which to import the file.

- **Method**—The method in which the file is imported. Each method utilizes differing import options to import the file.
  - **Method A**—Imports the file using Method A.
  - **Legacy**—Imports the file using the Legacy method.

Geometry Transform (on page 44)—Used to transform (rotate, position, and scale) the scene along the X, Y, and Z axes.

- **Rotation**—Used to set the degrees of rotation around each axis from 0 to 360 degrees. The rotation values can be entered with up to 6 decimal places.
  - **X**—Rotates the scene along the X axis.
  - **Y**—Rotates the scene along the Y axis.
  - **Z**—Rotates the scene along the Z axis.
- **Position**—Used to set the position of the scene along the X, Y, and Z axes.
  - **X**—Positions the scene along the X axis.
  - **Y**—Positions the scene along the Y axis.
  - **Z**—Positions the scene along the Z axis.
- **Scale**—Used to scale the object along the X, Y, and Z axes.
  - **X**—Scales the scene along the X axis.
  - **Y**—Scales the scene along the Y axis.
  - **Z**—Scales the scene along the Z axis.

Standard ACIS Text Import (.sat)

You can import and view Standard ACIS Text (.sat) files.

The .sat file format (SAT) is the published format of ACIS by Spatial Technology. The SAT-format is used by different CAD/CAM-applications such as CADKEY, AutoCAD, and IronCAD.

The import options differ depending on the version of Deep Exploration you have installed:

- Certain options are available with the CAD Edition of Deep Exploration.
- Certain options are available with the Standard Edition of Deep Exploration and the CoreCAD Module or Pro/E Module.

Note that support for the CAD format versions (on page 526) also differs depending on the version of Deep Exploration you have installed.

Import Rules

The following rules apply when importing Pro/E files:

- When a file is first opened with the Pro/E Module, a medium resolution is used by default for fast file loading, and a dialog displays these resolution settings.
- The latest version of any part file within the folder is always opened. For example, sprng.prt.3 is opened if the folder contains spring.prt.1, spring.prt.2 and spring.prt.3.
- Parts and sub-assemblies are added to the external files list.
- Sub-assembly hierarchy is added for all part files, if any.
- Pro/E searches through folders for part and assembly files and for corresponding accelerator files (on page 48):

1. The current directory of the file.
2. In the search paths specified in the CAD Modules tab (on page 227).

If a part, assembly or accelerator file is not found, a message is displayed next to the object in the Scene Components panel **(on page 266)** advising you of this.

Standard ACIS Text CAD Edition Import

You can import and view Standard ACIS Text (.sat) files using the import options delivered with the CAD Edition of Deep Exploration.

For further information on using files, please see Opening Files **(on page 42)**, Importing Files (on page 43), and Saving Files (on page 56).

Support

- Assembly hierarchy.
- Meshes.
- Parts data.
- Material and object names.

Limitations

- 2D vector data.
- Animation.
- BOM support based on part names.
- Configurations.

Copyright © Right Hemisphere 2006. All Rights Reserved.

- Solids/NURBS.
- Tessellation control.
- Textures.
- UV coordinates.

Interface

Common—Used to establish the common settings including tessellation (arrangement and density of the polygons) settings. Note that if you enter 0 (zero) for any of the tessellation settings, they are not taken into effect during the tessellation process.

- **Surface deviation** (on page 45)—Determines the maximum distance allowed between original analytical surface and its tessellated representation. Triangle edges do not deviate from edges of the face by more than this amount. The units are expressed as unit size based on those used by the model. A smaller surface deviation produces more triangles for smoother models.
- **Normal deviation** (on page 45)—Determines the maximum angular deviation (in degrees) allowed between a analytical surface and its triangulation. Pairs of triangles do not incorporate a dihedral angle greater than this amount. For example, this setting dictates the minimum number of facets around a smaller circle or cylinder regardless of the Surface Deviation setting. This parameter gives you added control over faces with very small radii. Lower values result in finer tessellations, while higher values give coarser tessellations.
- **Import hidden objects**—Imports all hidden objects. If, after importing a file, you modify any visible objects that contain hidden sub-objects after import, those hidden objects are also modified.
- **Display hidden objects**—Displays all hidden objects in the viewport after importing the file.
- **Import sheet bodies**—Imports all construction geometry. Sheet bodies are flat surfaces from which each object is cut.

  Note: If a file contains sheet bodies, this option must be selected for the file to be imported correctly.

- **Import wireframes**—Imports all wireframes if any exist.
- **Unit**—Used to select the unit type for which you want to view its custom unit (scene unit) measurement in meters. For example, 1 custom unit = 0.01 meters.
  - **File default**—Imports the file using the file's units.
  - **Millimeters**—Imports the file in millimeters (mm).
  - **Centimeters**—Imports the file in centimeters (cm).
  - **Meters**—Imports the file in meters (m).
  - **Inches**—Imports the file in inches (in).
  - **Feet**—Imports the file in feet (ft).
- **Ignore material opacity**—Disregards any material transparency that may have been set in the original file via an external application. That is, all the objects appear opaque. For example, a material opacity of 30% for an object is ignored, and the object is displayed with 100% opacity.
- **Auto-correct view orientation**—Attempts to correct the file's original view orientation to align with Deep Exploration's view orientation.

Geometry Transform (on page 44)—Used to transform (rotate, position, and scale) the scene along the X, Y, and Z axes.

- **Rotation**—Used to set the degrees of rotation around each axis from 0 to 360 degrees. The rotation values can be entered with up to 6 decimal places.
  - **X**—Rotates the scene along the X axis.
  - **Y**—Rotates the scene along the Y axis.
  - **Z**—Rotates the scene along the Z axis.

- **Position**—Used to set the position of the scene along the X, Y, and Z axes.
  - **X**—Positions the scene along the X axis.
  - **Y**—Positions the scene along the Y axis.
  - **Z**—Positions the scene along the Z axis.
- **Scale**—Used to scale the object along the X, Y, and Z axes.
  - **X**—Scales the scene along the X axis.
  - **Y**—Scales the scene along the Y axis.
  - **Z**—Scales the scene along the Z axis.

Standard ACIS Text Import (.sat)

You can import and view Standard ACIS Text (.sat) files.

The .sat file format (SAT) is the published format of ACIS by Spatial Technology. The SAT-format is used by different CAD/CAM-applications such as CADKEY, AutoCAD, and IronCAD.

For further information on using files, please see Opening Files **(on page 42)**, Importing Files (on page 43), and Saving Files (on page 56).

Support

- 2D vector data when importing with the Pro/E Module.
- Assembly hierarchy.
- Meshes.
- Parts data.
- Material and object names.
- Tessellation control is supported when importing using Method A.
- UV coordinates are supported when importing with the Pro/E Module using the Legacy method.

Limitations

- Animation.
- BOM support based on part names.
- Configurations.
- Solids/NURBS.
- Textures.

Interface

Import Method—Used to establish the way in which to import the file.

- **Method**—The method in which the file is imported. Each method utilizes differing import options to import the file.
  - **Method A**—Imports the file using Method A.
  - **Legacy**—Imports the file using the Legacy method.

Method A—Used to establish the Method A settings.

- **Surface deviation** (on page 45)—Determines the maximum distance allowed between original analytical surface and its tessellated representation. Triangle edges do not deviate from edges of the face by more than this amount. The units are expressed as unit size based on those used by the model. A smaller surface deviation produces more triangles for smoother models.

Copyright © Right Hemisphere 2006. All Rights Reserved.

- **Normal deviation** (on page 45)—Determines the maximum angular deviation (in degrees) allowed between a analytical surface and its triangulation. Pairs of triangles do not incorporate a dihedral angle greater than this amount. For example, this setting dictates the minimum number of facets around a smaller circle or cylinder regardless of the Surface Deviation setting. This parameter gives you added control over faces with very small radii. Lower values result in finer tessellations, while higher values give coarser tessellations.
- **Import hidden objects**—Imports all hidden objects. If, after importing a file, you modify any visible objects that contain hidden sub-objects after import, those hidden objects are also modified.
- **Display hidden objects**—Displays all hidden objects in the viewport after importing the file.
- **Import sheet bodies**—Imports all construction geometry. Sheet bodies are flat surfaces from which each object is cut.

  Note: If a file contains sheet bodies, this option must be selected for the file to be imported correctly.

- **Import wireframes**—Imports all wireframes if any exist.
- **Unit**—Used to select the unit type for which you want to view its custom unit (scene unit) measurement in meters. For example, 1 custom unit = 0.01 meters.
  - **File default**—Imports the file using the file's units.
  - **Millimeters**—Imports the file in millimeters (mm).
  - **Centimeters**—Imports the file in centimeters (cm).
  - **Meters**—Imports the file in meters (m).
  - **Inches**—Imports the file in inches (in).
  - **Feet**—Imports the file in feet (ft).
- **Ignore material opacity**—Disregards any material transparency that may have been set in the original file via an external application. That is, all the objects appear opaque. For example, a material opacity of 30% for an object is ignored, and the object is displayed with 100% opacity.
- **Auto-correct view orientation**—Attempts to correct the file's original view orientation to align with Deep Exploration's view orientation.
- **Import PMI** (on page 194)—Displays the Product Manufacturing Information (PMI) in the 3D Objects list and creates a camera for every model view found within the file. The cameras are created in a Model View folder for each object that has a model view. You can view the scene through one of these cameras.

Legacy—Used to establish the Legacy settings.

- **Default Tessellation** (on page 45)—Used to import the file using the default tessellation settings (arrangement and density of the polygons).

  Note: If you enter 0 (zero) for any of the tessellation settings, they are not taken into effect during the tessellation process.

  - **Tessellation**—Used to import the file using the level of tessellation.
    - **Very high**—Displays a very high resolution using the values directly from the file. You are able to set custom values to give you a higher tessellation if a file has a very high polygon count. Note that using this option reduces processing speed.
    - **High**—Displays a high resolution with a high number of polygons. That is, the planer tolerance is set to the tessellation tolerance.
    - **Medium**—Displays a medium resolution with a medium number of polygons. That is, the planer tolerance is set to the tessellation tolerance and both are multiplied by 10.
    - **Low**—Displays a low resolution with a low number of polygons. That is, the planer tolerance is set to the tessellation tolerance and both are multiplied by 100. This option increases processing speed.

- **Custom Tessellation** (on page 45)—Used to customize the tessellation settings for all objects within the model. These settings are used when you triangulate (mesh) the faces/bodies of the model.

  Note: If you enter 0 (zero) for any of the tessellation settings, they are not taken into effect during the tessellation process.

  - **Angle tolerance**—The maximum angular deviation allowed between a face and its triangulation. Pairs of triangles do not incorporate a dihedral angle greater than this amount. This parameter gives a user added control over faces with very small radii. Lower values result in finer tessellations, while higher values give coarser tessellations.
  - **Planar tolerance**—The maximum distance allowed between a face and its triangulation for 3D solid objects. Triangle interiors do not deviate from the face interior by more than this amount.
  - **Tessellation tolerance**—The maximum distance allowed between an edge/curve and its tessellation. Triangle edges do not deviate from edges of the face by more than this amount, or by more than the maximum distance between the edge and the side of the facets along the edge when used in face triangulation.

  Tip: If you only want tessellation of edges/curves, enter values for the tessellation tolerance and angular tolerance.

  Note: Both planar and tessellation tolerance are considered in the units of the model being meshed. Therefore, they should be set to a similar value according to the model size to noticeably reduce the number of triangles generated. Model size/100 is a good starting point depending whether you want a fine or coarse mesh.

- **Display**—Used to display 2D vectors and 3D solids, or 3D solids only.
  - **2D vector and 3D solids**—Displays 2D vectors and 3D solids. Only the tessellation of 2D vectors is affected.
  - **3D solids**—Displays 3D solid objects only. As planar tolerance is for face triangulation of 3D solid objects only, this selection ensures planar tolerance affects the tessellation.
- **Tessellation**—Used to select the tessellation with which to import the file.
  - **Default**—Imports the file using the default tessellation settings.
  - **Custom**—Imports the file using the customized tessellation settings.

Geometry Transform (on page 44)—Used to transform (rotate, position, and scale) the scene along the X, Y, and Z axes.

- **Rotation**—Used to set the degrees of rotation around each axis from 0 to 360 degrees. The rotation values can be entered with up to 6 decimal places.
  - **X**—Rotates the scene along the X axis.
  - **Y**—Rotates the scene along the Y axis.
  - **Z**—Rotates the scene along the Z axis.
- **Position**—Used to set the position of the scene along the X, Y, and Z axes.
  - **X**—Positions the scene along the X axis.
  - **Y**—Positions the scene along the Y axis.
  - **Z**—Positions the scene along the Z axis.
- **Scale**—Used to scale the object along the X, Y, and Z axes.
  - **X**—Scales the scene along the X axis.
  - **Y**—Scales the scene along the Y axis.
  - **Z**—Scales the scene along the Z axis.

Copyright © Right Hemisphere 2006. All Rights Reserved.

STEP Files Import (.step, .stp)

You can import and view STEP (Standard for the Exchange of Product Model Data (.step, .stp) files.

The .step file format is the ISO standard for exchange of Product Data. It covers much more than part geometry exchange and is used for bill of material, simulation data, and configuration management. STEP is based on the language Express that allows very strict specifications.

The import options differ depending on the version of Deep Exploration you have installed:

- Certain options are available with the CAD Edition of Deep Exploration.
- Certain options are available with the Standard Edition of Deep Exploration and the CoreCAD Module or Pro/E Module.

Note that support for the CAD format versions (on page 526) also differs depending on the version of Deep Exploration you have installed.

Import Rules

The following rules apply when importing Pro/E files:

- When a file is first opened with the Pro/E Module, a medium resolution is used by default for fast file loading, and a dialog displays these resolution settings.
- The latest version of any part file within the folder is always opened. For example, sprng.prt.3 is opened if the folder contains spring.prt.1, spring.prt.2 and spring.prt.3.
- Parts and sub-assemblies are added to the external files list.
- Sub-assembly hierarchy is added for all part files, if any.
- Pro/E searches through folders for part and assembly files and for corresponding accelerator files (on page 48):

1. The current directory of the file.
2. In the search paths specified in the CAD Modules tab (on page 227).

If a part, assembly or accelerator file is not found, a message is displayed next to the object in the Scene Components panel **(on page 266)** advising you of this.

STEP Files CAD Edition Import

You can import and view STEP (Standard for the Exchange of Product Model Data (.step, .stp) files using the import options delivered with the CAD Edition of Deep Exploration.

For further information on using files, please see Opening Files **(on page 42)**, Importing Files (on page 43), and Saving Files (on page 56).

Support

- Assembly hierarchy.
- Meshes.
- Parts data.
- Material and object names.

Limitations

- 2D vector data.
- Animation.
- BOM support based on part names.
- Configurations.

- Solids/NURBS.
- Tessellation control.
- Textures.
- UV coordinates.

Interface

Common—Used to establish the common settings including tessellation (arrangement and density of the polygons) settings. Note that if you enter 0 (zero) for any of the tessellation settings, they are not taken into effect during the tessellation process.

- **Surface deviation** (on page 45)—Determines the maximum distance allowed between original analytical surface and its tessellated representation. Triangle edges do not deviate from edges of the face by more than this amount. The units are expressed as unit size based on those used by the model. A smaller surface deviation produces more triangles for smoother models.
- **Normal deviation** (on page 45)—Determines the maximum angular deviation (in degrees) allowed between a analytical surface and its triangulation. Pairs of triangles do not incorporate a dihedral angle greater than this amount. For example, this setting dictates the minimum number of facets around a smaller circle or cylinder regardless of the Surface Deviation setting. This parameter gives you added control over faces with very small radii. Lower values result in finer tessellations, while higher values give coarser tessellations.
- **Import hidden objects**—Imports all hidden objects. If, after importing a file, you modify any visible objects that contain hidden sub-objects after import, those hidden objects are also modified.
- **Display hidden objects**—Displays all hidden objects in the viewport after importing the file.
- **Import sheet bodies**—Imports all construction geometry. Sheet bodies are flat surfaces from which each object is cut.

  Note: If a file contains sheet bodies, this option must be selected for the file to be imported correctly.

- **Import wireframes**—Imports all wireframes if any exist.
- **Unit**—Used to select the unit type for which you want to view its custom unit (scene unit) measurement in meters. For example, 1 custom unit = 0.01 meters.
  - **File default**—Imports the file using the file's units.
  - **Millimeters**—Imports the file in millimeters (mm).
  - **Centimeters**—Imports the file in centimeters (cm).
  - **Meters**—Imports the file in meters (m).
  - **Inches**—Imports the file in inches (in).
  - **Feet**—Imports the file in feet (ft).
- **Ignore material opacity**—Disregards any material transparency that may have been set in the original file via an external application. That is, all the objects appear opaque. For example, a material opacity of 30% for an object is ignored, and the object is displayed with 100% opacity.
- **Auto-correct view orientation**—Attempts to correct the file's original view orientation to align with Deep Exploration's view orientation.

Geometry Transform (on page 44)—Used to transform (rotate, position, and scale) the scene along the X, Y, and Z axes.

- **Rotation**—Used to set the degrees of rotation around each axis from 0 to 360 degrees. The rotation values can be entered with up to 6 decimal places.
  - **X**—Rotates the scene along the X axis.
  - **Y**—Rotates the scene along the Y axis.
  - **Z**—Rotates the scene along the Z axis.

Copyright © Right Hemisphere 2006. All Rights Reserved.

- **Position**—Used to set the position of the scene along the X, Y, and Z axes.
  - **X**—Positions the scene along the X axis.
  - **Y**—Positions the scene along the Y axis.
  - **Z**—Positions the scene along the Z axis.
- **Scale**—Used to scale the object along the X, Y, and Z axes.
  - **X**—Scales the scene along the X axis.
  - **Y**—Scales the scene along the Y axis.
  - **Z**—Scales the scene along the Z axis.

STEP Files Import (.step, .stp)

You can import and view STEP (Standard for the Exchange of Product Model Data (.step, .stp) files.

The .step file format is the ISO standard for exchange of Product Data. It covers much more than part geometry exchange and is used for bill of material, simulation data, and configuration management. STEP is based on the language Express that allows very strict specifications.

For further information on using files, please see Opening Files **(on page 42)**, Importing Files (on page 43), and Saving Files (on page 56).

Support

- 2D vector data when importing with the Pro/E Module.
- Assembly hierarchy.
- Meshes.
- Parts data.
- Material and object names.
- Tessellation control is supported when importing using Method A.
- UV coordinates are supported when importing with the Pro/E Module using the Legacy method.

Limitations

- Animation.
- BOM support based on part names.
- Configurations.
- Solids/NURBS.
- Textures.

Interface

Import Method—Used to establish the way in which to import the file.

- **Method**—The method in which the file is imported. Each method utilizes differing import options to import the file.
  - **Method A**—Imports the file using Method A.
  - **Legacy**—Imports the file using the Legacy method.

Method A—Used to establish the Method A settings.

- **Surface deviation** (on page 45)—Determines the maximum distance allowed between original analytical surface and its tessellated representation. Triangle edges do not deviate from edges of the face by more than this amount. The units are expressed as unit size based on those used by the model. A smaller surface deviation produces more triangles for smoother models.

- **Normal deviation** (on page 45)—Determines the maximum angular deviation (in degrees) allowed between a analytical surface and its triangulation. Pairs of triangles do not incorporate a dihedral angle greater than this amount. For example, this setting dictates the minimum number of facets around a smaller circle or cylinder regardless of the Surface Deviation setting. This parameter gives you added control over faces with very small radii. Lower values result in finer tessellations, while higher values give coarser tessellations.
- **Import hidden objects**—Imports all hidden objects. If, after importing a file, you modify any visible objects that contain hidden sub-objects after import, those hidden objects are also modified.
- **Display hidden objects**—Displays all hidden objects in the viewport after importing the file.
- **Import sheet bodies**—Imports all construction geometry. Sheet bodies are flat surfaces from which each object is cut.

  Note: If a file contains sheet bodies, this option must be selected for the file to be imported correctly.

- **Import wireframes**—Imports all wireframes if any exist.
- **Unit**—Used to select the unit type for which you want to view its custom unit (scene unit) measurement in meters. For example, 1 custom unit = 0.01 meters.
  - **File default**—Imports the file using the file's units.
  - **Millimeters**—Imports the file in millimeters (mm).
  - **Centimeters**—Imports the file in centimeters (cm).
  - **Meters**—Imports the file in meters (m).
  - **Inches**—Imports the file in inches (in).
  - **Feet**—Imports the file in feet (ft).
- **Ignore material opacity**—Disregards any material transparency that may have been set in the original file via an external application. That is, all the objects appear opaque. For example, a material opacity of 30% for an object is ignored, and the object is displayed with 100% opacity.
- **Auto-correct view orientation**—Attempts to correct the file's original view orientation to align with Deep Exploration's view orientation.
- **Import PMI** (on page 194)—Displays the Product Manufacturing Information (PMI) in the 3D Objects list and creates a camera for every model view found within the file. The cameras are created in a Model View folder for each object that has a model view. You can view the scene through one of these cameras.

Legacy—Used to establish the Legacy settings.

- **Default Tessellation** (on page 45)—Used to import the file using the default tessellation settings (arrangement and density of the polygons).

  Note: If you enter 0 (zero) for any of the tessellation settings, they are not taken into effect during the tessellation process.

  - **Tessellation**—Used to import the file using the level of tessellation.
    - **Very high**—Displays a very high resolution using the values directly from the file. You are able to set custom values to give you a higher tessellation if a file has a very high polygon count. Note that using this option reduces processing speed.
    - **High**—Displays a high resolution with a high number of polygons. That is, the planer tolerance is set to the tessellation tolerance.
    - **Medium**—Displays a medium resolution with a medium number of polygons. That is, the planer tolerance is set to the tessellation tolerance and both are multiplied by 10.
    - **Low**—Displays a low resolution with a low number of polygons. That is, the planer tolerance is set to the tessellation tolerance and both are multiplied by 100. This option increases processing speed.

Copyright © Right Hemisphere 2006. All Rights Reserved.

- **Custom Tessellation** (on page 45)—Used to customize the tessellation settings for all objects within the model. These settings are used when you triangulate (mesh) the faces/bodies of the model.

  Note: If you enter 0 (zero) for any of the tessellation settings, they are not taken into effect during the tessellation process.

  - **Angle tolerance**—The maximum angular deviation allowed between a face and its triangulation. Pairs of triangles do not incorporate a dihedral angle greater than this amount. This parameter gives a user added control over faces with very small radii. Lower values result in finer tessellations, while higher values give coarser tessellations.
  - **Planar tolerance**—The maximum distance allowed between a face and its triangulation for 3D solid objects. Triangle interiors do not deviate from the face interior by more than this amount.
  - **Tessellation tolerance**—The maximum distance allowed between an edge/curve and its tessellation. Triangle edges do not deviate from edges of the face by more than this amount, or by more than the maximum distance between the edge and the side of the facets along the edge when used in face triangulation.

  Tip: If you only want tessellation of edges/curves, enter values for the tessellation tolerance and angular tolerance.

  Note: Both planar and tessellation tolerance are considered in the units of the model being meshed. Therefore, they should be set to a similar value according to the model size to noticeably reduce the number of triangles generated. Model size/100 is a good starting point depending whether you want a fine or coarse mesh.

- **Display**—Used to display 2D vectors and 3D solids, or 3D solids only.
  - **2D vector and 3D solids**—Displays 2D vectors and 3D solids. Only the tessellation of 2D vectors is affected.
  - **3D solids**—Displays 3D solid objects only. As planar tolerance is for face triangulation of 3D solid objects only, this selection ensures planar tolerance affects the tessellation.
- **Tessellation**—Used to select the tessellation with which to import the file.
  - **Default**—Imports the file using the default tessellation settings.
  - **Custom**—Imports the file using the customized tessellation settings.

Geometry Transform (on page 44)—Used to transform (rotate, position, and scale) the scene along the X, Y, and Z axes.

- **Rotation**—Used to set the degrees of rotation around each axis from 0 to 360 degrees. The rotation values can be entered with up to 6 decimal places.
  - **X**—Rotates the scene along the X axis.
  - **Y**—Rotates the scene along the Y axis.
  - **Z**—Rotates the scene along the Z axis.
- **Position**—Used to set the position of the scene along the X, Y, and Z axes.
  - **X**—Positions the scene along the X axis.
  - **Y**—Positions the scene along the Y axis.
  - **Z**—Positions the scene along the Z axis.
- **Scale**—Used to scale the object along the X, Y, and Z axes.
  - **X**—Scales the scene along the X axis.
  - **Y**—Scales the scene along the Y axis.
  - **Z**—Scales the scene along the Z axis.

Stereolithography File (.stl)

You can view Stereolithography Rapid Prototyping Data (.stl) files.

The .stl file format is an intermediate data file that allows stereolithography devices to deal with solids made by triangles. It is typically generated as a by-product of geometry rich CAD data (for example, NURBS). While still a means to move around unstructured meshes made by triangles, this file format is growing in popularity due to its simplicity: .stl files are composed of a set of many unsorted triangular facets. An .stl file has two formats: ASCII and binary. When the binary format is used to describe an STL file, the data size is much smaller than the ASCII format. For this reason, most .stl files available now use the binary format.

For further information on using files, please see Opening Files **(on page 42)**, Importing Files (on page 43), and Saving Files (on page 56).

Support

- ASCII and binary.

Example

The following example shows the ASCII format of an .stl file:

```
solid sample.stl
facet normal -1.000000 0.000000 0.000000
outer loop
vertex 140.502634 233.993075 -38.310362
vertex 140.502634 229.424780 -38.359042
vertex 140.502634 242.525774 -27.097848
endloop
endfacet
facet normal 0.903689 0.004563 0.428166
outerloop
vertex 134.521310 273.427873 30.342009
vertex 134.521310 308.505852 30.715799
vertex 140.502634 334.576026 18.369396
endloop
endfacet
facet normal -0.903689 0.004563 0.428166
outer loop
vertex 140.502634 334.576026 18.369396
vertex 140.502634 294.929752 17.946926
vertex 134.521310 273.427873 30.342009
endloop
endfacet
... ...
endsolid sample.stl
```

Copyright © Right Hemisphere 2006. All Rights Reserved.

Stereolithography Rapid Prototyping Data Export (.stl)

You can save files to the Stereolithography Rapid Prototyping Data Export (.stl) format.

The .stl file format is an intermediate data file that allows stereolthography devices to deal with solids made by triangles. It is typically generated as a byproduct of geometry rich CAD data (e.g. NURBS). While still a means to move around unstructured meshes made by triangles, this file format is growing in popularity due to its simplicity: .stl files are composed of a set of many unsorted triangular facets. An .stl file has two formats: ASCII and binary. When the binary format is used to describe an STL file, the data size is much smaller than the ASCII format. For this reason, most .stl files available now use the binary format.

The STL export plugin writes out the scene to an ASCII-formatted or binary-formatted StereoLithography .stl file.

For further information on using files, please see Opening Files **(on page 42)**, Importing Files (on page 43), and Saving Files (on page 56).

Support

- ASCII and binary versions.

Interface

ASCII mode—Saves the file in ASCII format. Otherwise, the .stl files is saved as a binary file.

Unigraphics Parts and Assemblies Import (.prt)

You can import and view Unigraphics Parts and Assemblies (.prt) files.

The import options differ depending on the version of Deep Exploration you have installed:

- Certain options are available with the CAD Edition of Deep Exploration.
- Certain options are available with the Standard Edition of Deep Exploration and the Unigraphics Module.

Note that support for the CAD format versions (on page 526) also differs depending on the version of Deep Exploration you have installed.

Unigraphics Parts and Assemblies CAD Edition Import

You can import and view Unigraphics Parts and Assemblies (.prt) files using the import options delivered with the CAD Edition of Deep Exploration.

For further information on using files, please see Opening Files **(on page 42)**, Importing Files (on page 43), and Saving Files (on page 56).

Support

- 2D vector data.
- Assembly hierarchy.
- Materials and object names.
- Meshes.
- Parts data.
- Tessellation control.

Limitations

- Animation.
- BOM support based on part names.
- NURBS/Solids.
- Textures.
- UV coordinates.

Interface

Common—Used to establish the common settings including tessellation (arrangement and density of the polygons) settings. Note that if you enter 0 (zero) for any of the tessellation settings, they are not taken into effect during the tessellation process.

- **Surface deviation** (on page 45)—Determines the maximum distance allowed between original analytical surface and its tessellated representation. Triangle edges do not deviate from edges of the face by more than this amount. The units are expressed as unit size based on those used by the model. A smaller surface deviation produces more triangles for smoother models.

Copyright © Right Hemisphere 2006. All Rights Reserved.

- **Normal deviation** (on page 45)—Determines the maximum angular deviation (in degrees) allowed between a analytical surface and its triangulation. Pairs of triangles do not incorporate a dihedral angle greater than this amount. For example, this setting dictates the minimum number of facets around a smaller circle or cylinder regardless of the Surface Deviation setting. This parameter gives you added control over faces with very small radii. Lower values result in finer tessellations, while higher values give coarser tessellations.
- **Import hidden objects**—Imports all hidden objects. If, after importing a file, you modify any visible objects that contain hidden sub-objects after import, those hidden objects are also modified.
- **Display hidden objects**—Displays all hidden objects in the viewport after importing the file.
- **Import sheet bodies**—Imports all construction geometry. Sheet bodies are flat surfaces from which each object is cut.

  Note: If a file contains sheet bodies, this option must be selected for the file to be imported correctly.

- **Import wireframes**—Imports all wireframes if any exist.
- **Unit**—Used to select the unit type for which you want to view its custom unit (scene unit) measurement in meters. For example, 1 custom unit = 0.01 meters.
  - **File default**—Imports the file using the file's units.
  - **Millimeters**—Imports the file in millimeters.
  - **Centimeters**—Imports the file in centimeters.
  - **Meters**—Imports the file in meters.
  - **Inches**—Imports the file in inches.
  - **Feet**—Imports the file in feet.
- **Reference Sets**—Used to import groups of parts in a specific order. The order of preference defines the order in which groups of parts are imported, the first reference set in the 'Reference set type' list is read. If it fails, the second reference set in the list is read and so on. This process continues until the file is successfully imported.
  - **Reference set type**—Used to select which reference set to import. The sets are ordered in import preference.
    - **As Saved**—Imports all the reference sets that were last saved in the scene.
    - **Entire Part**—Imports all the reference sets in the scene.
    - **Empty**—Does not import any reference sets.
    - **User-defined**—Imports the reference set as defined in the 'User-defined reference set' option.
  - **User-defined reference set**—The name of the reference set to import.
  - **Apply to all levels**—Applies the reference set import settings to all the model's sub-objects.
- **Ignore material opacity**—Disregards any material transparency that may have been set in the original file via an external application. That is, all the objects appear opaque. For example, a material opacity of 30% for an object is ignored, and the object is displayed with 100% opacity.
- **Auto-correct view orientation**—Attempts to correct the file's original view orientation to align with Deep Exploration's view orientation.
- **Import PMI** (on page 194)—Displays the Product Manufacturing Information (PMI) in the 3D Objects list and creates a camera for every model view found within the file. The cameras are created in a Model View folder for each object that has a model view. You can view the scene through one of these cameras.

Geometry Transform (on page 44)—Used to transform (rotate, position, and scale) the scene along the X, Y, and Z axes.

- **Rotation**—Used to set the degrees of rotation around each axis from 0 to 360 degrees. The rotation values can be entered with up to 6 decimal places.

  - **X**—Rotates the scene along the X axis.
  - **Y**—Rotates the scene along the Y axis.
  - **Z**—Rotates the scene along the Z axis.
- **Position**—Used to set the position of the scene along the X, Y, and Z axes.
  - **X**—Positions the scene along the X axis.
  - **Y**—Positions the scene along the Y axis.
  - **Z**—Positions the scene along the Z axis.
- **Scale**—Used to scale the object along the X, Y, and Z axes.
  - **X**—Scales the scene along the X axis.
  - **Y**—Scales the scene along the Y axis.
  - **Z**—Scales the scene along the Z axis.

Unigraphics Parts and Assemblies Import (.prt)

You can import and view Unigraphics Parts and Assemblies (.prt) files.

For further information on using files, please see Opening Files **(on page 42)**, Importing Files (on page 43), and Saving Files (on page 56).

Support

- 2D vector data.
- Assembly hierarchy is supported when importing using Method A.
- Materials and object names.
- Meshes.
- Parts data.
- Tessellation control.
- UV coordinates are supported when importing using the Legacy method.

Limitations

- Animation.
- Assembly hierarchy is not supported when importing using the Legacy method and the file is split into two temporary files.
- BOM support based on part names.
- NURBS/Solids data.
- Textures.

Interface

Common—Used to establish the common settings including tessellation (arrangement and density of the polygons) settings. Note that if you enter 0 (zero) for any of the tessellation settings, they are not taken into effect during the tessellation process.

- **Surface deviation** (on page 45)—Determines the maximum distance allowed between original analytical surface and its tessellated representation. Triangle edges do not deviate from edges of the face by more than this amount. The units are expressed as unit size based on those used by the model. A smaller surface deviation produces more triangles for smoother models.

Copyright © Right Hemisphere 2006. All Rights Reserved.

- **Normal deviation** (on page 45)—Determines the maximum angular deviation (in degrees) allowed between a analytical surface and its triangulation. Pairs of triangles do not incorporate a dihedral angle greater than this amount. For example, this setting dictates the minimum number of facets around a smaller circle or cylinder regardless of the Surface Deviation setting. This parameter gives you added control over faces with very small radii. Lower values result in finer tessellations, while higher values give coarser tessellations.
- **Import hidden objects**—Imports all hidden objects. If, after importing a file, you modify any visible objects that contain hidden sub-objects after import, those hidden objects are also modified.

Import Method—Used to establish the way in which to import the file.

- **Method**—The method in which the file is imported. Each method utilizes differing import options to import the file.
  - **Method A**—Imports the file using Method A.
  - **Legacy**—Imports the file using the Legacy method.

Method A—Used to establish the Method A settings.

- **Display hidden objects**—Displays all hidden objects in the viewport after importing the file.
- **Import sheet bodies**—Imports all construction geometry. Sheet bodies are flat surfaces from which each object is cut.

Note: If a file contains sheet bodies, this option must be selected for the file to be imported correctly.

- **Import wireframes**—Imports all wireframes if any exist.
- **Unit**—Used to select the unit type for which you want to view its custom unit (scene unit) measurement in meters. For example, 1 custom unit = 0.01 meters.
  - **File default**—Imports the file using the file's units.
  - **Millimeters**—Imports the file in millimeters.
  - **Centimeters**—Imports the file in centimeters.
  - **Meters**—Imports the file in meters.
  - **Inches**—Imports the file in inches.
  - **Feet**—Imports the file in feet.
- **Ignore material opacity**—Disregards any material transparency that may have been set in the original file via an external application. That is, all the objects appear opaque. For example, a material opacity of 30% for an object is ignored, and the object is displayed with 100% opacity.
- **Auto-correct view orientation**—Attempts to correct the file's original view orientation to align with Deep Exploration's view orientation.
- **Import PMI** (on page 194)—Displays the Product Manufacturing Information (PMI) in the 3D Objects list and creates a camera for every model view found within the file. The cameras are created in a Model View folder for each object that has a model view. You can view the scene through one of these cameras.

Legacy—Used to establish the Legacy settings.

- **Maximum edge length** (on page 45)—Selects the maximum allowed length of each edge, as a percentage the scene bounding box diagonal. This helps to prevent long, narrow polygons being created. For example, if you enter 10%, the length of any edge will be less than 1/10 of diagonal length of object’s bounding box.
- **Grid aspect ratio** (on page 45)—Determines the ratio (between 0 and 1) of the width to height for each 'surface square'. For example, if you enter 1, the tessellation process attempts to produce squares instead of rectangles. This is helpful in avoiding the creation of very long, narrow triangles which can cause undesirable lighting and shading artifacts.

- **Create material for all faces**—Creates and assigns a new material to all the faces. The new materials have the same names as the faces (if face names exist). Otherwise, it uses the objects' names.
- **Merge sub-objects**—Combines all sub-objects into a single part.
- **Heal solid objects**—Welds the edges of all solid objects together.
- **Log file**—Creates an information log file in the same folder as the 3D file. The log includes system information, user-specified settings, a conversion summary, and the result of the import.
- **Split files over [MB]**—Divides the file into smaller temporary files if the file exceeds the specified file size. This is helpful as the tessellation process can create numerous vertices exceeding the available memory.

  Note: Using this option can speed up tessellation process even if the import file does not exceed the specified size.

- **File size**—The size at which the file is divided into smaller temporary files.

Reference Sets—Used to import groups of parts in a specific order. The order of preference defines the order in which groups of parts are imported, the first reference set in the 'Reference set type' is read. If it fails, the second reference set in the list is read and so on. This process continues until the file is successfully imported.

- **Reference set type**—Used to select which reference set to import. The sets are ordered in import preference.
  - **As Saved**—Imports all the reference sets that were last saved in the scene.
  - **Entire Part**—Imports all the reference sets in the scene.
  - **Empty**—Does not import any reference sets.
  - **User-defined**—Imports the reference set as defined in the 'User-defined reference set' option.
- **User-defined reference set**—The name of the reference set to import.
- **Apply to all levels**—Applies the reference set import settings to all the model's sub-objects.

Geometry Transform (on page 44)—Used to transform (rotate, position, and scale) the scene along the X, Y, and Z axes.

- **Rotation**—Used to set the degrees of rotation around each axis from 0 to 360 degrees. The rotation values can be entered with up to 6 decimal places.
  - **X**—Rotates the scene along the X axis.
  - **Y**—Rotates the scene along the Y axis.
  - **Z**—Rotates the scene along the Z axis.
- **Position**—Used to set the position of the scene along the X, Y, and Z axes.
  - **X**—Positions the scene along the X axis.
  - **Y**—Positions the scene along the Y axis.
  - **Z**—Positions the scene along the Z axis.
- **Scale**—Used to scale the object along the X, Y, and Z axes.
  - **X**—Scales the scene along the X axis.
  - **Y**—Scales the scene along the Y axis.
  - **Z**—Scales the scene along the Z axis.

Copyright © Right Hemisphere 2006. All Rights Reserved.

VDA File Import (.vda)

You can import and view VDA (Verband Der Automobilindustrie Flachen Schnittstelle Exchange) (.vda) files.

The .vda file format (VDA-FS) is a standard file format to exchange surface data. It is popular in Europe due to the endorsement of several major European car manufacturers. It represents all the data in polynomial form making it relatively easy to write a stable and reliable processor to import 3D surfaces. The polynomial representation has several limitations over more modern ones like NURBS. Using VDA-FS to exchange 3D data provides a relatively reliable way to move data around.

For further information on using files, please see Opening Files **(on page 42)**, Importing Files (on page 43), and Saving Files (on page 56).

Support

- 2D vector data.
- Assembly hierarchy.
- Meshes.
- Parts data.
- Material and object names.
- Tessellation control.
- UV coordinates are supported when importing using Method A.

Limitations

- Animation.
- BOM support based on part names.
- Configurations.
- Solids/NURBS.
- Textures.

Interface

Import Method—Used to establish the way in which to import the file.

- **Method**—The method in which the file is imported. Each method utilizes differing import options to import the file.
  - **Method A**—Imports the file using Method A.
  - **Legacy**—Imports the file using the Legacy method.

Method A—Used to establish the Method A settings.

- **Surface deviation** (on page 45)—Determines the maximum distance allowed between original analytical surface and its tessellated representation. Triangle edges do not deviate from edges of the face by more than this amount. The units are expressed as unit size based on those used by the model. A smaller surface deviation produces more triangles for smoother models.
- **Normal deviation** (on page 45)—Determines the maximum angular deviation (in degrees) allowed between a analytical surface and its triangulation. Pairs of triangles do not incorporate a dihedral angle greater than this amount. For example, this setting dictates the minimum number of facets around a smaller circle or cylinder regardless of the Surface Deviation setting. This parameter gives you added control over faces with very small radii. Lower values result in finer tessellations, while higher values give coarser tessellations.

- **Import hidden objects**—Imports all hidden objects. If, after importing a file, you modify any visible objects that contain hidden sub-objects after import, those hidden objects are also modified.
- **Display hidden objects**—Displays all hidden objects in the viewport after importing the file.
- **Import sheet bodies**—Imports all construction geometry. Sheet bodies are flat surfaces from which each object is cut.

  Note: If a file contains sheet bodies, this option must be selected for the file to be imported correctly.

- **Import wireframes**—Imports all wireframes if any exist.
- **Unit**—Used to select the unit type for which you want to view its custom unit (scene unit) measurement in meters. For example, 1 custom unit = 0.01 meters.
  - **File default**—Imports the file using the file's units.
  - **Millimeters**—Imports the file in millimeters.
  - **Centimeters**—Imports the file in centimeters.
  - **Meters**—Imports the file in meters.
  - **Inches**—Imports the file in inches.
  - **Feet**—Imports the file in feet.
- **Ignore material opacity**—Disregards any material transparency that may have been set in the original file via an external application. That is, all the objects appear opaque. For example, a material opacity of 30% for an object is ignored, and the object is displayed with 100% opacity.
- **Auto-correct view orientation**—Attempts to correct the file's original view orientation to align with Deep Exploration's view orientation.
- **Import PMI** (on page 194)—Displays the Product Manufacturing Information (PMI) in the 3D Objects list and creates a camera for every model view found within the file. The cameras are created in a Model View folder for each object that has a model view. You can view the scene through one of these cameras.

Legacy—Used to establish the Legacy settings.

- **Default Tessellation** (on page 45)—Used to import the file using the default tessellation settings (arrangement and density of the polygons).

  Note: If you enter 0 (zero) for any of the tessellation settings, they are not taken into effect during the tessellation process.

  - **Tessellation**—Used to import the file using the level of tessellation.
    - **Very high**—Displays a very high resolution using the values directly from the file. You are able to set custom values to give you a higher tessellation if a file has a very high polygon count. Note that using this option reduces processing speed.
    - **High**—Displays a high resolution with a high number of polygons. That is, the planer tolerance is set to the tessellation tolerance.
    - **Medium**—Displays a medium resolution with a medium number of polygons. That is, the planer tolerance is set to the tessellation tolerance and both are multiplied by 10.
    - **Low**—Displays a low resolution with a low number of polygons. That is, the planer tolerance is set to the tessellation tolerance and both are multiplied by 100. This option increases processing speed.
- **Custom Tessellation** (on page 45)—Used to customize the tessellation settings for all objects within the model. These settings are used when you triangulate (mesh) the faces/bodies of the model.

  Note: If you enter 0 (zero) for any of the tessellation settings, they are not taken into effect during the tessellation process.

Copyright © Right Hemisphere 2006. All Rights Reserved.

  - **Angle tolerance**—The maximum angular deviation allowed between a face and its triangulation. Pairs of triangles do not incorporate a dihedral angle greater than this amount. This parameter gives a user added control over faces with very small radii. Lower values result in finer tessellations, while higher values give coarser tessellations.
  - **Planar tolerance**—The maximum distance allowed between a face and its triangulation for 3D solid objects. Triangle interiors do not deviate from the face interior by more than this amount.
  - **Tessellation tolerance**—The maximum distance allowed between an edge/curve and its tessellation. Triangle edges do not deviate from edges of the face by more than this amount, or by more than the maximum distance between the edge and the side of the facets along the edge when used in face triangulation.

Tip: If you only want tessellation of edges/curves, enter values for the tessellation tolerance and angular tolerance.

Note: Both planar and tessellation tolerance are considered in the units of the model being meshed. Therefore, they should be set to a similar value according to the model size to noticeably reduce the number of triangles generated. Model size/100 is a good starting point depending whether you want a fine or coarse mesh.

- **Display**—Used to display 2D vectors and 3D solids, or 3D solids only.
  - **2D vector and 3D solids**—Displays 2D vectors and 3D solids. Only the tessellation of 2D vectors is affected.
  - **3D solids**—Displays 3D solid objects only. As planar tolerance is for face triangulation of 3D solid objects only, this selection ensures planar tolerance affects the tessellation.
- **Tessellation**—Used to select the tessellation with which to import the file.
  - **Default**—Imports the file using the default tessellation settings.
  - **Custom**—Imports the file using the customized tessellation settings.

Geometry Transform (on page 44)—Used to transform (rotate, position, and scale) the scene along the X, Y, and Z axes.

- **Rotation**—Used to set the degrees of rotation around each axis from 0 to 360 degrees. The rotation values can be entered with up to 6 decimal places.
  - **X**—Rotates the scene along the X axis.
  - **Y**—Rotates the scene along the Y axis.
  - **Z**—Rotates the scene along the Z axis.
- **Position**—Used to set the position of the scene along the X, Y, and Z axes.
  - **X**—Positions the scene along the X axis.
  - **Y**—Positions the scene along the Y axis.
  - **Z**—Positions the scene along the Z axis.
- **Scale**—Used to scale the object along the X, Y, and Z axes.
  - **X**—Scales the scene along the X axis.
  - **Y**—Scales the scene along the Y axis.
  - **Z**—Scales the scene along the Z axis.

Wavefront Studio Wireframe Import (.wire)

You can import and view Wavefront Studio Wireframe (.wire) files using the import options delivered with the Standard Edition of Deep Exploration, the gPlug Module, and the Pro/E Module.

The .wire file format is a compressed proprietary format used by StudioTools products. Programmers can access .wire files via the Alias Systems OpenModel library. Supported entities include surfaces, curves, and polygon sets.

For further information on using files, please see Opening Files **(on page 42)**, Importing Files (on page 43), and Saving Files (on page 56).

Support

- 2D vector data.
- Assembly hierarchy.
- Meshes.
- Parts data.
- UV coordinates.
- Tessellation control.

Limitations

- Animation.
- Assembly data.
- BOM support based on part names.
- Configurations.
- Material attributes.
- Parts data.
- Solids/NURBS.
- Textures.

Interface

Legacy—Used to establish the Legacy settings.

- **Default Tessellation** (on page 45)—Used to import the file using the default tessellation settings (arrangement and density of the polygons).

  Note: If you enter 0 (zero) for any of the tessellation settings, they are not taken into effect during the tessellation process.

  - **Tessellation**—Used to import the file using the level of tessellation.
    - **Very high**—Displays a very high resolution using the values directly from the file. You are able to set custom values to give you a higher tessellation if a file has a very high polygon count. Note that using this option reduces processing speed.
    - **High**—Displays a high resolution with a high number of polygons. That is, the planer tolerance is set to the tessellation tolerance.
    - **Medium**—Displays a medium resolution with a medium number of polygons. That is, the planer tolerance is set to the tessellation tolerance and both are multiplied by 10.
    - **Low**—Displays a low resolution with a low number of polygons. That is, the planer tolerance is set to the tessellation tolerance and both are multiplied by 100. This option increases processing speed.

Copyright © Right Hemisphere 2006. All Rights Reserved.

- **Custom Tessellation** (on page 45)—Used to customize the tessellation settings for all objects within the model. These settings are used when you triangulate (mesh) the faces/bodies of the model.

  Note: If you enter 0 (zero) for any of the tessellation settings, they are not taken into effect during the tessellation process.

  - **Angle tolerance**—The maximum angular deviation allowed between a face and its triangulation. Pairs of triangles do not incorporate a dihedral angle greater than this amount. This parameter gives a user added control over faces with very small radii. Lower values result in finer tessellations, while higher values give coarser tessellations.
  - **Planar tolerance**—The maximum distance allowed between a face and its triangulation for 3D solid objects. Triangle interiors do not deviate from the face interior by more than this amount.
  - **Tessellation tolerance**—The maximum distance allowed between an edge/curve and its tessellation. Triangle edges do not deviate from edges of the face by more than this amount, or by more than the maximum distance between the edge and the side of the facets along the edge when used in face triangulation.

  Tip: If you only want tessellation of edges/curves, enter values for the tessellation tolerance and angular tolerance.

  Note: Both planar and tessellation tolerance are considered in the units of the model being meshed. Therefore, they should be set to a similar value according to the model size to noticeably reduce the number of triangles generated. Model size/100 is a good starting point depending whether you want a fine or coarse mesh.

- **Display**—Used to display 2D vectors and 3D solids, or 3D solids only.
  - **2D vector and 3D solids**—Displays 2D vectors and 3D solids. Only the tessellation of 2D vectors is affected.
  - **3D solids**—Displays 3D solid objects only. As planar tolerance is for face triangulation of 3D solid objects only, this selection ensures planar tolerance affects the tessellation.
- **Tessellation**—Used to select the tessellation with which to import the file.
  - **Default**—Imports the file using the default tessellation settings.
  - **Custom**—Imports the file using the customized tessellation settings.

Geometry Transform (on page 44)—Used to transform (rotate, position, and scale) the scene along the X, Y, and Z axes.

- **Rotation**—Used to set the degrees of rotation around each axis from 0 to 360 degrees. The rotation values can be entered with up to 6 decimal places.
  - **X**—Rotates the scene along the X axis.
  - **Y**—Rotates the scene along the Y axis.
  - **Z**—Rotates the scene along the Z axis.
- **Position**—Used to set the position of the scene along the X, Y, and Z axes.
  - **X**—Positions the scene along the X axis.
  - **Y**—Positions the scene along the Y axis.
  - **Z**—Positions the scene along the Z axis.
- **Scale**—Used to scale the object along the X, Y, and Z axes.
  - **X**—Scales the scene along the X axis.
  - **Y**—Scales the scene along the Y axis.
  - **Z**—Scales the scene along the Z axis.

Windows Metafile (.wmf)

You can view Microsoft Windows Metafile format (.wmf) files.

The .wmf file format (WMF) is used to store vector and bitmap-format image data. WMF is the native vector file format for the Microsoft Windows operating environment. WMF files are actually a collection of GDI (Graphics Device Interface) function calls also native to the Windows environment. When a WMF file is 'played back' (typically using the Windows PlayMetaFile() function) the graphics are rendered. WMF files are device-independent and have no limit to their size.

For further information on using files, please see Opening Files **(on page 42)**, Importing Files (on page 43), and Saving Files (on page 56).

Copyright © Right Hemisphere 2006. All Rights Reserved.

Appendix I: Miscellaneous File Formats

The following miscellaneous file formats are supported by Deep Exploration CAD and Standard Editions and Deep Server. This list is organized alphabetically by file format.

File Format	Type	Extension	View/ Import	Export	Version/Notes
Text File	Text	TXT	Yes (on page 631)		
WinRAR Compressed Archive	Archive	RAR	Yes (on page 632)		
ZIP Archive	Archive	ZIP	Yes (on page 633)		

Text File (.txt)

You can view Text File (.txt) files.

The .txt file format is a pure ASCII text with no formatting. They can also be opened in Notepad, WordPad, or other text editors.

For further information on using files, please see Opening Files **(on page 42)**, Importing Files (on page 43), and Saving Files (on page 56).

Copyright © Right Hemisphere 2006. All Rights Reserved.

WinRAR Compressed Archive (.rar)

You can view the compressed files contained within WinRAR Compressed Archive (.rar) files.

The .rar file format is the native format of WinRAR archiver. Like other archives, .rar files are data containers, they store one or several files in the compressed form.

Note: When you open an archive file, you are able to view the compressed files that are contained within it.

For further information on using files, please see Opening Files **(on page 42)**, Importing Files (on page 43), and Saving Files (on page 56).

ZIP Archive (.zip)

You can view the compressed files contained within ZIP Archive (.zip) files.

The .zip file format is a format where files are compressed (referred to as 'zipped') using a file compression program such as PKZip for DOS or Winzip for Windows. It is a popular archive format widely used in the Internet. Like other archives, .zip files are data containers, they store one or several files in the compressed form.

After you download .zip file, you must unpack its contents in order to use it.

Note: When you open an archive file, you are able to view the compressed files that are contained within it.

For further information on using files, please see Opening Files **(on page 42)**, Importing Files (on page 43), and Saving Files (on page 56).

Copyright © Right Hemisphere 2006. All Rights Reserved.

Index

2

2D Editor Toolbar • 217, 295
2D Images • 369
2D Navigation Shortcuts • 62, 356
2D Tools Menu • 220, 221, 315
2D View Tab • 81, 82, 224, 295, 369
2D Viewport Menus • 315, 384

3

3D Editor Toolbar • 38, 74, 77, 86, 90, 101, 141, 205, 266, 294, 295
3D Navigation Shortcuts • 22, 62, 357
3D Objects List Menu • 96, 269, 336
3D Tools Menu • 220, 222, 321
3D View Tab • 38, 61, 84, 86, 225, 230, 271
3D Viewport Menus • 96, 240, 269, 315
3ds max • 13, 21
3ds max DCOM Plugin • 350, 420

A

Accelerator Files • 48, 553, 571, 576, 582, 588, 607, 612
Add Deep Server Dialog • 327
Add Project Dialog • 178, 329
Adding Projects • 178, 249, 250, 328, 329, 332
Adding, Renaming and Removing Servers • 175, 176, 177, 249, 251, 327, 328
Additional Map Properties Dialog • 284, 285, 492
Address Bar • 253, 254
Adobe Encapsulated Postscript Export (.eps) • 374, 376
Adobe Illustrator Vector Graphic (.ai) • 374, 377
Adobe Illustrator Vector Graphic Export (.ai) • 374, 378
Adobe Photoshop Document (.psd) • 374, 379
Adobe Portable Document 3D Export (.pdf) • 193, 374, 380
Advanced Search Panel • 183, 251
Advanced Settings • 137
Advanced Streaming Format (.asf) • 502, 503
Advanced Tab • 82, 271, 272
animation • 198
Animation • 7, 101, 188, 189, 254, 269, 272, 277, 281, 282, 297, 369
Animation Controls • 101, 102, 123, 198, 253, 254, 258
Animation Options Dialog • 103, 123, 202, 213, 255, 257, 323
Animation Tab • 56, 57
Animation Timeline • 101, 253, 255, 257, 345
Animation Timeline Menus • 255, 258, 322
Animation Tree • 101, 268, 289
Animation Tree Menu • 101, 288, 289, 339
AOFF File Format (.geo) • 420, 422
AOFF File Format Export (.geo) • 420, 423
Appearance Tab • 287
Appendix A
  2D File Formats • 134, 135, 149, 374
Appendix B
  3D File Formats • 420
Appendix C
  Audio File Formats • 106, 260, 494
Appendix D
  Video File Formats • 106, 293, 502
Appendix E
  Motion Capture File Formats • 507
Appendix F
  Material File Formats • 518
Appendix G
  Shader File Formats • 523
Appendix H
  CAD File Formats • 15, 16, 37, 43, 526, 537, 542, 553, 561, 566, 571, 576, 582, 588, 607, 612, 619
Appendix I
  Miscellaneous File Formats • 42, 310, 630
Assemblies Tab • 248, 249
Asset and Item Node Menu • 333
Assets and Derivatives • 174, 333
Assets Tab • 248, 249, 250
Associated Files • 175, 184, 333, 334
Assumptions • 21
Attributes Tab • 222, 271, 272, 321
Audio and Video Files • 106, 260, 293
Audio Controls • 106, 253, 260, 495, 496, 497, 498, 499, 500, 501
Audio Interchange Format (.aif, .aiff) • 494, 495
Audio Video Interleave Animation (.avi) • 502, 504
Audio Video Interleave Animation Export (.avi) • 502, 505
Auto Fly-Around • 214, 306
AutoCAD Drawing Interchange Export (.dxf) • 526, 528
AutoCAD Drawing Interchange Import (.dxf) • 526, 529
AutoCAD Drawing Object Import (.dwg) • 526, 530
Autodesk 3D Studio ASCII (.asc) • 420, 424
Autodesk 3D Studio ASCII Export (.asc) • 420, 425
Autodesk 3D Studio Export (.3ds) • 420, 426
Autodesk 3D Studio Import (.3ds) • 420, 427
Autodesk 3D Studio Material (.mli) • 443, 444, 518, 519
Autodesk 3D Studio Max ASCII (.ase) • 420, 428
Autodesk 3D Studio Project Import (.prj) • 420, 429

Autodesk Animator Graphic (.cel) • 374, 383
Autodesk Inventor Assembly Import (.iam) • 526, 532
Autodesk Inventor Part Import (.ipt) • 526, 534

B

Basic Search Panel • 183, 251
Basic Tab • 222, 282, 321
Batch Operations • 199, 202, 325
Benchmark Settings Dialog • 107, 223
Benchmarking a File • 7, 107, 222, 223, 321
BioVision Hierarchical Data and Character Studio Sub-Format Export (.bvh) • 507, 508
BioVision Hierarchical Data and Character Studio Sub-Format Import (.bvh) • 507, 510
BOM Settings Dialog • 126, 127, 130, 289
Bone Tab • 274, 276
BREP Tab • 275
Browse a Folder • 353
Browsing and Viewing Assets and Items • 175, 182, 184

C

CAD Modules Tab • 227, 553, 571, 576, 582, 588, 607, 612
CADKEY Advanced Design Language Import (.cdl) • 526, 536
CADTools • 7, 15, 18, 38, 109, 255
CADTools Toolbar • 294, 297
Calculating Intersections • 136, 137, 381
Caligari trueSpace Object Export (.cob) • 420, 430
Caligari trueSpace Object Import (.cob) • 420, 431
Caligari trueSpace Scene Import (.scn) • 420, 432
Callout Settings Dialog • 126, 127, 128, 289
Callout Tab • 142
Callouts • 7, 38, 126, 128, 134, 141, 188, 189, 192, 289
Camera Tab • 78, 274, 276
Camera Views • 62, 65, 72, 212, 319, 320
CATIA CAD Edition Import • 537
CATIA Import (.cgr, .dlv, .model) • 526, 537
CATIA Model Import (.cgr, .dlv, .model) • 526, 539
CATIA5 Assembly and Part Import (.catpart, .catproduct) • 526, 542, 544
CATIA5 CAD Edition Import • 542
Character Studio Export (.csm) • 507, 511
Character Studio Import (.csm) • 507, 512
CINEMA 4D (.c4d) • 420, 433
Closing Deep Exploration • 8, 197, 200
Color and HDR Images • 149, 151
Color Objects Settings • 125, 298
Coloring Objects • 109, 124, 298
Colors Tab • 38, 69, 226, 228
Command Line Arguments • 77, 352
Comparing Parts • 131
Computer Graphics Metafile Export (.cgm) • 526, 547
Computer Graphics Metafile Import (.cgm) • 526, 548
Contents Tab • 32
Controls • 101, 198, 206, 253, 345
Conventions • 22
Convert 2D Files • 203, 204
Convert 3D Files • 156, 203
Converting to Double-Sided • 109, 122, 222, 297, 321
Coordinate 3D Import (.c3d) • 507, 513
Coordinate Systems • 77, 230, 259, 281, 296, 297, 316, 319
Copyright and Trademarks • 9
Create Menu • 71, 74, 199, 211, 212, 318, 336
Create Step Dialog • 292
Creating Markups • 167
Creating New Scenes • 7, 41, 307
Cross Section Properties Dialog • 209, 286, 319
Customize Layout Dialog • 207, 220, 253, 255, 294, 345
Customizing the User Interface • 38, 67, 198, 206, 207, 253, 254, 258, 260, 263, 264, 265, 266, 267, 290, 294, 295, 345

D

Deep Exploration Overview • 7, 37
Default Material • 79, 228, 230
Defining Search Terms
  Using Boolean Expressions • 29
Deleting Assemblies • 178, 186, 333
Deleting Markups • 144, 167, 168, 194, 309
Dimension Tab • 142
DirectX DirectDraw Surface (.dds) • 374, 384
DirectX Model Export (.x) • 420, 434
DirectX Model Import (.x) • 420, 435
Display a Slide Show • 353
Display Menu • 61, 70, 71, 79, 98, 199, 208, 228, 271, 298
Display Menu Shortcuts • 70, 358
Display Modes • 77, 206, 307, 353
Display Renderer • 156, 161, 198, 199, 209, 215, 223, 233, 306, 344
Display Settings Panel • 69, 208, 253, 260, 273, 317
Display Toolbar • 70, 79, 210, 228, 271, 294, 298
Displaying and Deleting Markups • 167, 168, 309
Documentation • 25
Documentation Conventions • 23
Downloading Assets and Items • 175, 178, 181, 182, 184, 185, 248, 249, 313, 327, 328, 332, 333
Downloads Tab • 313

E

EA/Amiga Interchange File Format (.iff) • 374, 385
Edit Menu • 199, 205, 290, 312
Edit Sequence Dialog • 256, 257, 341
Edit Shader Dialog • 162, 286
Editing Markups • 141, 167, 194
eLicense • 33
eLicensing • 33
Embedding Content • 133, 175, 181
Environment Tab • 70, 210, 259, 270, 276
Explode Objects Settings • 123, 298
Exploded Animations • 369
Exploding Objects • 103, 109, 122, 255, 297
Explorer bar • 198
Explorer Bar • 198, 199, 206, 241, 345
External Application Plugins • 349

F

FAQs • 33
Favorites List • 219, 241, 243, 244, 245, 248, 307, 325, 326
Favorites Menu • 199, 219
File Formats Tab • 153
File list • 198
File List • 41, 42, 50, 133, 182, 198, 248, 310, 313
File List Menus • 310, 313, 314, 324
File List Toolbar • 310, 311
File Menu • 199, 215, 307
File Shortcuts • 359
Files Tab • 231
Finding Information Fast • 26
Flexible Precision Buffer Map (.flx) • 374, 386
FLIC Animator Animation (.flc) • 374, 387
FLIC Animator Animation (.fli) • 374, 388
Folder Node Menu • 332
Folders Panel • 160, 241, 243, 244, 245, 248, 254, 307, 310
Folders Panel Menus • 202, 241, 324, 325, 335

G

Gateway Module • 8, 15, 17, 18, 38, 50, 174, 241, 248, 249, 310, 313, 314, 324
Gateway Panel • 174, 175, 241, 243, 244, 245, 248, 326
Gateway Panel Menus • 174, 248, 249, 250, 324, 326
Gateway Properties Dialog • 186, 331
Gateway Tabs • 174, 181, 183, 184, 248, 250, 313
Gateway Tree • 181, 249, 250, 313
General Shortcuts • 360
General Tab • 43, 44, 57, 331
Generate Thumbnails Dialog • 219, 220, 237, 238, 310, 312, 325
Geometry Tab • 276, 278, 279
Geometry Transform • 44, 529, 530, 532, 534, 536, 538, 541, 543, 546, 551, 554, 557, 560, 562, 564, 567, 568, 570, 572, 575, 577, 580, 584, 586, 589, 592, 594, 596, 598, 600, 602, 604, 606, 608, 611, 613, 616, 620, 623, 626, 628
Geometry Transform Tab • 56, 57
Getting Started with Deep Exploration • 7, 39
Granite File Import (.g) • 526, 549
Graphics card • 13
Graphics Interchange Format (.gif) • 374, 389
Grid Menu • 81, 209, 210, 361
Grid Menu Shortcuts • 361
Grouping and Hierarchies • 84, 96, 320, 322, 337, 339, 340

H

hardware • 13
Heal Model Dialog • 121
Heal Model Settings • 120, 121
Healing Models • 109, 118, 120
Help Menu • 199, 238
Hewlett-Packard Graphics Library Import (.plt) • 526, 552
Hierarchical Translations and Rotations Import (.htr) • 507, 514
High Dynamic Range Images • 7, 149, 240, 386, 400, 401, 406
Hints and Tips • 116, 123, 369
History List • 219, 241, 243, 244, 245, 248, 307
History List Menus • 335
HTML Document with 3D (.html) • 420, 436
HTML Help Viewer Toolbar • 28

I

IGES Format CAD Edition Import • 553
IGES Format Import (.iges, .igs) • 526, 553, 555
Illustration Toolbar • 294, 299
Illustration Tools • 7, 15, 18, 38, 134
Imagine Geometry (.iob) • 420, 437

Importing Files • 7, 15, 42, 43, 54, 154, 194, 195, 200, 264, 335, 376, 377, 378, 379, 380, 383, 384, 385, 386, 387, 388, 389, 390, 391, 392, 393, 394, 395, 396, 397, 398, 399, 400, 401, 402, 403, 404, 405, 406, 407, 408, 409, 410, 411, 412, 413, 414, 415, 416, 417, 418, 419, 422, 423, 424, 425, 426, 427, 428, 429, 430, 431, 432, 433, 434, 435, 436, 437, 438, 439, 440, 441, 442, 443, 444, 446, 447, 448, 449, 450, 451, 452, 453, 454, 455, 456, 457, 458, 460, 461, 462, 463, 464, 465, 466, 467, 469, 470, 471, 472, 473, 474, 475, 476, 477, 478, 480, 481, 482, 484, 485, 486, 487, 488, 489, 491, 493, 495, 496, 497, 498, 499, 500, 501, 503, 504, 505, 506, 508, 510, 511, 512, 513, 514, 515, 516, 517, 519, 520, 521, 522, 524, 525, 528, 529, 530, 532, 534, 536, 537, 539, 542, 544, 547, 548, 549, 552, 553, 555, 559, 561, 563, 566, 567, 569, 571, 573, 576, 578, 582, 584, 588, 590, 593, 595, 597, 599, 601, 603, 605, 607, 609, 612, 614, 617, 618, 619, 621, 624, 627, 629, 631, 632, 633
Index Tab • 32
Information Bar • 198, 253, 262
Information Bar Menu • 263, 335
Information Tab • 74, 280, 286
Installation • 17
Interface Components • 198
Internet connection • 13
Interpolation Methods • 102, 103, 259, 323
Introduction • 7
Inverting Faces and Normals • 109, 110, 297, 321
IronCAD 3D CAD Import (.ics) • 526, 559
ISO G Code Format (.iso, .nc) • 420, 438
Item Information Window • 273, 304

J

Join Equal Point Settings • 114, 297
Joining Equal Points • 109, 114, 297, 321
JPEG 2000 J2K (.j2k) • 374, 390
JPEG 2000 JP2 (.jp2) • 374, 391
JPEG 2000 JP2 Export (.jp2) • 374, 392
JPEG 2000 JPC (.jpc) • 374, 393
JPEG 2000 JPC Export (.jpc) • 374, 394
JPEG 2000 JPX (.jpx) • 374, 395
JPEG Image (.jpeg, .jpg) • 374, 396
JPEG Image Export (.jpeg, .jpg) • 374, 397
JT File CAD Edition Import • 561
JT File Import (.jt) • 526, 561, 563

K

Key Properties Dialog • 323, 324
Keyboard Shortcuts • 22, 238, 320, 337, 338, 342, 355
  Help Viewer • 31

L

Lattice XVL Structure and Geometry CAD Edition Import • 566
Lattice XVL Structure and Geometry Import (.xv0, .xv3) • 526, 566, 567
Layer Properties Dialog • 139, 341, 342
Layers • 7, 38, 43, 56, 87, 126, 139, 289, 319, 338, 340
Layers Panel • 98, 139, 268, 289
Layers Panel Menu • 139, 289, 341
Level of Detail Controls • 253, 263, 486
License Activation • 20
Light Tab • 279
Lighting Modes • 70, 262, 299
Lights Menu • 209, 210, 212, 299, 300
Lights Menu Shortcuts • 71, 362
Lights Toolbar • 71, 294, 299
LightWave 3D Binary and Object Export (.lwo, .lw) • 420, 439
LightWave 3D Binary and Object Import (.lwo, lw) • 420, 440
LightWave Scene Export (.lws) • 420, 441
LightWave Scene Import (.lws) • 420, 442
Line Settings Dialog • 170
Local File Search • 50, 51
Local File Search Panel • 51, 246
Logging In and Out of Servers • 176, 249, 328
Login Dialog • 177

M

Maps Tab • 283
Markup Settings • 167, 169
Markup Tab • 143, 169
Markups • 7, 38, 126, 128, 141, 146, 147, 167, 272
Material Properties Dialog • 98, 162, 230, 258, 270, 271, 272, 281, 282, 337, 338
Materials • 84, 87, 98, 189, 288, 310, 337, 338
Materials Folder Menus • 269, 337
Materials List • 38, 98, 268, 287
Materials List Menu • 98, 288, 338
Materials Menu • 209, 211
Materials Menu Shortcuts • 98, 288, 363
Materials Tab • 56, 59, 280, 313
Max File Export (.max) • 420, 443
Max File Import (.max) • 350, 420, 444
Maya • 13, 21
Maya ASCII Scene Export (.ma) • 420, 446
Maya ASCII Scene Import (.ma) • 420, 447
Maya Binary Scene Export (.mb) • 420, 448
Maya Binary Scene Import (.mb) • 420, 449
Maya Interchange File Format (.iff) • 374, 398
Maya Interchange File Format Export (.iff) • 374, 399
Measurement Settings Dialog • 146, 147, 301
Measurements • 7, 38, 141, 145, 300
Measurements Toolbar • 294, 300
Menu bar • 198
Menu Bar • 198, 199, 241, 316, 318, 320, 345
Menu Bar Menu • 335
Merge File • 199, 200
Merge Options Dialog • 54, 201
Merging Files • 7, 54, 200, 201, 310, 467

Messages Dialog • 206, 207, 344
Metadata Dialog • 192, 193, 194, 195, 302, 380, 381
MicroStation CAD Graphic Import (.dgn) • 526, 569
Model View Properties Dialog • 75, 265, 336
Model Views • 38, 73, 75, 126, 139, 167, 188, 189, 192, 265, 317, 380
Model Views Menu • 317
Model Views Panel • 75, 76, 253, 265
Model Views Panel Menu • 265, 335
Modifying Preferences • 187, 327
modules • 23
Modules • 15, 18, 43, 198, 294
Mouse Controls • 22
Move Pivot Point • 95, 296
Move Tool • 92, 296
Moving Pictures Expert Group Video Format (.m1v, .mpeg, .mpg) • 502, 506
MPEG Audio File Format (.mpa, .mp2, .mp3) • 494, 496
MS DirectX Properties Dialog • 234
Musical Instrument Digital Interface (.mid, .midi) • 494, 497
My 3D Models Tab • 313

N

Navigating the Viewports • 61, 62, 74
Navigation Toolbar • 294, 301
Nendo Files (.ndo) • 420, 450
Neutral Part CAD Edition Import • 571
Neutral Part File Import (.neu) • 526, 571, 573
NGRAIN Import (.ngn, .ngw) • 451
Normals • 79
Note Settings Dialog • 169
NURBS Curve Tab • 279
NURBS Surface Tab • 279
NURBS Tab • 232

O

Object and Material Selection • 86, 92, 93, 95
Object Editing Shortcuts • 364
Object Editing Tools • 38, 62, 84, 85, 90, 141, 167, 266, 286, 296
Object Elements Toolbar • 145, 147
Object File Format Vector Graphics (.off) • 420, 452
Object File Format Vector Graphics Export (.off) • 420, 453
Object Instancing • 38, 85, 90, 288, 322
Object Position Controls • 38, 90, 253, 266, 295
Object Properties Dialog • 67, 79, 84, 98, 155, 212, 233, 240, 258, 270, 271, 282, 285, 321, 337, 339, 340, 342
Object Right-Click Menu • 320
Object Tab • 273
Objects and Materials • 7, 84
Open • 199, 200
Open a File • 352
Open Inventor File Export (.iv) • 421, 454
Open Inventor File Import (.iv) • 421, 455
OpenEXR Bitmap (.exr) • 374, 400
OpenEXR Bitmap Export (.exr) • 374, 401
OpenFlight Scene Description Database (.flt) • 421, 456
OpenFlight Scene Description Database Export (.flt) • 421, 457
OpenGL CPP Code Export (.cpp) • 421, 458
Opening Files • 7, 42, 43, 54, 102, 103, 110, 111, 113, 114, 116, 120, 122, 123, 125, 127, 134, 135, 155, 157, 168, 172, 195, 200, 221, 303, 307, 325, 376, 377, 378, 379, 380, 383, 384, 385, 386, 387, 388, 389, 390, 391, 392, 393, 394, 395, 396, 397, 398, 399, 400, 401, 402, 403, 404, 405, 406, 407, 408, 409, 410, 411, 412, 413, 414, 415, 416, 417, 418, 419, 422, 423, 424, 425, 426, 427, 428, 429, 430, 431, 432, 433, 434, 435, 436, 437, 438, 439, 440, 441, 442, 443, 444, 446, 447, 448, 449, 450, 451, 452, 453, 454, 455, 456, 457, 458, 460, 461, 462, 463, 464, 465, 467, 469, 470, 471, 472, 473, 474, 475, 476, 477, 478, 480, 481, 482, 484, 485, 486, 487, 488, 489, 491, 493, 495, 496, 497, 498, 499, 500, 501, 503, 504, 505, 506, 508, 510, 511, 512, 513, 514, 515, 516, 517, 519, 520, 521, 522, 524, 525, 528, 529, 530, 532, 534, 536, 537, 539, 542, 544, 547, 548, 549, 552, 553, 555, 559, 561, 563, 566, 567, 569, 571, 573, 576, 578, 582, 584, 588, 590, 593, 595, 597, 599, 601, 603, 605, 607, 609, 612, 614, 617, 618, 619, 621, 624, 627, 629, 631, 632, 633
Options Dialog • 61, 79, 80, 160, 220, 224, 271, 315
Order ID • 36
Output Tab • 134, 213, 215, 299

P

Pan Tool • 63, 279, 301
Panels • 198
Parasolid CAD File CAD Edition Import • 576
Parasolid CAD File Import (.x_b, .x_t, .xmt, .xmt_txt) • 526, 576, 578
Parts Panel • 98, 126, 288
Parts Panel Menu • 338
PDF Publishing Module • 8, 15, 17, 38, 164, 166, 188, 194, 292, 380
Photoshop • 21
Plugin Manager • 7, 44, 56, 153, 220
plugins • 21
Plugins Tab • 153
PMI Module • 8, 15, 17, 38, 141, 188, 192, 194, 301, 538, 540, 543, 545, 550, 556, 564, 572, 574, 579, 584, 585, 589, 591, 598, 600, 602, 604, 606, 610, 615, 620, 622, 625
PMI Settings Dialog • 141, 194, 302, 303
PMI Toolbar • 194, 301
Points File (.pts) • 421, 460
Polygon File Format (.ply) • 421, 461

Portable Graymap Graphics File Import (.pgm) • 421, 462
Portable Network Graphics (.png) • 374, 402
Portable Network Graphics Export (.png) • 374, 403
Portable Pixelmap Graphic (.ppm) • 374, 404
POV-Ray RAW Triangle (.raw) • 421, 463
POV-Ray RAW Triangle Export (.raw) • 421, 464
Power Render Object (.pro) • 421, 465
Preferences Dialog • 181, 187, 249, 327
Preset Views • 73, 223, 316, 318
Primitives and Modifiers • 7, 38, 84, 155, 304, 305
Primitives and Modifiers Toolbar • 275, 294, 303
Print a File • 352
Pro/ENGINEER Assembly CAD Edition Import • 582
Pro/ENGINEER Assembly Import (.asm) • 526, 582, 584
Pro/ENGINEER Part CAD Edition Import • 588
Pro/ENGINEER Part Import (.prt*, .xpr) • 527, 588, 590
Processing Large Files • 370
Product Menus • 22
Product Registration • 19
Protein Data Bank Import (.pdb) • 421, 466
PTC Pro/DESKTOP Import (.des) • 527, 593
Publisher's Paintbrush Bitmap Graphic (.pcx) • 375, 405
Publishing to PDF • 193
Publishing Web Pages • 7, 13, 56, 156, 420, 421

Q

Quake Character Model I (.mdl) • 421, 469
Quake Character Model II (.md2) • 421, 470
Quake Character Model III (.md3) • 421, 471
Quake Map File (.map) • 421, 472
Quicktime 3D Metafile (.3dm, .3dmf) • 421, 473

R

Radiance Picture Format (.hdr) • 375, 406
Raindrop Geomagic 3D Modelling Import (.wrp) • 527, 595
RAM • 13
Raster Illustration • 134, 213, 215, 299
RAX Extended RAW Triangles (.rax) • 421, 474
Raytracer Tab • 217
Realight Settings • 158, 305
Realight Tool • 7, 15, 18, 38, 109, 157, 294, 305
Realight Toolbar • 305
Real-Time Shader (.fx) • 523, 524
Real-Time Shader Toolbar • 161, 294, 306
Reduce Model Dialog • 117
Reduce Model Settings • 116, 118
Reducing Models • 109, 116, 297, 372
Refining Searches • 50, 53, 198, 310
Refreshing the Gateway Panel • 178, 187, 328, 332, 333
registration • 33
Registration and Activation • 17, 18, 19, 33, 238
Reloading Files • 7, 43, 55
Remove Internal Parts Dialog • 112
Remove Small Parts Settings • 113, 297
Removing Assets and Items • 181, 184, 185, 333
Removing Internal Parts • 109, 111, 297, 321
Removing Small Parts • 109, 112, 297
Renaming and Deleting Objects • 84, 98
Render 3D Files • 203
Render Menu • 62, 199, 212, 217, 218, 306
Render Modes • 62, 68, 79, 208, 228, 229, 230, 262, 271, 281, 298, 299, 316, 317
Render Tab • 209, 215, 233, 306
Render to File • 213, 306
Render Toolbar • 294, 306
Render Window • 216
Renderer Properties • 134, 204, 213, 215, 233, 306
Rendering Callouts • 126, 128
Rescale Animation Dialog • 339, 340
RH 2D Objects • 192
RH Objects • 188, 189
RH PMI Objects • 192
RH Standard Objects • 189
RH Steps Objects • 166, 191
Rhinoceros 3D Model Export (.3dm) • 421, 475
Rhinoceros 3D Model Import (.3dm) • 421, 476
RIFF MIDI File (.rmi) • 494, 498
Right Hemipshere Shader (.rhs) • 523, 525
Right Hemisphere Binary (.rh) • 421, 477
Right Hemisphere Binary Export (.rh) • 56, 67, 75, 139, 161, 421, 478
Right Hemisphere Material (.rhm) • 518, 520
Right Hemisphere Material Export (.rhm) • 518, 521
Right-Click Menus • 61, 65, 87, 198, 205, 208, 315
Right-Click Selection Menu • 322
Rotate Pivot Point • 95, 296
Rotate Tool • 63, 73, 92, 296, 301
Rotating Objects • 92, 371

S

Save As • 199, 201, 213
Save Frames • 199, 202

Saving Files • 7, 56, 154, 156, 193, 201, 203, 204, 213, 214, 307, 376, 377, 378, 379, 380, 383, 384, 385, 386, 387, 388, 389, 390, 391, 392, 393, 394, 395, 396, 397, 398, 399, 400, 401, 402, 403, 404, 405, 406, 407, 408, 409, 410, 411, 412, 413, 414, 415, 416, 417, 418, 419, 422, 423, 424, 425, 426, 427, 428, 429, 430, 431, 432, 433, 434, 435, 436, 437, 438, 439, 440, 441, 442, 443, 444, 446, 447, 448, 449, 450, 451, 452, 453, 454, 455, 456, 457, 458, 460, 461, 462, 463, 464, 465, 467, 469, 470, 471, 472, 473, 474, 475, 476, 477, 478, 480, 481, 482, 484, 485, 486, 487, 488, 489, 491, 493, 495, 496, 497, 498, 499, 500, 501, 503, 504, 505, 506, 508, 510, 511, 512, 513, 514, 515, 516, 517, 519, 520, 521, 522, 524, 525, 528, 529, 530, 532, 534, 536, 537, 539, 542, 544, 547, 548, 549, 552, 553, 555, 559, 561, 563, 566, 567, 569, 571, 573, 576, 578, 582, 584, 588, 590, 593, 595, 597, 599, 601, 603, 605, 607, 609, 612, 614, 617, 618, 619, 621, 624, 627, 629, 631, 632, 633
Scalable Vector Graphics (.svg) • 375, 407
Scalable Vector Graphics Export (.svg) • 375, 408
Scale Tool • 64, 93, 280, 296, 301
Scene Component Panel Icons • 266, 268
Scene Components Panel • 84, 86, 96, 98, 198, 206, 253, 266, 268, 272, 365, 553, 571, 576, 582, 588, 607, 612
Scene Components Panel Menus • 267, 336
Scene Components Panel Shortcuts • 365
Scene Elements • 61, 62, 68, 78, 82, 84
Scene Properties Dialog • 70, 79, 80, 270, 319, 337
Scene Right-Click Menu • 77, 139, 266, 286, 318
Scene Tree • 96, 268, 269
Scene Tree Menus • 336
SDRC I-DEAS Model Import (.arc, .mf1) • 527, 597
SDRC I-DEAS Package Import (.pkg) • 527, 599
SDRC I-DEAS Universal Import (.unv) • 527, 601
Search Panel • 50, 241, 243, 244, 245, 248, 307
Search Tab • 32, 250
Search Tabs • 50, 51, 52, 53, 182, 183, 184, 242, 250, 314
Searching for Assets • 179, 182, 248, 250, 251, 313
Searching for Files • 7, 50, 245, 246, 310, 314
Searching for Help Topics • 29
Searching for Objects • 84, 88
Searching for Words or Phrases Using Wildcards • 29
Secure Online Ordering • 15, 18, 36
Select Objects Dialog • 86, 87, 88, 205, 268, 290
Selecting Callouts • 126, 128
Selecting Materials • 90, 99
Selecting Objects • 84, 86, 96, 126, 144, 162, 168, 290, 296, 316
Selection Shortcuts • 87, 366
Separating Meshes • 109, 113, 297, 322
Sequence Properties Dialog • 257, 339, 341
Sequences • 102, 123, 255
Serial Number • 36
Server Node Menu • 328
Shader Tab • 161, 286
Shaders • 7, 161, 306, 314, 524, 525
Shaders Tab • 161, 314
Shape Settings Dialog • 171
Shockwave 3D File Export (.w3d) • 421, 480, 481
Shockwave Flask Object Export (.swf) • 375, 410
Shockwave Web Page Export (.html) • 421, 480, 481
Showing and Hiding Objects • 84, 96
Silicon Graphics Image (.rgb, .rgba, .int, .inta) • 375, 409
Slide Show Tab • 237
Slide Shows • 7, 160, 237, 307
Smoothing Menu • 209, 212, 273
Smoothing Menu Shortcuts • 367
SOFTIMAGE Picture (.pic) • 375, 411
SOFTIMAGE|XSI (.xsi) • 421, 484
SOFTIMAGE|XSI Export (.xsi) • 421, 482
software • 13, 21
Software Z-Buffer Properties Dialog • 235
Software Z-Buffer Tab • 218
SolidEdge 3D CAD Model Part Import (.par) • 527, 603
SolidWorks Assembly and Part Import (.sldasm, .sldlfp, .sldprt) • 527, 605
Sound Format (.snd) • 494, 499
Special Controls • 23
Standard ACIS Text CAD Edition Import • 607
Standard ACIS Text Import (.sat) • 527, 607, 609
Standard Toolbar • 232, 294, 306
Start in Full-Screen Mode • 353
Start in Standard Mode • 353
Start in View Mode • 354
Status bar • 198
Status Bar • 198, 206, 207, 210, 344
STEP Files CAD Edition Import • 612
STEP Files Import (.step, .stp) • 527, 612, 614
Step Options Dialog • 291
Step Properties Dialog • 164, 166, 191, 292, 343
Steps • 7, 38, 72, 126, 164, 188, 191, 291
Steps Metadata • 164, 166, 191, 292
Steps Panel • 164, 253, 290
Steps Panel Menu • 164, 291, 342
Stereolithography File (.stl) • 527, 617
Stereolithography Rapid Prototyping Data Export (.stl) • 527, 618

Summary Tab • 271
Sun/NeXT/DEC Audio (.au) • 494, 500
support • 33
Support • 33
support form • 33
Surfaces Toolbar • 294, 307
System Requirements • 13

T

Tagged Image File Format (.tif, .tiff) • 375, 412
Tagged Image File Format Export (.tif, .tiff) • 375, 413
Teamwork Toolbar • 294, 308
Teamwork Tools • 7, 76, 141, 167, 209, 308, 309
Tessellation Settings • 45, 532, 534, 537, 538, 539, 540, 542, 543, 544, 545, 549, 550, 554, 556, 557, 559, 566, 567, 568, 569, 572, 573, 574, 575, 577, 579, 580, 583, 585, 586, 589, 590, 591, 592, 593, 594, 595, 597, 599, 601, 603, 605, 608, 609, 610, 611, 613, 614, 615, 616, 619, 620, 621, 622, 624, 625, 627, 628
Text File (.txt) • 630, 631
Texture Maps Tab • 56, 59
Textures Tab • 99, 161, 235, 314, 440, 442
TGA File (.tga) • 375, 414
TGA File Export (.tga) • 375, 415
Thumbnails Tab • 237
toolbar • 198
Toolbars • 198, 206, 294, 345
Tools Menu • 199, 219, 437
Tools Right-Click Menu • 319, 320, 321, 336, 338, 339, 341
Tracked Row Binary Import (.trb) • 507, 515
Tracked Row Character Export (.trc) • 507, 516
Tracked Row Character Import (.trc) • 507, 517
Transformation Tab • 281, 286
Trial Period • 17, 18, 222
Troubleshooting • 33
Tutorials • 33

U

Unify Normals Dialog • 110, 111
Unifying Normals • 109, 110, 223, 297, 322
Unigraphics Parts and Assemblies CAD Edition Import • 619
Unigraphics Parts and Assemblies Import (.prt) • 527, 619, 621
Uninstalling Deep Exploration • 373
Universal 3D Export (.u3d) • 188, 380, 421, 485
Universal 3D Import (.u3d) • 421, 486
Unreal Character File (.psk) • 421, 487
update • 13, 33
Update Asset Dialog • 185, 334
Update Dialog • 34, 239
Updating • 34, 239
Updating Assets • 185, 333, 334
Upload Assembly Dialog • 179, 330
Upload Assets Dialog • 178, 329
Upload Associated Files Dialog • 184, 334
Uploading Assemblies • 175, 178, 179, 250, 328, 330, 332, 333
Uploading Assets and Assemblies • 133, 178, 181, 184, 249, 250, 332
Uploading Single Assets • 175, 178, 250, 328, 329, 332, 333
URL Settings Dialog • 169
Usage Tab • 285
User Details • 332
User Interface • 7, 22, 40, 198
User-Defined Views • 74, 212, 316, 318
Using Deep Exploration • 39, 40
Using Gateway • 175, 176
Using Nested Expressions • 30
Using the HTML Help Viewer • 27
Using the Reference Online • 7, 26
Using Viewports • 38, 56, 61, 72, 75, 91, 92, 98, 164, 206, 213, 230, 240, 316, 345, 368, 479
UV Mapping • 7, 8, 15, 17, 18, 38, 50, 109, 157, 158, 172, 241, 248, 249, 294, 309, 310, 313, 324
UV Mapping Settings • 172, 173, 309
UV Mapping Toolbar • 309
UV Tab • 279

V

VDA File Import (.vda) • 527, 624
Vector Illustration • 56, 106, 126, 128, 134, 135, 299
Vector Illustration Settings Dialog • 193, 380, 381
Version ID • 198
Video Controls • 106, 253, 293
View Menu • 199, 206, 311, 312, 325, 335, 344
Viewing and Hiding Markups • 194, 195
Viewing and Modifying Properties • 175, 186, 329, 331, 332, 333
Viewing Scenes • 7, 61, 485
Viewport Background • 38, 80, 319
Viewport Grid • 38, 81, 210, 224, 230, 299
Viewport Layouts • 66
Viewport Right-Click Menus • 61, 73, 74, 316
Viewports • 98, 198, 240
Views • 72
Views Menu • 61, 73, 74, 212, 317, 318
Views Menu Shortcuts • 73, 368
VRML Worlds Export (.wrl, .vrml) • 421, 488
VRML Worlds Import (.wrl, .vrml) • 421, 489

W

Waveform Audio (.wav) • 494, 501
Wavefront Material (.mtl) • 491, 518, 522
Wavefront Object Export (.obj) • 421, 491, 522
Wavefront Object Import (.obj) • 421, 493
Wavefront Studio Wireframe Import (.wire) • 527, 627
Web Search • 50, 51, 247
Web Search Panel • 51, 246

Web Search Settings Dialog • 247
What's New in Deep Exploration? • 38
Windows Bitmap Graphic Export (.bmp, .dib) • 375, 416
Windows Cursor File (.cur) • 375, 417
Windows Icon File (.ico) • 375, 418
Windows Metafile (.wmf) • 527, 629
Windows Run Length Encoded Bitmap (.rle) • 375, 419
WinRAR Compressed Archive (.rar) • 630, 632
Workspace • 61, 198, 240

Z

ZIP Archive (.zip) • 630, 633
Zoom Tools • 65, 217, 280, 301, 315