

Deep Exploration User Reference Guide

'...visual communication and collaboration'

Contents

Introduction **7**

Copyright and Trademarks....9
CAD and Standard Editions....13
Conventions....15
Using the Reference Online....20
Support....28
License Activation....29
Updating....30

Deep Exploration Overview **32**

What's New in Deep Exploration **33**

Product Tutorials **35**

Getting Started with Deep Exploration **36**

Using Deep Exploration **37**

Creating New Scenes....38
Opening Files....39
Importing Files....40
Searching for Files....48
Managing Files, Themes and Thumbnails....52
Merging Files....53
Reloading Files....54
Saving Files....55
Viewing Scenes....61
Objects and Materials....87
Animation....109
Audio and Video Files....114
Benchmarking a File....115
CADTools....116
Callouts....135
Cutting and Cross-Sectioning....147
Drawing and Markup Tools....151
Embedding Content....161
Illustration Tools....162
Layers....169
Measurements....171
High Dynamic Range Images....176
Plugin Manager....180
Primitives and Modifiers....182
Publishing Web Pages....183
Realight Tool....184
Rendering Scenes....188
Slide Shows....191
Shaders....192
Steps....194
UV Mapping....198
Gateway Module....205
JT PMI Module....220
PDF Publishing Module....223
Closing Deep Exploration....245

User Interface **246**

Menu Bar....248

Copyright © Right Hemisphere 2007. All Rights Reserved.

Workspace ... 299
Explorer Bar ... 300
Controls ... 313
Toolbars ... 363
File List ... 384
Right-Click Menus ... 390
Status Bar ... 421

Customizing the User Interface 422

Displaying and Hiding Components ... 423
Resizing Components ... 424
Docking and Floating Components ... 425

External Application Plugins 426

3ds Max DCOM Plugin ... 427

Command Line Arguments 430

Open a File ... 431
Print a File ... 431
Browse a Folder ... 431
Display a Slide Show ... 431
Start in Standard Mode ... 432
Start in Full-Screen Mode ... 432
Start in View Mode ... 432

Keyboard Shortcuts 433

2D Navigation Shortcuts ... 434
3D Navigation Shortcuts ... 434
Render Mode Menu Shortcuts ... 435
File Shortcuts ... 436
General Shortcuts ... 437
Grid Menu Shortcuts ... 437
Lights Menu Shortcuts ... 437
Materials Menu Shortcuts ... 438
Object Editing Shortcuts ... 438
Scene Components Panel Shortcuts ... 438
Selection Shortcuts ... 438
Smoothing Menu Shortcuts ... 439
Views Menu Shortcuts ... 439

Hints and Tips 440

2D Images ... 441
Compression ... 442
Exploded Animations ... 443
Measurements ... 444
Processing Large Files ... 445
Rotating Objects ... 446
Reducing Models ... 447

Uninstalling Deep Exploration 448

Appendix A: 2D File Formats 449

Adobe Encapsulated Postscript Import (.eps) ... 451
Adobe Encapsulated Postscript Export (.eps) ... 451
Adobe Illustrator Vector Graphic (.ai) ... 451
Adobe Illustrator Vector Graphic Export (.ai) ... 451
Adobe Photoshop Document (.psd) ... 452
Adobe Portable Document 2D Export (.pdf) ... 452
Adobe Portable Document 3D Export (.pdf) ... 453
Autodesk Animator Graphic (.cel) ... 458

Copyright © Right Hemisphere 2007. All Rights Reserved.

DirectX DirectDraw Surface (.dds) ... 458
EA/Amiga Interchange File Format (.iff) ... 458
Flexible Precision Buffer Map (.flx) ... 459
FLIC Animator Animation (.flc) ... 459
FLIC Animator Animation (.fli) ... 459
Graphics Interchange Format (.gif) ... 460
JPEG 2000 J2K (.j2k) ... 460
JPEG 2000 JP2 (.jp2) ... 460
JPEG 2000 JP2 Export (.jp2) ... 461
JPEG 2000 JPC (.jpc) ... 462
JPEG 2000 JPC Export (.jpc) ... 462
JPEG 2000 JPX (.jpx) ... 463
JPEG Image (.jpeg, .jpg) ... 463
JPEG Image Export (.jpeg, .jpg) ... 463
Maya Interchange File Format (.iff) ... 464
Maya Interchange File Format Export (.iff) ... 464
OpenEXR Bitmap (.exr) ... 465
OpenEXR Bitmap Export (.exr) ... 466
Portable Network Graphics (.png) ... 467
Portable Network Graphics Export (.png) ... 467
Portable Pixelmap Graphic (.ppm) ... 468
Portable Pixelmap Graphic Export (.ppm) ... 468
Publisher's Paintbrush Bitmap Graphic (.pcx) ... 468
Radiance Picture Format (.hdr) ... 468
Scalable Vector Graphics (.svg) ... 469
Scalable Vector Graphics Export (.svg) ... 469
Shockwave Flash Object (.swf) ... 470
Shockwave Flash Object Export (.swf) ... 470
Silicon Graphics Image (.rgb, .rgba, .int, .inta) ... 471
SOFTIMAGE Picture (.pic) ... 471
Tagged Image File Format (.tif, .tiff) ... 472
Tagged Image File Format Export (.tif, .tiff) ... 472
TGA File (.tga) ... 473
TGA File Export (.tga) ... 473
Windows Bitmap Graphic (.bmp, dib) ... 474
Windows Bitmap Graphic Export (.bmp, .dib) ... 474
Windows Cursor File (.cur) ... 475
Windows Icon File (.ico) ... 475
Windows Metafile (.wmf) ... 475
Windows Run Length Encoded Bitmap (.rle) ... 475

Appendix B: 3D File Formats 476

AOFF File Format (.geo) ... 478
AOFF File Format Export (.geo) ... 478
Autodesk 3D Studio ASCII (.asc) ... 479
Autodesk 3D Studio ASCII Export (.asc) ... 479
Autodesk 3D Studio Import (.3ds) ... 480
Autodesk 3D Studio Export (.3ds) ... 481
Autodesk 3D Studio Max ASCII (.ase) ... 482
Autodesk 3D Studio Project Import (.prj) ... 482
Caligari trueSpace Object Import (.cob) ... 483
Caligari trueSpace Object Export (.cob) ... 484
Caligari trueSpace Scene Import (.scn) ... 485
CINEMA 4D (.c4d) ... 485
Collada File Import (.dae) ... 486
Collada File Export (.dae) ... 487
DirectX Model Export (.x) ... 488
DirectX Model Import (.x) ... 489
FiLMBOX Import (.fbx) ... 490
FiLMBOX Export (.fbx) ... 490

Copyright © Right Hemisphere 2007. All Rights Reserved.

Google SketchUp Document Import (.skp) ... 491
Google SketchUp Document Export (.skp) ... 492
HTML Document with 3D (.html) ... 493
Imagine Geometry (.iob) ... 494
ISO G Code Format (.iso, .nc) ... 494
LightWave 3D Binary and Object Export (.lwo, .lw) ... 495
LightWave 3D Binary and Object Import (.lwo, lw) ... 496
LightWave Scene Export (.lws) ... 497
LightWave Scene Import (.lws) ... 498
Max File Export (.max) ... 499
Max File Import (.max) ... 501
Maya ASCII Scene Export (.ma) ... 503
Maya ASCII Scene Import (.ma) ... 504
Maya Binary Scene Export (.mb) ... 506
Maya Binary Scene Import (.mb) ... 507
Nendo Files (.ndo) ... 508
Object File Format Vector Graphics (.off) ... 508
Object File Format Vector Graphics Export (.off) ... 508
Open Inventor File Export (.iv) ... 509
Open Inventor File Import (.iv) ... 509
OpenFlight Scene Description Database (.flt) ... 510
OpenFlight Scene Description Database Export (.flt) ... 511
OpenGL CPP Code Export (.cpp) ... 512
Points File (.pts) ... 514
Polygon File Format (.ply) ... 514
Portable Graymap Graphics File Import (.pgm) ... 514
POV-Ray RAW Triangle (.raw) ... 515
POV-Ray RAW Triangle Export (.raw) ... 515
Power Render Object (.pro) ... 515
Protein Data Bank Import (.pdb) ... 516
Quake Character Model I (.mdl) ... 518
Quake Character Model II (.md2) ... 518
Quake Character Model III (.md3) ... 519
Quake Map File (.map) ... 519
Quicktime 3D Metafile (.3dm, .3dmf) ... 519
RAX Extended RAW Triangles (.rax) ... 520
Rhinoceros 3D Model Export (.3dm) ... 521
Rhinoceros 3D Model Import (.3dm) ... 522
Right Hemisphere Binary (.rh) ... 523
Right Hemisphere Binary Export (.rh) ... 523
Shockwave 3D File Export (.w3d) ... 525
Shockwave Web Page Export (.html) ... 526
Silo3D Import (.sia) ... 527
Silo3D Export (.sia) ... 527
SOFTIMAGE|XSI (.xsi) ... 528
SOFTIMAGE|XSI Export (.xsi) ... 528
Stereolithography File (.stl) ... 530
Stereolithography Rapid Prototyping Data Export (.stl) ... 531
Universal 3D Export (.u3d) ... 532
Universal 3D Import (.u3d) ... 534
VRML Worlds Export (.wrl, .vrml) ... 535
VRML Worlds Import (.wrl, .vrml) ... 536
Wavefront Object Export (.obj) ... 538
Wavefront Object Import (.obj) ... 539
XAML Export (.xaml) ... 540

Appendix C: Audio File Formats **542**

Audio Interchange Format (.aif, .aiff) ... 543
MPEG Audio File Format (.mpa, .mp2, .mp3) ... 543
Musical Instrument Digital Interface (.mid, .midi) ... 543

Copyright © Right Hemisphere 2007. All Rights Reserved.

RIFF MIDI File (.rmi) ... 544
Sound Format (.snd) ... 544
Sun/NeXT/DEC Audio (.au) ... 544
Waveform Audio (.wav) ... 544

Appendix D: Video File Formats 545

Advanced Streaming Format (.asf) ... 546
Audio Video Interleave Animation (.avi) ... 546
Audio Video Interleave Animation Export (.avi) ... 547
Moving Pictures Expert Group Video Format (.m1v, .mpeg, .mpg) ... 547

Appendix E: Motion Capture File Formats 548

BioVision Hierarchical Data and Character Studio Sub-Format Export (.bvh) ... 549
BioVision Hierarchical Data and Character Studio Sub-Format Import (.bvh) ... 551
Character Studio Export (.csm) ... 552
Character Studio Import (.csm) ... 552
Coordinate 3D Import (.c3d) ... 553
Hierarchical Translations and Rotations Import (.htr) ... 553
Tracked Row Binary Import (.trb) ... 554
Tracked Row Character Export (.trc) ... 554
Tracked Row Character Import (.trc) ... 554

Appendix F: Material File Formats 555

Autodesk 3D Studio Material (.mli) ... 556
Right Hemisphere Material (.rhm) ... 556
Right Hemisphere Material Export (.rhm) ... 556
Wavefront Material (.mtl) ... 557

Appendix G: Shader File Formats 558

Real-Time Shader (.fx) ... 559
Right Hemisphere Shader (.rhs) ... 559

Appendix H: CAD File Formats 560

AutoCAD Design Web Format Import (.dwf) ... 562
AutoCAD Design Web Format Export (.dwf) ... 563
AutoCAD Drawing Interchange Export (.dxf) ... 564
AutoCAD Drawing Interchange Import (.dxf) ... 565
AutoCAD Drawing Object Import (.dwg) ... 567
AutoCAD Drawing Object Export (.dwg) ... 569
AutoCAD Sheet Set File Import (.dst) ... 570
Autodesk Inventor Assembly Import (.iam) ... 571
Autodesk Inventor Part Import (.ipt) ... 573
CADKEY Advanced Design Language Import (.cdl) ... 575
CATIA Import (.cgr, .dlv, .model, .session) ... 576
CATIA5 Assembly and Part Import (.catpart, .catproduct) ... 581
Computer Graphics Metafile Export (.cgm) ... 588
Computer Graphics Metafile Import (.cgm) ... 589
Granite File Import (.g) ... 590
Hewlett-Packard Graphics Library Import (.hpgl, .plt,) ... 593
IGES Format Import (.iges, .igs) ... 594
JT File Export (.jt) ... 600
JT File Import (.jt) ... 601
Lattice XVL Structure and Geometry Import (.xv0, .xv3) ... 606
MicroStation CAD Graphic Import (.dgn) ... 609
Neutral Part File Import (.neu) ... 611
Parasolid CAD File Import (.x_b, .x_t, .xmt, .xmt_txt) ... 617
Pro/ENGINEER Assembly Import (.asm) ... 623
Pro/ENGINEER Part Import (.prt*, .xpr) ... 629
SDRC I-DEAS Model Import (.arc, .mf1) ... 635
SDRC I-DEAS Package Import (.pkg) ... 637

Copyright © Right Hemisphere 2007. All Rights Reserved.

SDRC I-DEAS Universal Import (.unv) ... 639
SolidEdge 3D CAD Model Part Import (.par) ... 641
SolidWorks Assembly and Part Import (.sldasm, .sldlfp, .sldprt) ... 643
SolidWorks Drawing (.slddrw) ... 645
Standard ACIS Text Import (.sat) ... 647
Standard ACIS Binary Import (.sab) ... 653
STEP Files Import (.step, .stp) ... 659
Unigraphics Parts and Assemblies Import (.prt) ... 665
VDA File Import (.vda) ... 670

Appendix I: Miscellaneous File Formats **673**

Text File (.txt) ... 674
WinRAR Compressed Archive (.rar) ... 674
ZIP Archive (.zip) ... 675

Index **677**

Copyright © Right Hemisphere 2007. All Rights Reserved.

Introduction



Welcome to Right Hemisphere's Deep Exploration CAD Edition and Standard Edition User Reference.

Deep Exploration is a standalone application used to manage and author 2D, 3D, animation, video, and audio assets residing on a computer or network. With it, you can search, view and manage all your assets in one program, repurpose 3D assets for use in Web pages, training, sales presentations and marketing, and create interactive 3D content for Web-based presentations.

This reference contains detailed information about all the features and capabilities of Deep Exploration and the Deep Exploration modules, and is organized mainly by functional areas. The User Interface (on page 246) section gives you a guide to program controls and where to find them.

If you have already used previous versions of this program, you might want to start here: Deep Exploration Overview (on page 32).

If you are new to this software, this would be a good place to start: Getting Started with Deep Exploration (on page 36).

You can find a guide to using the online reference here: Using the Reference Online (on page 20), and below is a list of important introductory topics.

- Creating New Scenes (on page 38).
- Opening Files (on page 39).
- Importing Files (on page 40).
- Searching for Files (on page 48).
- Managing Files, Themes and Thumbnails (on page 52)
- Merging Files (on page 53).
- Reloading Files (on page 54).
- Saving Files (on page 55).
- Viewing Scenes (on page 61).
- Objects and Materials (on page 87).
- Animation (on page 109).
- Audio and Video Files (on page 114).
- Benchmarking a File (on page 115).
- CADTools (on page 116).
- Callouts (on page 135).
- Cutting and Cross-Sectioning (on page 147).
- Drawing and Markup Tools (on page 151).

Copyright © Right Hemisphere 2007. All Rights Reserved.

- Embedding Content (on page 161).
- Illustration Tools (on page 162).
- Layers (on page 169).
- Markups (on page 151).
- Measurements (on page 171).
- High Dynamic Range Images (on page 176).
- Plugin Manager (on page 180).
- Primitives and Modifiers (on page 182).
- Publishing Web Pages (on page 183).
- Realight Tool (on page 184).
- Rendering Scenes. (on page 188)
- Slide Shows (on page 191).
- Steps (on page 194).
- UV Mapping (on page 198).
- Gateway Module (on page 205).
- JT PMI Module (on page 220).
- PDF Publishing Module (on page 223).
- Closing the Application (on page 245).

Copyright © Right Hemisphere 2007. All Rights Reserved.

Copyright and Trademarks

Copyright © 1999-2007 Right Hemisphere.
All rights reserved.

This software and any accompanying documentation contain the proprietary information of Right Hemisphere and its licensors. This software and documentation are provided under a license agreement containing restrictions on their use, disclosure, reproduction, transmission and distribution, and are protected by copyright law. As stated in the license agreement, reverse engineering of the software is prohibited.

Due to continued product development, the information contained in the documentation may change. Right Hemisphere does not warrant the documentation to be error-free. If you find any errors in or other problems with the documentation, please report them to Right Hemisphere in writing.

The product and company names appearing in this software and documentation may be trademarks or registered trademarks of Right Hemisphere and third parties.

- Portions of this software are based in part on OpenEXR. (c) 2002, Industrial Light & Magic, a division of Lucas Digital Ltd. LLC. All rights reserved.
- Portions of this software are based in part on the JasPer Software. (c) 1999-2000, Image Power, Inc. and the University of British Columbia. (c) 2001 Michael David Adams. All rights reserved.
- Portions of this software are based in part on the NVIDIA CG Shader Library. (c) 2002 NVIDIA Corporation. All rights reserved.
- Portions of this software are based in part on the TIFF Library. (c) 1988-1997 Sam Leffler. (c) 1991-1997 Silicon Graphics, Inc.
- Portions of this software are based in part on PKWARE. (c) 1991, 1992, 1994 and 1995 PKWARE Inc. All rights reserved.
- Portions of this software are based in part on TTF Foundations. (c) 1996-2005 Trade and Technologies France. All rights reserved.
- Portions of this software are based in part on the Autodesk DWF Toolkit. (c) 1996-2005 Autodesk, Inc. All rights reserved.

Right Hemisphere.

support@righthemisphere.com (mailto:support@righthemisphere.com)
http://www.righthemisphere.com (http://www.righthemisphere.com)

The following notices are provided as required by certain of Right Hemisphere's agreements with its licensors. They do not govern the use, disclosure, reproduction, transmission or distribution of this software as a whole. For information concerning the license to this software as a whole, see the end user or functionally similar license agreement provided by Right Hemisphere in conjunction with this software.

OpenEXR License

Copyright (c) 2002, Industrial Light & Magic, a division of Lucas Digital Ltd. LLC.

All rights reserved.

Redistribution and use in source and binary forms, with or without modification, are permitted provided that the following conditions are met:

- Redistributions of source code must retain the above copyright notice, this list of conditions and the following disclaimer.
- Redistributions in binary form must reproduce the above copyright notice, this list of conditions and the following disclaimer in the documentation and/or other materials provided with the distribution.

- Neither the name of Industrial Light & Magic nor the names of its contributors may be used to endorse or promote products derived from this software without specific prior written permission.

THIS SOFTWARE IS PROVIDED BY THE COPYRIGHT HOLDERS AND CONTRIBUTORS "AS IS" AND ANY EXPRESS OR IMPLIED WARRANTIES, INCLUDING, BUT NOT LIMITED TO, THE IMPLIED WARRANTIES OF MERCHANTABILITY AND FITNESS FOR A PARTICULAR PURPOSE ARE DISCLAIMED. IN NO EVENT SHALL THE COPYRIGHT OWNER OR CONTRIBUTORS BE LIABLE FOR ANY DIRECT, INDIRECT, INCIDENTAL, SPECIAL, EXEMPLARY, OR CONSEQUENTIAL DAMAGES (INCLUDING, BUT NOT LIMITED TO, PROCUREMENT OF SUBSTITUTE GOODS OR SERVICES; LOSS OF USE, DATA, OR PROFITS; OR BUSINESS INTERRUPTION) HOWEVER CAUSED AND ON ANY THEORY OF LIABILITY, WHETHER IN CONTRACT, STRICT LIABILITY, OR TORT (INCLUDING NEGLIGENCE OR OTHERWISE) ARISING IN ANY WAY OUT OF THE USE OF THIS SOFTWARE, EVEN IF ADVISED OF THE POSSIBILITY OF SUCH DAMAGE.

JasPer Software License

Copyright (c) 1999-2000, Image Power, Inc. and the University of British Columbia.

Copyright (c) 2001 Michael David Adams.

All rights reserved.

IMAGE POWER JPEG-2000 PUBLIC LICENSE

GRANT

Permission is hereby granted, free of charge, to any person (the "User") obtaining a copy of this software and associated documentation, to deal in the JasPer Software without restriction, including without limitation the right to use, copy, modify, merge, publish, distribute, sublicense, and/or sell copies of the JasPer Software (in source and binary forms), and to permit persons to whom the JasPer Software is furnished to do so, provided further that the License Conditions below are met.

License Conditions

A. Redistributions of source code must retain the above copyright notice, and this list of conditions, and the following disclaimer.

B. Redistributions in binary form must reproduce the above copyright notice, and this list of conditions, and the following disclaimer in the documentation and/or other materials provided with the distribution.

C. Neither the name of Image Power, Inc. nor any other contributor (including, but not limited to, the University of British Columbia and Michael David Adams) may be used to endorse or promote products derived from this software without specific prior written permission.

D. User agrees that it shall not commence any action against Image Power, Inc., the University of British Columbia, Michael David Adams, or any other contributors (collectively "Licensors") for infringement of any intellectual property rights ("IPR") held by the User in respect of any technology that User owns or has a right to license or sublicense and which is an element required in order to claim compliance with ISO/IEC 15444-1 (i.e., JPEG-2000 Part 1). "IPR" means all intellectual property rights worldwide arising under statutory or common law, and whether or not perfected, including, without limitation, all (i) patents and patent applications owned or licensable by User; (ii) rights associated with works of authorship including copyrights, copyright applications, copyright registrations, mask work rights, mask work applications, mask work registrations; (iii) rights relating to the protection of trade secrets and confidential information; (iv) any right analogous to those set forth in subsections (i), (ii), or (iii) and any other proprietary rights relating to intangible property (other than trademark, trade dress, or service mark rights); and (v) divisions, continuations, renewals, reissues and extensions of the foregoing (as and to the extent applicable) now existing, hereafter filed, issued or acquired.

Copyright © Right Hemisphere 2007. All Rights Reserved.

E. If User commences an infringement action against any Licensor(s) then such Licensor(s) shall have the right to terminate User's license and all sublicenses that have been granted hereunder by User to other parties.

F. This software is for use only in hardware or software products that are compliant with ISO/IEC 15444-1 (i.e., JPEG-2000 Part 1). No license or right to this Software is granted for products that do not comply with ISO/IEC 15444-1. The JPEG-2000 Part 1 standard can be purchased from the ISO.

THIS DISCLAIMER OF WARRANTY CONSTITUTES AN ESSENTIAL PART OF THIS LICENSE. NO USE OF THE JASPER SOFTWARE IS AUTHORIZED HEREUNDER EXCEPT UNDER THIS DISCLAIMER. THE JASPER SOFTWARE IS PROVIDED BY THE LICENSORS AND CONTRIBUTORS UNDER THIS LICENSE ON AN ``AS-IS'' BASIS, WITHOUT WARRANTY OF ANY KIND, EITHER EXPRESSED OR IMPLIED, INCLUDING, WITHOUT LIMITATION, WARRANTIES THAT THE JASPER SOFTWARE IS FREE OF DEFECTS, IS MERCHANTABLE, IS FIT FOR A PARTICULAR PURPOSE OR IS NON-INFRINGING. THOSE INTENDING TO USE THE JASPER SOFTWARE OR MODIFICATIONS THEREOF FOR USE IN HARDWARE OR SOFTWARE PRODUCTS ARE ADVISED THAT THEIR USE MAY INFRINGE EXISTING PATENTS, COPYRIGHTS, TRADEMARKS, OR OTHER INTELLECTUAL PROPERTY RIGHTS. THE ENTIRE RISK AS TO THE QUALITY AND PERFORMANCE OF THE JASPER SOFTWARE IS WITH THE USER. SHOULD ANY PART OF THE JASPER SOFTWARE PROVE DEFECTIVE IN ANY RESPECT, THE USER (AND NOT THE INITIAL DEVELOPERS, THE UNIVERSITY OF BRITISH COLUMBIA, IMAGE POWER, INC., MICHAEL DAVID ADAMS, OR ANY OTHER CONTRIBUTOR) SHALL ASSUME THE COST OF ANY NECESSARY SERVICING, REPAIR OR CORRECTION. UNDER NO CIRCUMSTANCES AND UNDER NO LEGAL THEORY, WHETHER TORT (INCLUDING NEGLIGENCE), CONTRACT, OR OTHERWISE, SHALL THE INITIAL DEVELOPER, THE UNIVERSITY OF BRITISH COLUMBIA, IMAGE POWER, INC., MICHAEL DAVID ADAMS, ANY OTHER CONTRIBUTOR, OR ANY DISTRIBUTOR OF THE JASPER SOFTWARE, OR ANY SUPPLIER OF ANY OF SUCH PARTIES, BE LIABLE TO THE USER OR ANY OTHER PERSON FOR ANY INDIRECT, SPECIAL, INCIDENTAL, OR CONSEQUENTIAL DAMAGES OF ANY CHARACTER INCLUDING, WITHOUT LIMITATION, DAMAGES FOR LOSS OF GOODWILL, WORK STOPPAGE, COMPUTER FAILURE OR MALFUNCTION, OR ANY AND ALL OTHER COMMERCIAL DAMAGES OR LOSSES, EVEN IF SUCH PARTY HAD BEEN INFORMED, OR OUGHT TO HAVE KNOWN, OF THE POSSIBILITY OF SUCH DAMAGES. THE JASPER SOFTWARE AND UNDERLYING TECHNOLOGY ARE NOT FAULT-TOLERANT AND ARE NOT DESIGNED, MANUFACTURED OR INTENDED FOR USE OR RESALE AS ON-LINE CONTROL EQUIPMENT IN HAZARDOUS ENVIRONMENTS REQUIRING FAIL-SAFE PERFORMANCE, SUCH AS IN THE OPERATION OF NUCLEAR FACILITIES, AIRCRAFT NAVIGATION OR COMMUNICATION SYSTEMS, AIR TRAFFIC CONTROL, DIRECT LIFE SUPPORT MACHINES, OR WEAPONS SYSTEMS, IN WHICH THE FAILURE OF THE JASPER SOFTWARE OR UNDERLYING TECHNOLOGY OR PRODUCT COULD LEAD DIRECTLY TO DEATH, PERSONAL INJURY, OR SEVERE PHYSICAL OR ENVIRONMENTAL DAMAGE ("HIGH RISK ACTIVITIES"). LICENSOR SPECIFICALLY DISCLAIMS ANY EXPRESS OR IMPLIED WARRANTY OF FITNESS FOR HIGH RISK ACTIVITIES. USER WILL NOT KNOWINGLY USE, DISTRIBUTE OR RESELL THE JASPER SOFTWARE OR UNDERLYING TECHNOLOGY OR PRODUCTS FOR HIGH RISK ACTIVITIES AND WILL ENSURE THAT ITS CUSTOMERS AND END-USERS OF ITS PRODUCTS ARE PROVIDED WITH A COPY OF THE NOTICE SPECIFIED IN THIS SECTION.

NVIDIA CG Shader Library License

Copyright (c) 2002, NVIDIA Corporation.

All rights reserved.

NVIDIA Corporation("NVIDIA") supplies this software to you in consideration of your agreement to the following terms, and your use, installation, modification or redistribution of this NVIDIA software constitutes acceptance of these terms. If you do not agree with these terms, please do not use, install, modify or redistribute this NVIDIA software.

Copyright © Right Hemisphere 2007. All Rights Reserved.

In consideration of your agreement to abide by the following terms, and subject to these terms, NVIDIA grants you a personal, non-exclusive license, under NVIDIA's copyrights in this original NVIDIA software (the "NVIDIA Software"), to use, reproduce, modify and redistribute the NVIDIA Software, with or without modifications, in source and/or binary forms; provided that if you redistribute the NVIDIA Software, you must retain the copyright notice of NVIDIA, this notice and the following text and disclaimers in all such redistributions of the NVIDIA Software. Neither the name, trademarks, service marks nor logos of NVIDIA Corporation may be used to endorse or promote products derived from the NVIDIA Software without specific prior written permission from NVIDIA. Except as expressly stated in this notice, no other rights or licenses express or implied, are granted by NVIDIA herein, including but not limited to any patent rights that may be infringed by your derivative works or by other works in which the NVIDIA Software may be incorporated. No hardware is licensed hereunder.

THE NVIDIA SOFTWARE IS BEING PROVIDED ON AN "AS IS" BASIS, WITHOUT WARRANTIES OR CONDITIONS OF ANY KIND, EITHER EXPRESS OR IMPLIED, INCLUDING WITHOUT LIMITATION, WARRANTIES OR CONDITIONS OF TITLE, NON-INFRINGEMENT, MERCHANTABILITY, FITNESS FOR A PARTICULAR PURPOSE, OR ITS USE AND OPERATION EITHER ALONE OR IN COMBINATION WITH OTHER PRODUCTS.

IN NO EVENT SHALL NVIDIA BE LIABLE FOR ANY SPECIAL, INDIRECT, INCIDENTAL, EXEMPLARY, CONSEQUENTIAL DAMAGES (INCLUDING, BUT NOT LIMITED TO, LOST PROFITS; PROCUREMENT OF SUBSTITUTE GOODS OR SERVICES; LOSS OF USE, DATA, OR PROFITS; OR BUSINESS INTERRUPTION) OR ARISING IN ANY WAY OUT OF THE USE, REPRODUCTION, MODIFICATION AND/OR DISTRIBUTION OF THE NVIDIA SOFTWARE, HOWEVER CAUSED AND WHETHER UNDER THEORY OF CONTRACT, TORT (INCLUDING NEGLIGENCE), STRICT LIABILITY OR OTHERWISE, EVEN IF NVIDIA HAS BEEN ADVISED OF THE POSSIBILITY OF SUCH DAMAGE.

TIFF License

Copyright (c) 1988-1997 Sam Leffler.

Copyright (c) 1991-1997 Silicon Graphics, Inc.

All rights reserved.

Permission to use, copy, modify, distribute, and sell this software and its documentation for any purpose is hereby granted without fee, provided that (i) the above copyright notices and this permission notice appear in all copies of the software and related documentation, and (ii) the names of Sam Leffler and Silicon Graphics may not be used in any advertising or publicity relating to the software without the specific, prior written permission of Sam Leffler and Silicon Graphics.

THE SOFTWARE IS PROVIDED "AS-IS" AND WITHOUT WARRANTY OF ANY KIND, EXPRESS, IMPLIED OR OTHERWISE, INCLUDING WITHOUT LIMITATION, ANY WARRANTY OF MERCHANTABILITY OR FITNESS FOR A PARTICULAR PURPOSE.

IN NO EVENT SHALL SAM LEFFLER OR SILICON GRAPHICS BE LIABLE FOR ANY SPECIAL, INCIDENTAL, INDIRECT OR CONSEQUENTIAL DAMAGES OF ANY KIND, OR ANY DAMAGES WHATSOEVER RESULTING FROM LOSS OF USE, DATA OR PROFITS, WHETHER OR NOT ADVISED OF THE POSSIBILITY OF DAMAGE, AND ON ANY THEORY OF LIABILITY, ARISING OUT OF OR IN CONNECTION WITH THE USE OR PERFORMANCE OF THIS SOFTWARE.

Autodesk DWF Toolkit Disclaimer of Warranty

(c) 1996-2005 Autodesk, Inc.

All rights reserved.

The incorporated portions of the Autodesk DWF Toolkit are provided "AS IS" and without any warranty of any kind. AUTODESK DOES NOT MAKE AND HEREBY DISCLAIMS ANY EXPRESS OR IMPLIED WARRANTIES INCLUDING, BUT NOT LIMITED TO, THE WARRANTIES OF NON-INFRINGEMENT, MERCHANTABILITY OR FITNESS FOR A PARTICULAR PURPOSE, OR ARISING FROM A COURSE OF DEALING, USAGE, OR TRADE PRACTICE.

Copyright © Right Hemisphere 2007. All Rights Reserved.

CAD and Standard Editions

Deep Exploration is sold in two forms: the CAD Edition and the Standard Edition. The CAD Edition supports all functionality. However, the Standard Edition excludes certain functionality as described in the following table.

Note that when you install Deep Exploration Standard Edition, the 30-day trial period gives you CAD functionality for you to be able to trial the CAD Edition. When you license the product (on page 29), gain Standard Edition functionality and lose the CAD Edition functionality.

CAD and Standard Edition Differences

Functionality	Standard	CAD	Notes
Full error reporting	Y	Y	
Gateway Module (on page 205)	Y	Y	
PDF Publishing Module (on page 223)	Y	Y	
CADTools (on page 116)	N	Y	
Deep Publish (http://www.righthemisphere.com/deeppublish)	N	Y	Free with CAD Edition
Illustration (on page 162)	N	Y	
PMI Module (on page 220)	N	Y	
Realight (on page 184)	N	Y	
UV Mapping (on page 198)	N	Y	
Opening and importing supported CAD files	N	Y	Please see the appendices for further information on supported file formats.
Saving to supported CAD files	N	Y	Please see the appendices for further information on supported file formats.

Modules

Various modules are available for industry specific translation, authoring and publishing:

- Certain modules are available to enhance the functionality of Deep Exploration CAD and Standard Editions. For example, the Gateway and PDF Publishing modules.
- Certain modules are available to enhance the functionality of Deep Exploration CAD Edition. For example, the PMI Module.
- Certain modules are available to enhance the Standard Edition functionality. For example, the CADTools and Illustration modules.
- Certain modules are available for CAD file support for the Standard Edition.

Note 1: Deep Exploration is sold in two forms: the CAD Edition and the Standard Edition. The CAD Edition supports opening and importing all supported CAD file formats (on page 560). To obtain CAD file support, you can either purchase Deep Exploration CAD Edition, or purchase the individual CAD modules to use with the Deep Exploration Standard Edition.

Note 2: When importing files (on page 40), the available import options depend on the form of Deep Exploration you have installed; the CAD Edition or the Standard Edition with the various modules.

Copyright © Right Hemisphere 2007. All Rights Reserved.

Additional Modules: CAD and Standard Editions

Gateway Module (on page 205): Enables you to quickly and easily browse for assets and derivatives within Deep Server databases. This module is delivered free with Deep Exploration.

PDF Publishing Module (on page 223): Enables you to open, view, and save PDF documents containing 3D content.

Additional Modules: CAD Edition

PMI Module (on page 220): Enables you to extract and display all the Product Manufacturing Information (PMI), and any metadata associated with CATIA 5 and JT files.

Additional Modules: Standard Edition

CADTools Module (on page 116): A set of tools that provide functionality to optimize 3D objects for display and manipulation. Realight (on page 184) and UV Mapping (on page 198) functionality is also delivered with this module.

Illustration Module (on page 162): Used to render technical illustrations direct from almost any 3D model, providing high quality line-art and shaded technical illustrations.

CAD Modules: Standard Edition

CATIA Module (on page 560): Allows you to view, import, and apply settings to your CATIA supported file formats, and then save them to supported 2D and 3D file formats.

CATIA5 Module (on page 560): Allows you to view, import, and apply settings to your CATIA5 supported file formats, and then save them to supported 2D and 3D file formats.

CoreCAD Module (on page 560): Enables you to view, import, and apply settings to your CoreCAD supported file formats, and then save them to supported 2D and 3D file formats.

JT Module (on page 560): Allows you to view, import, and apply settings to your JT supported file formats, and then save them to supported 2D and 3D file formats.

Pro/E Module (on page 560): Used for viewing, importing, and applying settings to your Pro/E supported file formats, and publishing them to supported 2D and 3D file formats. Support for additional formats is available when you purchase the Pro/E module.

SDRC I-DEAS Module (on page 560): Enables you to view, import, and apply settings to your SDRC I-DEAS supported file formats, and then save them to supported 2D and 3D file formats.

Unigraphics Module (on page 560): Enables you to view, import, and apply settings to your Unigraphics supported file formats, and then save them to supported 2D and 3D file formats.

XVL Module (on page 560): Enables you to view, import, and apply settings to your XVL supported file formats, and then save them to supported 2D and 3D file formats.

Copyright © Right Hemisphere 2007. All Rights Reserved.

Conventions

Several user interface controls are utilized within the application, similar to the functionality in most Windows applications. These controls are graphical objects that represent the various properties of the interface components and functions. Some controls display and allow editing of particular values. Other controls start associated commands. Each control has a unique appearance and operation designed for a specific form of interaction.

Help

Help is accessed from the product menu and, depending on the product you are using, by pressing **F1**. Certain conventions are used within the product and documentation to make them easier to use.

Mouse Controls

The mouse is an intuitive way of interacting with the application. The buttons can be used singularly, in conjunction with each other, and in conjunction with other keys on your keyboard to perform a variety of functions via shortcuts (on page 433).

Pressing and holding both mouse buttons is used for a variety of navigation methods including zooming in and out from scenes.

Left-mouse button: Referred to simply as the 'mouse' or 'left-click'. It is used for a number of selection functions including selecting objects, menu commands, buttons, and check boxes.

Right-mouse button: Referred to as 'right-click'. It is used for displaying the right-click menus; the available commands differ depending on the position of the cursor in the interface.

Middle/wheel button: Pressing and holding the middle or wheel button is used to perform certain zoom functions (on page 434).

Product Menus

The product menus (on page 246) are your main means of interacting with the application. Each menu contains commands used to perform various functions that relate to the application. Many menus contain sub-menus and commands.

Submenu buttons 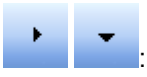: Indicates that the selected command includes a submenu.

On/off toggles : Indicates that the menu command is 'on'.

Either/or toggles : Indicates that the menu command is the one selected from a group of mutually exclusive commands.

Close buttons : Used to close the current user interface component. For example, the various application dialogs.

Ellipsis : Indicates that a dialog will appear from where you can select various options.

Keyboard shortcuts (on page 433): Menus display any available keyboard shortcuts to the right of the commands. For example, the File > Open command can be accessed via the keyboard shortcut CTRL+O.

Copyright © Right Hemisphere 2007. All Rights Reserved.

Special Controls

Several special user interface controls are utilized within Deep Exploration, similar to the functionality in most Windows applications. These controls are graphical objects that represent the various properties of the interface components and functions. Some controls display and allow editing of particular values. Other controls start associated commands. Each control has a unique appearance and operation designed for a specific form of interaction.

Spinners

A spinner is a control for numeric fields. You can click or drag the spinner arrows to increment or decrement the value.

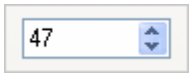

To change a value using a spinner, do any of the following:

- Click the spinner to increment or decrement the value.
- Drag up to increase the value, or drag down to decrease it.
- Press CTRL while you drag to increase the rate at which the value changes.

Edit Boxes

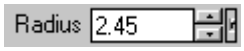

An edit box is a place where you can enter a value. This value can be a number or a string. Place the cursor over an edit box and press the mouse button to activate the edit box. Right-clicking over an edit box allows clipboard operations to be used with the edit box, such as Cut, Copy, Paste, Delete, and Select All.

Numeric edit boxes work in conjunction with spinners and sliders, each described below. The number of decimal places that are maintained in numeric edit boxes can be set in the Deep Exploration Configuration dialog.

Edit boxes that take numeric values can have mathematical expressions typed into them. For example if you wanted to enter the value 4 divided by 5 you would enter '4/5' (without the quotes), and when you press ENTER, the edit box is filled with 0.8. More information about using mathematical expressions in edit boxes can be found below. The valid mathematical operators are:

- * Multiply.
- + Add.
- - Subtract.
- / Divide.
- ^ Exponent.

Portions of the mathematical expressions can be grouped together with ( ). Operations within parentheses are evaluated first. For example:

- (4*5)+3
- 4/4.56
- (5+67)*(4/3)

You can also use the following mathematical functions:

- sqrt, abs, acos, asin, atan, cos, cosh, exp, log, log10, sin, sinh, tan, and tanh.

Note: All trigonometric functions use angles measured in radians.

Copyright © Right Hemisphere 2007. All Rights Reserved.

The following are examples of using mathematical functions:

- sqrt(0.5)
- acos(4+4)

The following constants are also defined:

- rand = a random number
- pi = 3.141592654
- rad = 3.141592654/180.0
- deg = 180.0/3.141592654
- mi = 100000.0/2.54/12.0/5280.0
- km = 5280.0*12.0*2.54/100000.0

Simply type the constant you want to use:

- rand
- (4*pi)

Sliders

Sliders work in a similar way to spinners but allow more control over the value.



To use a slider, do any of the following:

- Drag the slider arrow left to decrease the value.
- Drag the slider arrow right to increase the value.

Cyclical Dialog Fields

Many dialogs contain fields that can cycle through the options every time you click in the field.

Tabs

Tabs are analogous to the dividers in a notebook or the labels in a file cabinet. They define multiple pages for the same area of a window or dialog box. Each tab comprises a set of information or a group of controls that are displayed when you select the corresponding tab.

Drop Down Lists

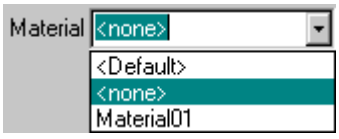

A combo box consists of a list box combined with either a static control or edit control. The list-box portion of the control can be displayed at all times or can only drop-down when you select the drop-down arrow next to the control.

The currently selected item (if any) in the list box is displayed in the static or edit control. In addition, if the combo box has the drop-down list style, you can type the initial character of one of the items in the list, and the list box, if visible, highlights the next item with that initial character.

Copyright © Right Hemisphere 2007. All Rights Reserved.

Buttons

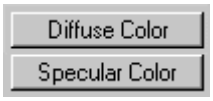

Buttons are controls that start actions or change properties. When you click a command button with the primary mouse button, a command is carried out. When you press the mouse button, the input focus - a dotted rectangle - moves to the command button, and the command button state changes to its pressed appearance. If you move the pointer off the command button while the mouse button remains pressed, the command button returns to its original state but still displays the input focus rectangle. If you move the pointer back over the command button while pressing the mouse button, the command button returns to its pressed state.

When you release the mouse button with the pointer on the command button, the command associated with the control starts. If the pointer is not on the control when you release the mouse button, no action occurs.

Option Buttons

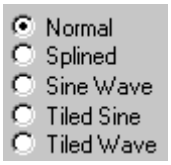

Option buttons represent a single choice within a limited set of mutually exclusive choices. That is, you can choose only one of a set of options. Option buttons appear as a set of small circles. When an option button choice is set, a dot appears in the middle of the circle. When the item is not the current setting, the circle next to the current setting is empty.

As with command buttons, the mouse interface for choosing an option button requires you to click the primary mouse button, either on the option button circle or on its label. When you press the mouse button, the input focus moves to the option button label, and the option button displays its pressed appearance. If you move the pointer off the option button before releasing the mouse button, the option button returns to its original state but retains the input focus. The option is not set until you release the mouse button while the pointer is over the control. In addition, repeated mouse clicks on the same option button do not toggle the button's state; you need to explicitly select another value in the group to change or restore a setting.

Check Boxes

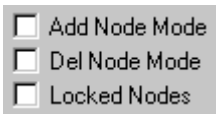

A check box represents an independent or non-exclusive choice. A check box can have one of three states:

- **Checked**—The associated value or property is set.
- **Cleared**—The associated value or property is not set.
- **Mixed value**—The associated value is set for some, but not all, elements of the selection.

A check box appears as a square box with an accompanying label. When the choice is set, a check mark appears in the box. When the choice is not set, the check box is empty

Copyright © Right Hemisphere 2007. All Rights Reserved.

When you click a check box with the primary mouse button, either in the check box or on its label, the check box is selected and its state is toggled. When you press the mouse button, the input focus moves to the control and the check box displays its pressed appearance. Like option buttons and other controls, if you move the pointer off the check box or its label while pressing the mouse button, the control's appearance returns to its original state and retains the input focus. The state of the check box does not change until the mouse button is released. To change a control's setting, the pointer must be over the check box or its label when you release the mouse button.

Documentation Conventions

Certain conventions are used within the documentation to make it easier to use:

- Commands, tools, and selections are displayed in **bold** typeface. For example, click **OK**.
- Menu and submenu commands are separated by the greater-than (>) sign. For example, **File > Open**.
- Specific keystrokes are represented in capitals. For example, DELETE.
- Instructions are displayed as numbered steps.
- Related section headings are displayed in *italic* typeface if the section is within the current Help topic.
- Related section headings are linked (underlined), to the appropriate section if it is located in another Help topic.
- Where the word 'the application' is mentioned, the content relates to the application that you are using.
- Where the word 'image' is mentioned, the content relates specifically to a 2D representation.
- Where the word 'scene', 'model', or 'object' is mentioned, the content relates specifically to a 3D representation.
- Where words are displayed within square brackets [ ], substitute the relevant text for the described action.
- Where the plus (+) and minus (-) keys are mentioned, they relate to the number pad and not the QWERTY section of the keyboard.
- Where modules are mentioned, the term refers to products for which modules may be purchased.

Copyright © Right Hemisphere 2007. All Rights Reserved.

Using the Reference Online

This reference gives you information about every aspect of the software. Each topic contains an overview discussion followed by a 'Procedures' section with steps for using a command or feature, and sometimes an 'Interface' section detailing controls and parameters for the user interface.

Interface

Topic Overview—Tells you the name of the feature, command, user interface control, or concept, and gives you a description.

Procedures—Contains steps for tasks that illustrate the typical use of the feature.

Interface—Describes the controls for this feature as they appear in the user interface, with a description of their behaviors and settings.

Finding Information Fast

The online information system (Help User Reference) is a compiled HTML Help file and is viewed using the HTML Help Viewer. This section explains how to retrieve information quickly. Detailed information on using the HTML Help Viewer is explained later in this document.

Use the Navigation pane in the Help Window to get to information quickly. The pane comprises the Contents, Index and Search tabs that let you use search techniques for finding the information you need.

Contents Tab

The Contents tab displays the main sections of this online system as book icons. When you click a book, it expands to show the list of topics contained within it, like chapters in hard-copy books.

If a book is expanded already, clicking on it collapses the topics.

Index Tab

The Index is an alphabetical listing of keywords found in each topic.

Keywords may be linked to more than one topic. You can also type the first few letters of a subject, the whole word or a number of words for which to search.

Search Tab

The Search tab summons a full-text search engine that operates on a database of every word in the reference, created when the HTML Help system was compiled. You can use tools on the Search tab to find the Help topics containing any word or phrase.

Procedures

To go to a topic from the Contents tab:

1. Click the Contents tab to display the table of contents.
2. Click the book icon representing the area for which you want information. The page icons for the book expand below representing all the topics for the book's feature area.
3. Click the page icon for the topic you want.

Copyright © Right Hemisphere 2007. All Rights Reserved.

To go to a topic from the Index tab:

1. Click the Index tab to display the Help Index.
2. Do one of the following:
   - Double-click the keywords for which you want to to find information. The topic is displayed in the right pane. The topic is displayed in the right pane.
   - Type the subject you want to find in the 'Type in the keyword to find' field and press ENTER. The topic is either displayed in the right pane or, if a topic list is displayed, click the topic you require and click **Display**.

Using the HTML Help Viewer

This online information system is a compiled HTML Help (.chm) file; you view it using the HTML Help Viewer. The HTML Help Viewer is a two-pane window and a toolbar:

- The Navigation pane is on the left side of the window. It contains three navigational tabs, for Contents, Index and Search.
- The Topic pane is on the right side of the window. It displays the selected or default Help topic and is the pane from which you are reading right now.
- The Help Viewer toolbar comprises tools from which you can choose to help you use the Help Viewer and search for information.

Following are some tips on how to find more information when using the HTML Help Viewer:

- To link to another topic or a list of other topics, click the colored, underlined words in the Topic pane.
- Right-click the Contents tab or the Topic pane for shortcut menu commands.

Note: Most of information about using the HTML Help Viewer has been supplied directly by Microsoft. It has been made freely available for inclusion in HTML Help projects such as this one. This information has been edited and reformatted to match that of the other online information system delivered with this product.

Procedures

To find a Help topic:

1. In the Navigation pane, do one of the following:
   - Click the Contents tab to browse through a table of contents.
   - Click the Index tab, and then type a word or scroll through the list to see a list of index entries.

     Note: Topics are often indexed under more than one entry.

   - Click the Search tab, and then type the word to locate every occurrence of a word or phrase that may be contained in a Help file.
2. Click the contents entry, index entry, or search results entry to display the corresponding topic.

To see where the current topic fits in the table of contents:

While viewing the Index and Search tabs, press ALT+C. The Contents pane is displayed with the current topic highlighted.

Copyright © Right Hemisphere 2007. All Rights Reserved.

To copy a Help topic:

1. Right-click in the pane of the topic you want to copy, and then click **Select All**.
2. Right-click again, and then click **Copy**.
3. Paste the copied topic into the document you require.

To copy only part of a topic:

Select the text you want to copy, right-click, and then click **Copy**.

To print the current Help topic, do one of the following:

- Click the **Print** button on the toolbar, select the print options you require, and then click **OK**.
- Choose **Options > Print** on the toolbar, select the print options you require, and then click **OK**.
- Right-click a topic in the Topic pane and then click **Print** twice.
- Right-click a topic name on the Contents tab, click **Print**, select the print options you require, and then click **OK**.

To hide or show the Navigation pane:

On the toolbar, click **Hide** or **Show** to close or display the Navigation pane.

If you close the Help Viewer with the Navigation pane hidden, it is remains hidden when you next open the Help.

HTML Help Viewer Toolbar

File > Help
Keyboard F1



The Help Viewer toolbar contains a number of useful tools including print, refresh, and highlighting functionality.

Interface

Hide / Show 

—Hides or shows the Navigation pane.

Back 

—Moves to the previously viewed topic.

Print 

—Prints the current topic if the Topic pane is active. If the table of contents is active on the Navigation pane, you can choose to print the current topic, or the topic and its subtopics.

Options 

—Used to display the 'options' menu and modify the viewing settings.

- **Hide / Show Tabs**—Hides or shows the Navigation pane.

Copyright © Right Hemisphere 2007. All Rights Reserved.

- **Back**—Moves to the previously viewed topic.
- **Forward**—Moves to the topic viewed after the previously viewed topic.
- **Home**—Displays the main topic of this online system.
- **Stop**—Halts the display of a topic.
- **Refresh**—Refreshes the Help display.
- **Internet Options**—Opens the Internet Options dialog and is used to modify browser settings. We recommend not using this command.
- **Print**—Prints the current topic if the Topic pane is active. If the table of contents is active on the Navigation pane, you can choose to print the current topic, or the topic and its subtopics.
- **Search Highlight On/Off**—Toggles highlighting on and off for each occurrence of a word or phrase found with a search.

Searching for Help Topics

A basic search consists of the word or phrase you want to find. You can use Boolean, wildcard, and nested expressions. You can also limit the search to previous results, match similar words, or search topic titles only to further define your search.

The basic rules for formulating queries are:

- Searches are not case-sensitive, so you can type your search in uppercase or lowercase characters.
- You may search for any combination of letters (a through z) and numbers (0 through 9).
- Punctuation marks such as the period, colon, semicolon, comma, and hyphen are ignored during a search.
- Group the elements of your search using double quotes or parentheses to set apart each element. You cannot search for quotation marks.

Note: If you are searching for a file name with an extension, you should group the entire string in double quotes, ("filename.ext"). Otherwise, the period breaks the file name into two separate terms and, as the default operation between terms is AND, the logical equivalent to "filename AND ext." is created.

Searching for Words or Phrases: Using Wildcards

You can search for words or phrases and use wildcard expressions. Wildcard expressions allow you to search for one or more characters using a question mark or asterisk.

You can select the Match Similar Words check box to include minor grammatical variations for the phrase you search.

The table below describes the results of these different kinds of searches.

Search for	Example	Results
A single word	select	Topics that contain the word, 'select'. Note that grammatical variations, such as 'selector' and 'selection' are also found.
A phrase	"new operation" or new operation	Topics that contain the literal phrase 'new operation' and all its grammatical variations. Without the quotation marks, the query is equivalent to specifying "new AND operation", which finds topics containing both of the individual words instead of the phrase.
Wildcard expressions	esc* or 80?86	Topics that contain the terms 'ESC', 'escape', 'escalation', and so on. The asterisk cannot be the only character in the term. Topics that contain the terms '80186', '80286', '80386', and so on. The question mark cannot be the only character in the term.

Copyright © Right Hemisphere 2007. All Rights Reserved.

Defining Search Terms: Using Boolean Expressions

The AND, OR, NEAR and NOT operators enable you to precisely define your search by creating a relationship between search terms. The following table shows how you can use each of these operators. If no operator is specified, AND is used. For example, the query "spacing border printing" is equivalent to "spacing AND border AND printing".

Search for	Example	Results
Both terms in the same topic.	operation AND parameter	Topics containing both the words 'operation' and 'parameter'.
Either term in a topic.	operation OR parameter	Topics containing either the word 'operation', or the word 'parameter' or both.
The first term without the second term.	operation NOT parameter	Topics containing the word 'operation', but not the word parameter.
Both terms in the same topic, close together.	operation NEAR parameter	Topics containing the word 'operation' within eight words of the word 'parameter'.

Note: The |, &, and ! characters do not work as Boolean operators (you must use OR, AND, and NOT).

Using Nested Expressions

Nested expressions allow you to create complex searches for information. For example, "XML AND ((operation OR parameter) NEAR configuration)" finds topics containing the word 'XML' along with the words 'operation' and 'configuration' close together, or containing 'XML' along with the words 'parameter' and 'configuration' close together.

The basic rules for searching Help topics using nested expressions are:

- You can use parentheses to nest expressions within a query. The expressions in parentheses are evaluated before the rest of the query.
- If a query does not contain a nested expression, it is evaluated from left to right. For example. "XML not operation OR parameter" finds topics containing the word 'XML' without the word 'operation', or topics containing the word 'parameter'. On the other hand, "XML not (operation OR parameter)" finds topics containing the word 'XML' without either of the words 'operation' or 'parameter'.
- You cannot nest expressions more than five levels deep.

If you search for words within the HTML files, all HTML topic files are searched, including any that are not listed in the table of contents.

If you search for words that are similar to your search term, you can include minor grammatical variations for the phrase you search. For example, a search on the word 'add' finds 'add', 'adds', and 'added'. This feature only locates variations of the word with common suffixes. For example, a search on the word 'add' finds 'added', but not 'additive'.

If you search only the last group of topics you searched, you can narrow a search that results in too many topics found. You can also search through your results list from a previous search.

When searching for words in Help topics, you can have each occurrence of the word or phrase highlighted in the topics that are found. If you are viewing a long topic, only the first 500 instances of a search word or phrase are highlighted.

Copyright © Right Hemisphere 2007. All Rights Reserved.

Procedures

To go to a topic from the Search tab:

1. Click the Search tab, and then type the word or phrase you want to find.
2. Click the 'Boolean' button to the right of the text field, and then one of the operator names to add Boolean operators to your search.
3. If required, do one of the following:
   - To define a search precisely, use a wildcard expression, nested expression, and Boolean operators.
   - To request similar word matches, search only the topic titles or search the results of a previous search.
4. Click **List Topics**, choose the topic you want, and then click **Display**.

Note: To sort the topic list alphabetically, click the Title column heading.

To search for words in the titles of HTML files:

1. Click the Search tab, type the word or phrase you want to find.
2. Select the Search titles only check box.
3. Click **List Topics**, choose the topic you want, and then click **Display**.

To find words similar to your search term:

1. Click the Search tab, type the word or phrase you want to find.
2. Select the Match similar words check box.
3. Click **List Topics**, choose the topic you want, and then click **Display**.

To search only the last group of topics you searched:

1. On the Search tab, select the Search previous results check box.
2. Click **List Topics**, choose the topic you want, and then click **Display**.

Note: If you want to search through all of the files in a Help system, this check box must be off. If you previously used this feature, the Search tab opens with this check box turned on.

To repeat an earlier search:

Click the down arrow on the text-entry field, select a previously used search string, and then click **List Topics**.

To highlight words in searched topics:

Choose **Options > Search Highlight On** on the Help Viewer toolbar.

To turn highlighting off:

Choose **Options > Search Highlight Off** on the Help Viewer toolbar.

Copyright © Right Hemisphere 2007. All Rights Reserved.

Keyboard Shortcuts: Help Viewer

The following keyboard shortcuts can be used for navigation in the Help Viewer.

Action	Keyboard Shortcut
Close the Help Viewer	ALT+F4
Switch between the Help Viewer and other open windows	ALT+TAB
Display the Options menu	ALT+O
Hide or show the Navigation pane	ALT+O and then press T
Print a topic	ALT+O and then press P Right-click in the Topic pane and click Print
Move back to the previous topic	ALT+LEFT ARROW ALT+O, and then press B
Move forward to the next topic if you have just viewed it	ALT+RIGHT ARROW ALT+O, and then press F
Turn on or off search highlighting	ALT+O and then press O
Return to the home page	ALT+O and then press H
Switch between the Navigation and Topic panes	F6
Scroll through a topic	UP ARROW and DOWN ARROW PAGE UP and PAGE DOWN
Scroll through all the links in a topic	TAB

Contents Tab

The following keyboard shortcuts can be used for navigation in the Contents tab of the Help Viewer.

Action	Keyboard Shortcut
Display the Contents tab Note: Use this shortcut to see where a topic fits in the table of contents.	ALT+C
Open and close a book/folder	PLUS SIGN and MINUS SIGN LEFT ARROW and RIGHT ARROW
Choose a topic	DOWN ARROW and UP ARROW
Display the selected topic	ENTER

Index Tab

The following keyboard shortcuts can be used for navigation in the Index tab of the Help Viewer.

Action	Keyboard Shortcut
Display the Index tab	ALT+N
Type a keyword for which to search	ALT+W and then type the word
Choose a keyword in the list	UP ARROW and DOWN ARROW
Display the associated topic	ALT+D

Copyright © Right Hemisphere 2007. All Rights Reserved.

Search Tab

The following keyboard shortcuts can be used for navigation in the Search tab of the Help Viewer.

Action	Keyboard Shortcut
Display the Search tab	ALT+S
Type a keyword for which to search	ALT+W and then type the word
Start a search	ALT+L
Choose a topic in the results list	ALT+T and then UP ARROW and DOWN ARROW
Display the selected topic	ALT+D
Search for a keyword in the result list of a prior search	ALT+U and press ENTER
Search for words similar to the keyword. For example, to find words like 'running' and 'runs' for the keyword 'run'.	ALT+M and press ENTER
Search through topic titles only	ALT+R and press ENTER

Copyright © Right Hemisphere 2007. All Rights Reserved.

Support

Online

Our online support page contains technical support information relating to all of the Right Hemisphere products. It provides access to the latest patch releases, tutorials, links to the registration pages, and the Right Hemisphere Forum including newsletters, FAQs, and tips and tricks.

Please take the time to check the support page (http://www.righthemisphere.com/support/contact_support.php) if you have any queries **before** sending us an email, in particular, you should check the Knowledgebase http://www.righthemisphere.com/support/kb/. It is most likely that the answer is right there!

Registration and Activation

If you require assistance with registration or activation, please contact us using our support form (http://www.righthemisphere.com/support/contact_support.php).

Help

The application User Reference is accessed from the product menu and, depending on the product you are using, by pressing **F1**. It contains detailed information about all the product features and capabilities and includes guides to the program controls.

Silver Support

Right Hemisphere Client Customers who purchase the Silver Support Plan will get high priority and fast resolution to the technical queries. In addition to the complimentary technical support, we provide the following supplementary technical support:

- Direct response to technical queries within one business day
- Support Availability Monday through Friday 11AM - 6 PM EST
- Direct contact with our customer support personnel via e-mail AND telephone
- Software Upgrades - 50% off Retail
- BETA Program Participation.

To learn more about the Silver Support Plan, please see the Silver Support http://www.righthemisphere.com/support/support_overview.html page on our website.

Copyright © Right Hemisphere 2007. All Rights Reserved.

License Activation

After product registration, you must activate the product license.

Procedure

To activate the application or a module:

1. Click the Windows **Start** button, choose **All Programs > Right Hemisphere > Deep Exploration** then click **Deep Exploration**.
2. Do one of the following:
   - If you are activating Deep Exploration, choose **Help > Activate Deep Exploration** on the menu bar.
   - If you are activating a module, choose **Help > Activate Modules** on the menu bar.
3. Enter your Serial Number/Order ID and Authorization Code in the appropriate fields.
4. Do one of the following:
   - Click **Current user only** to make the application available only to the user activating the product.
   - Click **All users** to make the application available to all users on this computer.

   Note: Administration rights are required to activate the application using this option.
5. Click **Activate** and restart Deep Exploration.

Activation is now complete.

Copyright © Right Hemisphere 2007. All Rights Reserved.

Updating

Menu bar > Help > Internet Update

Deep Exploration can be updated in a number of different ways:

- Scheduled automatic updates via Deep Exploration's Help menu. This method uses Right Hemisphere's Cortex utility (http://www.righthemisphere.com/support/help/cortex/cortex_readme.htm), which is installed by default when Deep Exploration is installed.
- User-triggered automatic updates from within the Cortex utility.
- Manual download and copy of files via the Patches section (http://www.righthemisphere.com/support/register/all_reg2.php?ara=1) of the Right Hemisphere Web site. This method should be used if you do not have an Internet connection.

Below, we describe the process of updating files from within Deep Exploration. Please see your Cortex Help documentation for further information.

Cortex Updates

By default, Cortex automatically checks for new plugins every two weeks. However, you can specify the frequency by which the plugins are updated using the Update dialog (on page 298). For example, you can set Cortex to update Deep Exploration every month or every week.

You are advised if there are new files, and from there you can either immediately update Deep Exploration or ignore the updates until you are ready. You can also manually check for updates at any time.

Note: You must have an Internet connection to be advised of the latest updates. If you do not have a connection, you can subscribe for the latest technical bulletin (http://www.righthemisphere.com/support/newsletter/index.php) to be advised of the updates.

During the update process, Cortex compares the current files (located in Deep Exploration's installation folder), with the latest file versions (located on the Right Hemisphere Web site). Note that if a new version of Cortex is available, it must be updated before plugins or modules are updated.

Scheduled updates are performed after Deep Exploration is started and the specified time interval has elapsed. They can be disabled from within Cortex or when Cortex is checking for updates.

If a new version of Cortex is available, it must be updated before plugins or modules are updated.

When updating, any new files that are found are downloaded in a compressed format. They are then decompressed and copied to Deep Exploration's folder. You can change the location where Cortex looks for updates from with the Cortex utility. For example, a local update server.

Certain folder 'write' permissions are required to update plugins. When Deep Exploration is installed, a user group is created for it that has 'write' permissions to the Deep Exploration's plugin folder and to Cortex's root folder. If you want to update Deep Exploration, you must belong to that application user group.

Note: Certain user groups already have the required permission to update Deep Exploration. For example, Administrators and Power Users.

Registry Settings

All settings are preserved when you update the application. For example, background color, grid settings, and import options. Additionally, your favorites (on page 302), file history (on page 304), themes (on page 321), thumbnails, and any files located within the 3D Model folder are preserved.

Note: The uninstall process (on page 448) also preserves your settings.

Copyright © Right Hemisphere 2007. All Rights Reserved.

File Updates and Frequency

Procedures

To trigger a file update:

1. Choose **Help > Internet Update** on the menu bar.
2. Click **Update Now**.
3. Do one of the following:
   - Click **Yes** to continue the update process.
   - Click **OK** if there are no files to update.
   - Click **Settings** to modify the time of the next update.

Note: The dialog displays the size of the update that will be downloaded. You can exit the update process by clicking No.

To modify the update frequency:

1. Choose **Help > Internet Update** on the menu bar.
2. Select the 'Automatically update' check box.
3. Select the update frequency in the Update field.
4. Click **OK**.

Copyright © Right Hemisphere 2007. All Rights Reserved.

Deep Exploration Overview

Deep Exploration is a desktop application used to manage 2D, 3D, animation, video and audio assets. A number of different tools allow you to explore, view, transform, optimize, animate, and publish in a number of formats. While searching for files, you can carry out other activities and, you are alerted when files are found for file preview and file download selection. You can also keep track of your viewed images and select the most recent, and you can create and present slide shows, either in windows or as full-screen presentations.

Deep Exploration is sold in two forms: the CAD Edition and the Standard Edition (on page 13). The CAD Edition supports opening and importing all supported CAD file formats (on page 560).

The application encompasses industry leading, consistent file conversion and an SDK is available to create custom graphics, management and manipulation tools.

Deep Exploration uses metadata to display a variety of graphics information. For example, you can view the number of vertices, sub-objects and the texture bitmaps in a drawing. You can pan, rotate and zoom to explore 3D models, add comments, cameras and lights, and you can view object details, sub-objects and textures.

Some of the numerous features include:

- Rapid import process.
- 3D objects and materials browse capability.
- 3D model and texture Web search.
- File history browse facility.
- Effortless organization of 3D models.
- Display and hide separate objects.
- Multiple viewports.
- Gradient and image background, and shadow display.
- Object position controls.
- Slide show creation.
- Thumbnail generation.
- Built-in export features.
- Batch processing.
- Creation of user-defined views based on the current scene view.
- Easy management of plugins, registration, and licensing.
- Full-screen display mode with auto-hide toolbars.
- Export to the Universal 3D format (.u3d) and then insert the .u3d files into Adobe PDF documents.
- Layers are utilized to group scene objects into a single hierarchy level.
- Background images can be added to scenes.
- Distance measurements between elements or within a single element.
- Creation of preset 3D objects (primitives) including spheres, stairs, gears, and archways.
- Ability to alter 3D objects while keeping file sizes to a minimum.
- Object instancing.
- Advanced material display.

Copyright © Right Hemisphere 2007. All Rights Reserved.

What's New in Deep Exploration

The following new features in Deep Exploration will improve the way you use the application and also the quality of work it helps you create:

- Detail views for detail and locator view graphics
- Cross section cutting plane
- Quarter and half - Box section cutting
- Improved callout layout and presentation
- 2D and 3D Symbol workflows
- Improved partslist functionality, including Drag'n'Drop renumbering, support for external BOMs, and multicolumn metadata support
- New geometry functions, including copy/paste and mirror workflows
- New version of cortex for automatic updating
- Automated parts and assemblies workflow
- New drawing tools added and workflows enhanced
- DX8, DX9 illustration line style display support (OpenGL too)
- Paper sizes allow for aspect ratios and dpis to be transparently supported for multiple views
- WebCGM export including automatic hotspot creation
- 2D line styles in 3D viewer
- 2D vector illustration output enhancements to minimize extra lines and make lines more efficient and easier to edit
- Reordering of layers
- Improved markups and notes functionality more types, easier workflows
- Support for 3dConnexion spacemouse
- Improved realight light maps
- Enhanced auto UV mapping of all models
- Updated JT file import options
- Improved JTPMI functionality
- Google SketchUp import and export
- FiLMBOX import and export
- Support for Catia 4 and 5 PMI data
- OpenFLT support with improved LOD support and dynamic display
- Collada import and export
- Silo3D import and export
- 3D XAML export support
- DWF import and export
- Binary SAT (SAB) support
- Easy Thrustline creation including animation
- Improved color palette/selector
- New 2D alpha channel tools
- Camera trajectory interactive visual editing
- Keyframing extensions to include colours and other data types
- Thumbnails in Microsoft Windows Explorer
- Universal metadata support and browser

Copyright © Right Hemisphere 2007. All Rights Reserved.

- Improved measurement functionality including angles and display focusing on relevant measurements
- Ability to calculate surface area and volume of a model
- Improved Illustration module functionality
- New PDF publish module using Acrobat interface with much improved control and capability
- Randomize objects (to prevent users making accurate measurements)

Copyright © Right Hemisphere 2007. All Rights Reserved.

Product Tutorials

Product tutorials are continually created and updated, they are available at the Right Hemisphere Web site (http://www.righthemisphere.com/support/tutorials/de/de_tutorials.html).

Some of the tutorials currently available include:

Materials, Animation, Vector Illustration - Edit materials, highlight the objects, correct animation, create a BOM, create a vector illustration.

Materials, Disassembly Animation, Steps - Fix common errors, apply materials, reduce file size, create disassembly animation steps, create a PDF document.

Markups and Measurements - Adding markups and measurements to models, updating and renaming model views.

Inserting and Viewing 3D Content in Adobe Acrobat - Create a .u3d file, insert and view 3D content in a PDF document using Adobe Acrobat Professional 7.0.

Creating Customized views in an .xml - Creating custom views in an .xml file.

Creating Vectorized Callouts - Creating vectorized callouts in a 3D model and publishing to an Adobe PDF file.

Copyright © Right Hemisphere 2007. All Rights Reserved.

Getting Started with Deep Exploration

This section is designed to help you get started with Deep Exploration.

Procedure

To start Deep Exploration, do one of the following:

- Click the Windows **Start** button, choose **All Programs > Right Hemisphere > Deep Exploration** and then click **Deep Exploration**.
- Double-click the Deep Exploration .exe file in Windows Explorer or, if so configured, on your desktop.

You can now begin using Deep Exploration (on page 37).

Copyright © Right Hemisphere 2007. All Rights Reserved.

Using Deep Exploration

Once you have started Deep Exploration, you can search for, open and view, modify, convert, and manage your 2D and 3D files.

This section presents these topics, designed to help you use and understand Deep Exploration. It also introduces you to the Deep Exploration terminology and some essential features.

The User Interface (on page 246) section presents the program controls and shows you where to find them.

Copyright © Right Hemisphere 2007. All Rights Reserved.

Creating New Scenes

Menu bar > File > New
Standard toolbar > New Empty Scene

You can create a new empty scene in the .rh format, then add complex models to that scene, edit it, and then save it to another file format.

Procedure

To create a new empty scene, do one of the following:

- Choose **File > New** on the menu bar.
- Click **New Empty Scene**  on the Standard toolbar.
- Click a file in the File list (on page 384).
- Press CTRL+SHIFT+N on your keyboard.

Copyright © Right Hemisphere 2007. All Rights Reserved.

Opening Files

Menu bar > File > Open
Standard toolbar > Open a File

You can use a number of methods to open (load) and view supported files.

If you select a specific type of file to open (file 'format') and the file contains import properties (on page 40), the Settings button is enabled allowing you to modify the import properties and then open the file with your settings applied. Note that if you modify the import properties for a particular format, those settings are applied to any file of the same format when it is opened or reloaded (on page 39).

When opening files, if the currently opened file has not been modified, you can open another file by a single-click. If the current file has been modified, for example, if materials, shaders, textures, or animation has been added, you must double-click another file to open it.

Note: When you open an archive file (on page 673), the contents are automatically displayed in the File list.

If the selected file takes a long time to open, you can cancel the opening operation.

Please see the appendices for more information on the supported file formats.

Procedures

To open a file, do one of the following:

- Choose **File > Open** on the menu bar, search for and select the file you want to open, and click **Open**.
- Click **Open a File**  on the Standard toolbar, search for and select the file you want to open, and click **Open**.
- Click a file in the File list (on page 384).
- Press CTRL+O on your keyboard, search for and select the file you want to open, and click **Open**.

  Note: If the file does not load, the selected format may not match the file's true format or the file may be damaged.

To cancel the file opening operation:

Click the **Stop** button  on the Standard toolbar.

Copyright © Right Hemisphere 2007. All Rights Reserved.

Importing Files

Menu bar > File > Open > Settings
Standard toolbar > Open > Settings
Keyboard > CTRL+O > Settings
Right-click file in History or File list > Import Options

If a file contains import properties, you can modify those properties via the Import Options dialog, for your settings to be applied to the file. Once you have modified the import properties for a particular file format, those settings are applied to any file of the same format when it is opened (on page 39) or reloaded (on page 54).

If, when importing files, there is more than one plugin with which you can import a file, you can choose the plugin with which you want to import the file.

Please see the appendices for information on all supported file formats.

Note: When importing a scene that contains bones, a new layer (on page 169) is created and all the bones are assigned to that layer.

Import Options

The tabs and the options displayed when importing a file differ depending on the selected file format and on the form of Deep Exploration you have installed; the CAD Edition, or the Standard Edition with the various modules (on page 13):

- The CAD Edition delivers the Method A import options.
- The Standard Edition and the various modules (on page 13) delivers both the Legacy and Method A import options.

Many tabs and options are identical across different file formats. The common settings are described in the General tab topic (on page 41). Any unique settings are described in the individual file format topics located within the appendices.

Note that support for the CAD format versions (on page 560) also differs depending on the version of Deep Exploration you have installed.

Note: You can also access the Import Options dialog for each file format via the Plugin Manager (on page 180). The settings are applied when you next open a file of that particular format.

Procedure

To modify file import properties:

1. Do one of the following:
   - Choose **File > Open** on the menu bar, select the type of file you want to open, select the file, and then click **Settings**.
   - Click the **Open** button  on the Standard toolbar, select the type of file you want to open, select the file, and then click **Settings**.

     Note: You must select the file type for the Settings button to become active.
   - Press CTRL+O on your keyboard, search for and select the file you want to open, and click **Settings**.
   - Right-click a file in the History or File list and click **Import Options**.
   - Right-click a file in the History or File list, choose **Import Options**, and then click the plugin with which you want to import the file.

Copyright © Right Hemisphere 2007. All Rights Reserved.

Note: If the file does not load, the selected format may not match the file's true format or the file may be damaged.

2. Make the selections you require.
3. Do one of the following:
   - If you are opening a file via the Open command, button, or keyboard shortcut, click **OK** and then click **Open**.
   - If you are opening a file via the File or History list, click **OK**.
4. Reload the file.

General Tab

Menu bar > File > Open > Settings > General tab
Standard toolbar > Open > Settings > General tab
Keyboard > CTRL+O > Settings > General tab
Right-click file in History or File list > Import Options > General tab

The General tab is used to define the import properties for the selected file format.

The tabs and the options displayed when importing a file differ depending on the selected file format. However, many tabs and options are identical across different file formats. These settings are described in the individual file format topics located within the appendices.

Please see the appendices for information on all supported file formats.

Geometry Transform

Import Options dialog > General tab > Geometry Transform

The Geometry Transform settings are used to transform (rotate, position, and scale) the scene along the X, Y, and Z axes. For example, the following examples show a scene rotated to 0, 0, 0 degrees, and to 90, 0, 180 degrees.

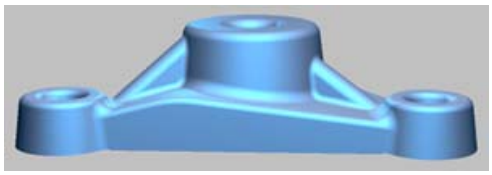

Rotation values 0,0,0

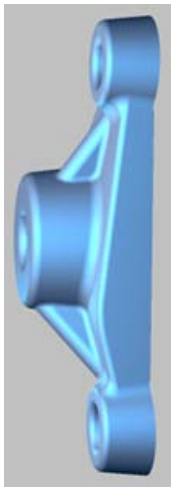

Rotation values 90,0,180

Copyright © Right Hemisphere 2007. All Rights Reserved.

Tessellation Settings

Tessellation can be used to modify the arrangement and density of models' polygons. In doing so, a finer mesh is created for models as the curvature gets tighter.

There are a number of tessellation parameters that define the model tessellation including grid aspect ratio, surface deviation, and tolerance.

Surface Deviation

Surface deviation is the maximum distance that is allowed between a surface described by the BREPs (boundary representations), and the polygons that are produced by the tessellation process to approximate that surface. That is, between an edge and its tessellation. A smaller surface deviation causes more polygons to be produced creating smoother models. The units are expressed as unit size based on those used by the model.

In the images below, the first has a surface deviation of 0.5, and the second has a deviation of 0.05. The first image displays a roughly approximated surface curve. The second image contains many more faces than the first and therefore displays a smoother approximation of the curve circumference.

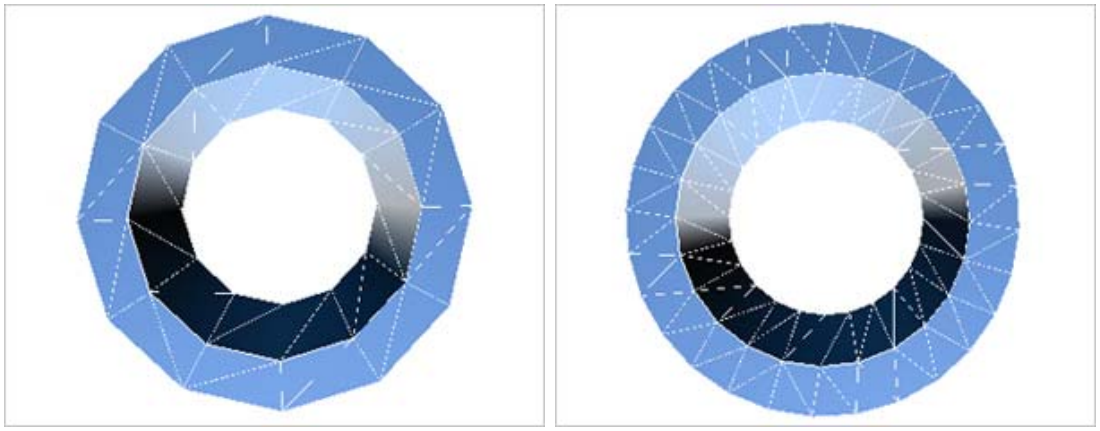

Surface deviation 0.5 / Surface deviation 0.05

Copyright © Right Hemisphere 2007. All Rights Reserved.

Normal Deviation

Normal deviation is the maximum angular deviation allowed between a face and its triangulation. Pairs of triangles cannot incorporate a dihedral angle greater than this amount. This units are expressed in degrees.

This setting determines the minimum number of faces that may represent the circumference of a true cylinder, regardless of the surface deviation (on page 42) setting. Medium and small objects relative to the total scene bounding box may well easily fall within surface tolerance tessellation tolerances with perhaps only four or five sides representing a true cylindrical surface. Therefore, by using this tolerance setting you are controlling the 'coarseness' of tessellation regardless of the geometry's relative size in the scene. For example, an angle of 30 results in a 12-sided tessellated cylinder, and an angle of 45 results in an 8-sided tessellated cylinder. When importing files using Method A, the minimum normal deviation for holes or small cylinders is 45 meaning the minimum number of sides for these will be eight.

In the images below, the first has a normal deviation of 30; the second has a deviation of 5 and contains has many more polygons than the first.

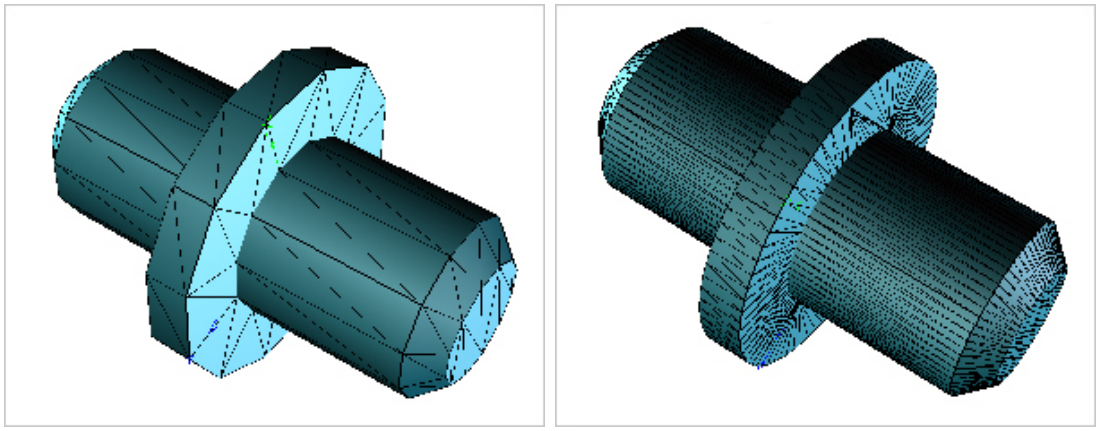

Normal deviation 30 degrees / Normal deviation 5 degrees

Note: Normal deviation is also known as 'angle tolerance'.

Copyright © Right Hemisphere 2007. All Rights Reserved.

Default Tessellation

The following examples show the different 'look' of the same file using each of the four default tessellation settings when the file is imported.

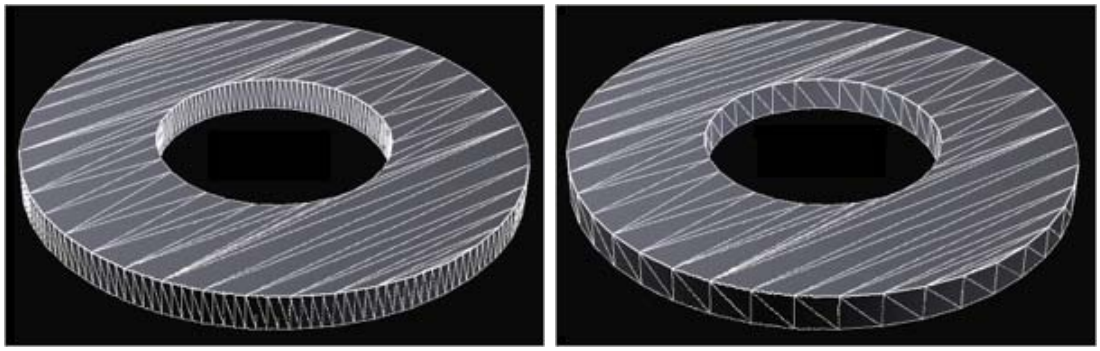

Very High (vertices 576, faces 726) / High (vertices 144, faces 294)

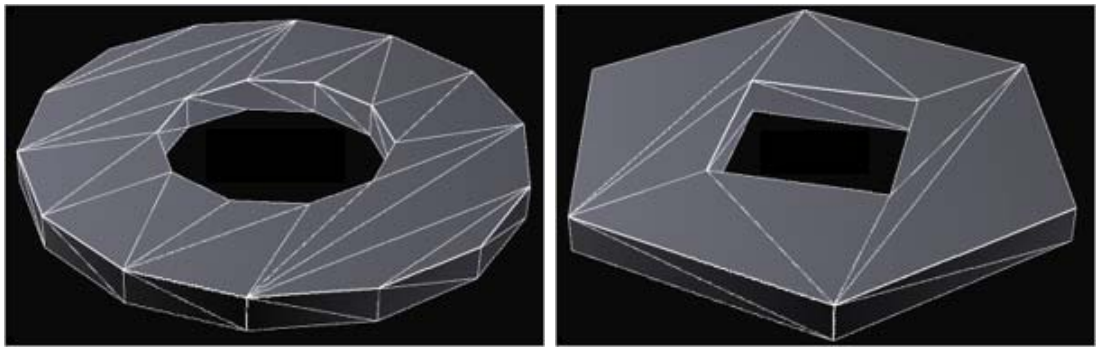

Medium (vertices 48, faces 102) / Low (vertices 20, faces 62)

Copyright © Right Hemisphere 2007. All Rights Reserved.

Grid Aspect Ratio

Grid aspect ratio determines the ratio (between 0 and 1) of the width to height for each 'surface square'. That is, each group of polygons that makes up a square on an object's surface. The units are expressed as a fraction. Grid aspect ratio helps to avoids the creation of very long, narrow triangles which can cause undesirable lighting and shading artifacts.

For example, a value of 1 causes the tessellation process to attempt to produce squares instead of rectangles. A value of 0.5 causes the process to attempt to produce rectangles instead of squares. These rectangles would have a 2:1 ratio.

As this is the ratio of longest side to shortest side, the value for the grid aspect ratio option can never be greater than 1; a value of 0 effectively disables the option as there are no constraints on the shape of the quad patches, a value of 1 creates square patches, and a value of 0.5 creates patches that are half as wide as they are long.

Whatever the setting, the quad patches are further subdivided into two triangles each.

In the images below, the first has a grid aspect ratio of 0; the second has a ratio of 1 and comprises more polygons which are nearly square.

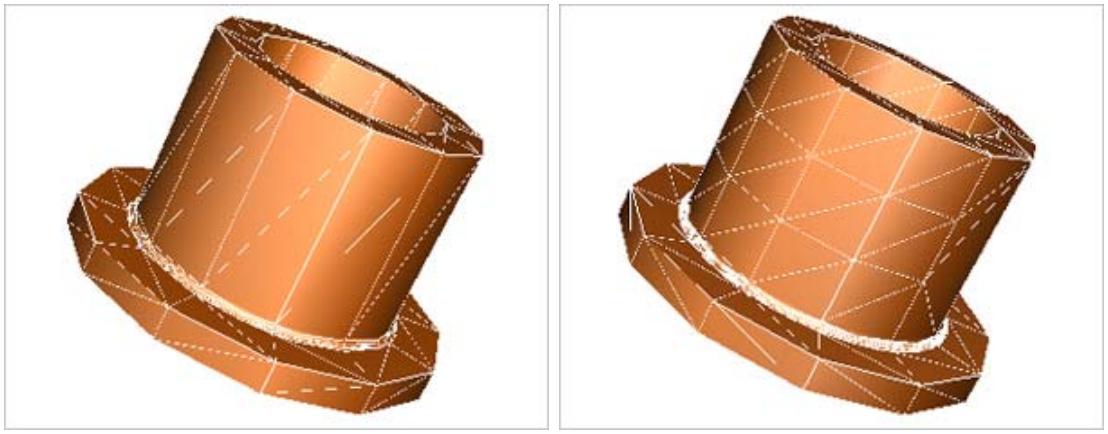

Grid aspect ratio 0 / Grid aspect ratio 1

Copyright © Right Hemisphere 2007. All Rights Reserved.

Maximum Edge Length

Maximum edge length restricts the maximum edge length in the tessellated model to a certain length. The units are expressed as a percentage of the size of the object's bounding box diagonal; each edge must be smaller than the result of multiplying the diagonal length of the objects' bounding box and the percentage entered. The smaller the maximum edge length that you enter, the finer the tessellation.

For example, if you enter a value of 10%, the edge length of each polygon is divided until it is no longer than the length of the object's bounding box diagonal x 0.1.

In the images below, the first has a maximum edge length of 100%; the second has a length of 10% and contains has many more faces than the first.

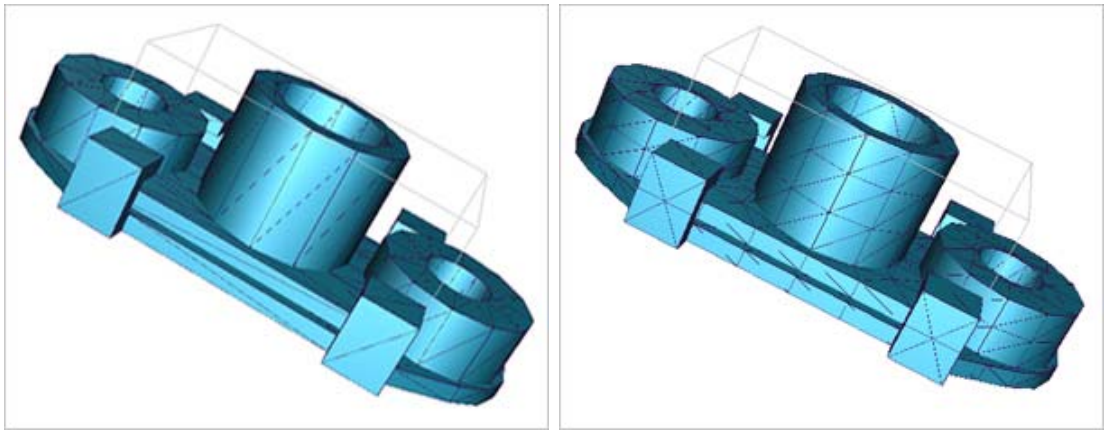

Maximum edge length 100% / Maximum edge length 10%

Copyright © Right Hemisphere 2007. All Rights Reserved.

Tolerance Settings

Angle Tolerance

Angle tolerance is the maximum angular deviation allowed between a face and its triangulation. Pairs of triangles do not incorporate a dihedral angle greater than this amount. This parameter gives a user added control over faces with very small radii. Lower values result in finer tessellations, while higher values give coarser tessellations.

Note: Angle tolerance is also known as 'normal deviation'.

Planar Tolerance

Planar tolerance is the maximum distance allowed between a face and its triangulation. Triangle interiors do not deviate from the face interior by more than this amount. The units are expressed in unit size based on those used by the model.

Tessellation Tolerance

Tessellation tolerance is the maximum distance allowed between an edge/curve and its tessellation, or the maximum distance between the edge and the side of the facets along the edge when tessellating faces. Triangle edges do not deviate from edges of the face by more than this amount, or by more than the maximum distance between the edge and the side of the facets along the edge when used in face triangulation.

This setting is similar to surface deviation (on page 42). However, it also measures the angular tolerance when approximating curves. The units are expressed as unit size based on those used by the model.

Copyright © Right Hemisphere 2007. All Rights Reserved.

Searching for Files

Menu bar > View > Explorer Bar > Search
Standard toolbar > Search
Click current panel or list menu bar arrow > Search

Using the Search panel, you can search for files locally or through the World Wide Web (Web), and you can continue using Deep Exploration when a search is being performed.

When files are found, a Search tab (on page 388) appears in the File list (on page 384) displaying all the files matching the search criteria. From here you can refine your search further (on page 51), preview the found files, and load the file you require.

You can also perform searches using the Gateway Module (on page 205).

Procedures

To begin searching for files:

1. Do one of the following to display the Search panel (on page 305):
   - Choose View > Explorer Bar > Search on the menu bar.
   - Click the **Search** button  on the Standard toolbar.
   - Click the arrow on the menu bar of the currently displayed panel or list, and then click Search  on the Standard toolbar.
2. Do one of the following:
   - Click **Local file search** to search through your computer's hard drive and any network drives to which you are connected.
   - Click **Web search** to search the Web.
3. Continue at Local File Search (on page 48) or Web Search (on page 49).

To perform a new search:

1. Click **New Search**  on the Search panel toolbar.
2. Enter the new details for the search and click **Search**.

To close a Search tab:

Click **Close**  on the tab that you want to close.

To sort files and folders:

Click a column name for the column on which you want to sort. Depending on the order in which they were originally, the files and folders are sorted in ascending or descending order. A small triangle on the column name indicates the order type.

Copyright © Right Hemisphere 2007. All Rights Reserved.

Local File Search

Menu bar > View > Explorer Bar > Search > Local file search

When you search locally for files using the Local Search panel (on page 306), Deep Exploration searches though sub-folders of the selected drive by default. You can choose to search through the drive only and exclude searching thorough sub-folders, and you can also search for specific file types (formats).

Procedure

To search for a local file:

1. Enter a file name if you want to search for a file with that name.
2. Select the Type check box and select a format if you want to search for a specific type of file.
3. Select the drive through which you want to search in the 'Look in' field.
4. Clear the 'Search sub-folders' check box if you want to search through the selected drive only.
5. Click **Search**.

Any files that match the search criteria are displayed in a Search tab (on page 388).

Note: You can stop searching at any point by clicking the Stop Search button.

Web Search

Menu bar > View > Explorer Bar > Search > Web search

Using the Web Search panel (on page 306), you can search for model and texture files through the Web. You can customize the search parameters such as adding and removing 2D and 3D file extensions, selecting a destination folder in which to download files, and setting the number of concurrent searches to perform.

The number of concurrent searches, that is search 'threads' determines how many search engines are searched at the same time. These search engines are specified in the configuration file when Deep Exploration is installed. For example, if there are 20 search engines specified in the configuration file and you enter 5 search threads, Deep Exploration searches through the first four search engines, then the next four and so on, five times until all 20 search engines have been searched. This functionality is used to increase the speed of Web searches and is dependent on your Internet Service Provider (ISP) and bandwidth etc.

After searching, you can:

- Sort the results in ascending or descending order by Name, Location, Size, Engine, or Site.
- Choose to download files and folders into the destination folder.
- Get the file size information.
- Open the containing Web page of the file. We recommend looking at this to confirm any copyright issues for the file.
- Generate thumbnails. This is especially helpful if you have a number of different textures.

Copyright © Right Hemisphere 2007. All Rights Reserved.

Procedures

To search for a file through the Web:

1. Enter a file name.

   Note: This is a mandatory field and must be entered.

2. Do one of the following:
   - Click the **Models** option button to search for models files.
   - Click the **Textures** option button to search for texture files.
3. Click the **Search Settings** button. The Web Search Settings dialog appears and displays the default 2D and 3D search extensions.
4. Click **Browse**, navigate to and select the folder in which to download files.
5. Click **OK**.
6. Do one or more of the following to add or remove search extensions:
   - To add extensions, enter the extension type in the 2D or 3D files Add extension fields and click **Add**. The extension is added to the Extensions list.
   - To remove extensions, click the extension type in the 2D or 3D files Extensions lists and click **Remove**. The extension is removed from the Extensions list.

     Note: The .zip extension is automatically included in all searches by default.

   - Enter the number of concurrent searches you want the application to perform in the Number of search threads field.
7. Click **OK**.
8. Click **Search**.

Any files that match the search criteria are displayed in a Search tab (on page 388).

Note: You can stop searching at any point by clicking the Stop Search button.

To download files from the Web:

1. Do one of the following in the File list:
   - To download a single file or folder, right-click the file or folder that you want to download.
   - To download multiple files and folders, select the files that you want to download, and then right-click your selection. You can use SHIFT to select adjacent files, and CTRL to select non-adjacent files.
2. Click **Download Now**. The files are downloaded to the destination folder.

To get the file size:

Right-click the file and click **Get File Size**. The file size is displayed in the Size column.

Note: This can take some time depending on the Web site where the file resides.

To open the Web page containing a file:

Right-click the file and click **Open Info Page**. The containing Web page is opened in your Internet browser.

Copyright © Right Hemisphere 2007. All Rights Reserved.

Refining Searches

Menu bar > View > Explorer Bar > Search > Local file search
Menu bar > View > Explorer Bar > Search > Web search

You can refine searches by typing letters in the Search field in the File list 'search' tabs.

As you type letters, the files that match the specified criteria are selected immediately. As you continue changing the criteria, so too does the file selection.

For example, if you choose to select files by name with the letter 'd', all files that contain 'd' in their name are selected. For example, the files called Dragon, Bone-head, Bone-right quad and Bone-right quad01. If you then typed the letter 'r', all files that contain 'dr' in their name are selected. For example, the object called Dragon.

Refining Search Rules

The basic rules for refining searches are:

- You may use for any combination of letters (a through z) and numbers (0 through 9).
- The text entered must be in the correct order. For example, if you want to select objects with the name 'dragon' in them, you can enter 'dr' but not 'rd'.

Procedure

To refine a search:

Type characters in the Search field of the Search tab (on page 388) for which you want to refine the search. You search is refined immediately.

Copyright © Right Hemisphere 2007. All Rights Reserved.

Managing Files, Themes and Thumbnails

You can use manage files using the Favorites (on page 302) and History (on page 304) lists, themes (on page 321) and thumbnails. These management tools are stored as files in your registry settings (on page 30) in various locations on your computer.

Themes can be deleted within the Display Settings panel and favorites from within the Favorites panel toolbar. However, you can delete your history and thumbnails by deleting the related management tool file.

Location of Management Tool Files

Tool	File	Application Version	Location
Favorites	favorites.dat	5.0	C:\Documents and Settings\[user name]\Application Data\Right Hemisphere\Deep Exploration5\
History	history.dat	5.0	C:\Documents and Settings\[user name]\Application Data\Right Hemisphere\Deep Exploration5\
Themes		5.0	C:\Program Files\Right Hemisphere\Deep Exploration5\Themes
Thumbnails	pictures.dat	5.0	C:\Documents and Settings\All Users\Application Data\Right Hemisphere\Deep Exploration5

Note: All settings are preserved when Deep Exploration is updated (on page 30) or uninstalled (on page 448).

Copyright © Right Hemisphere 2007. All Rights Reserved.

Merging Files

Menu bar > File > Merge File
Drag file from File list
Right-click and drag file from File list

The user can show several visualizations at the same time by merging the same file or different files into the current scene.

Procedures

To merge a file using merge options:

1. Open the file (on page 39) into which you want to merge another file.
2. Do one of the following:
   - Choose **File > Merge File** from the menu bar, navigate to and select the file you want to merge, and click **Merge Options**.
   - Right-click the file that you want to merge in the File list and drag it into the current scene.
3. Select the merge options (on page 90) you require.
4. Click **Open**.

To merge file without using merge options:

1. Open the file into which you want to merge another file.
2. Do one of the following:
   - Modify the import options (on page 40) of the same file without reloading the file.
   - Modify the import options of a different file if required.
3. Drag the file you want to merge from the File list into the current scene within the viewport.

The viewport displays the two files. If you modified the import options, one file displays the original settings and the second file displays the new settings.

Copyright © Right Hemisphere 2007. All Rights Reserved.

Reloading Files

Menu bar > View > Reload file
Keyboard > CTRL+F5

Files can be reloaded to display the most recent view of scenes. For example, if the import settings have been modified for a particular file format.

Note: Once you have selected import properties for a particular file format, those settings are applied to any file of the same format when it is opened or reloaded.

Procedure

To reload a file, do one of the following:

- Choose **View > Reload File** on the menu bar.
- Press CTRL+F5 on your keyboard.

Copyright © Right Hemisphere 2007. All Rights Reserved.

Saving Files

Menu bar > File > Save
Menu bar > File > Save As > Settings
Standard toolbar > Save As > Settings

You can save (export/convert) 2D and 3D files to a number of supported file formats. Various settings can be established when saving files depending on the type of file in which you select to save (the output format).

When you begin saving a file, a 'save' dialog (on page 250) appears and if the file contains export properties, you can modify those properties and apply them to the file. For example, if you save a file to the .jpeg format, you can determine the quality of the saved file. If you save a file to the .rh format, you can save keyframe animation, normals, skins, and smoothing. Once you have modified the export properties for a particular file format, those settings are applied to any file of the same format when it is saved.

The 'save' dialog tabs and options differ depending on the selected output format. However, many tabs and options are identical across different file formats. The shared settings are described in the individual tab topics (Animation (on page 56), Geometry Transform (on page 56), Materials (on page 58), and Texture Maps (on page 59)). Any unique settings are described in the file format topics located within the appendices.

Note: Certain settings can be saved within .rh version 4.0 files (on page 523) including viewport layouts (on page 63) and layers (on page 169).

You can also publish files (on page 183) to HTML using various templates and then view them in detail in your browser.

Note that while the 'save' dialog is used to save to most file formats, the Vector Illustration tool (on page 163) can be used to save files to a number of additional formats including .ai, .cgm, .eps, and .swf. Certain formats can be saved using both methods, such as .dxf.

Note: You can also access the Export Options dialog for each file format via the Plugin Manager (on page 180). The settings are applied when you next save a file to that particular format.

Please see the appendices for information on all supported file formats.

Procedures

To save a file in the same format:

1. Open and modify the file as you require.
2. Choose **File > Save** on the menu bar.

   Note: The **Save** command saves the last **Saved As** file.

To Reload a file:

1. Press **CTRL** + **F5** to reload the last opened file.

To save a file to a different format:

1. Open and modify the file as you require.
2. Do one of the following:
   - Choose **File > Save As** on the menu bar.
   - Click **Save As** on the Standard toolbar.
3. Browse for the directory where you want to save the file.

Copyright © Right Hemisphere 2007. All Rights Reserved.

4. Enter a name for the file.
5. Select the format in which you want to save the file.
6. Select the types of objects that you want to save.
7. Do one of the following:
   - Click **Settings**, modify the properties as required, click **OK**, and then click **Save**.
   - Click **Save**.

General Tab

Menu bar > File menu > Save As > General tab
Standard toolbar > Save As > General tab

The General tab is used to define the export properties for the selected file format.

The tabs and the options displayed when exporting a file differ depending on the selected file format. However, many tabs and options are identical across different file formats. The common settings are described here. Any unique settings are described in the individual file format topics located within the appendices.

Please see the appendices for information on all supported file formats.

Animation Tab

Export Options dialog > General tab > Animation tab

The Animation tab is used to define the animation export properties for the selected file format.

Please see the appendices for information on all supported file formats.

Interface

Export animation—Saves the animation to file.

Rescale animation—Used to establish the length of the animation.

- **Set animation length to**—The length of the animation in seconds.
- **Change animation to**—Scales the animation length relatively by the specified percentage.

Reverse animation sequence—Reverses the animation sequence from moving forward to backward.

Remove redundant keys—Removes duplicate animation keys from the exported file. The exported animation plays with the same or similar behavior, but with much fewer keys.

Copyright © Right Hemisphere 2007. All Rights Reserved.

Geometry Transform Tab

Export Options dialog > General tab > Geometry Transform tab

The Geometry Transform tab defines the scene transformation matrix that is used to rotate the current scene. It is used to rotate the scene in the X,Y and Z axes. For example, the following examples show a scene rotated to 0, 0, 0 degrees, and to 90, 0, 180 degrees.

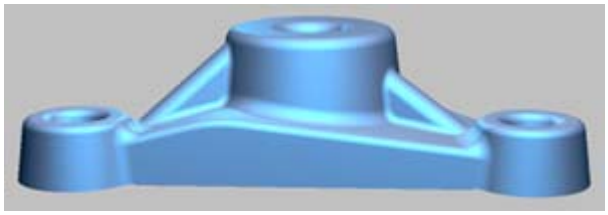

Rotation values 0,0,0

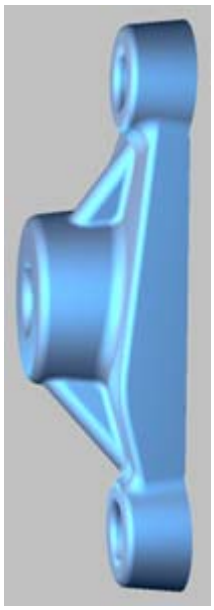

Rotation values 90,0,180

Please see the appendices for information on all supported file formats.

Interface

Enable pre-save transformation—Saves transformed scenes. Otherwise, the scene is saved without transformation.

Scaling—Used to establish the method and amount by which to scale the scene along the X, Y, and Z axes.

- **Actual scene size**—Saves the scene at it's original size.
- **X**—Scales the scene along the X axis.
- **Y**—Scales the scene along the Y axis.
- **Z**—Scales the scene along the Z axis.
- **Fit to**—Fits the scene to the specified scene unit along each axis.
- **Percent**—The percentage by which to scale the scene along each axis.

Copyright © Right Hemisphere 2007. All Rights Reserved.

- **Scale factor**—Multiplies the scene's scale by the specified coefficient along each axis. All three scale factors must be non-zero.
- **Divide by**—Divide by coefficient. That is, the scene's scale is divided by the specified coefficient along each axis. All three scale factors must be non-zero.
- **Keep proportions**—Scales the scene along each axis proportionally.

Rotation—Used to establish the scene's degree of rotation around the X, Y and Z axes. If all the values are set to 0, there is no rotation.

- **X**—Rotates the scene along the X axis.
- **Y**—Rotates the scene along the Y axis.
- **Z**—Rotates the scene along the Z axis.

Position—Used to establish the position of the scene along the X, Y and Z axes. If all the values are set to 0, there is no movement.

- **X**—Positions the scene along the X axis.
- **Y**—Positions the scene along the Y axis.
- **Z**—Positions the scene along the Z axis.

Center object—Centralizes the object. Otherwise, the scene is centralized. The object or scene is shifted so that the center of the bounding box coincides with the origin of the world axis.

Materials Tab

Export Options dialog > General tab > Materials tab

The Materials tab is used to define the export properties for the selected file format's materials.

Please see the appendices for information on all supported file formats.

Interface

Change all materials before export—Activates the file's material property fields and applies the settings when the file is saved.

- **Substitute color of textured material to**—If a diffuse texture is present, the diffuse color is set to the selected color.
- **Set ambient color to**—Applies the selected color as the ambient color. Ambient light is the general light that illuminates the entire scene. It has uniform intensity and is uniformly diffuse. It has no discernible source and no discernible direction.
  - **Or scale by**—Multiplies the ambient color by the specified value.
- **Set diffuse color to**—Applies the selected color as the diffuse color. Diffuse color describes how a material reflects diffuse light in a scene. Because most scenes contain much more diffuse light than ambient light, diffuse reflection plays the largest part in determining overall color. Additionally, because diffuse light is directional, the angle of incidence for diffuse light affects the overall intensity of the reflection. Diffuse reflection is greatest when the light strikes a vertex parallel to that vertex normal. As the angle of reflection increases, the effect of diffuse reflection diminishes. The amount of light reflected is the cosine of the angle between the incoming light and the vertex normal.
  - **Or scale by**—Multiplies the diffuse color by the specified value.
- **Set specular color to**—Applies the selected color as the specular color. Specular reflection creates highlights on objects, making them appear shiny. You establish the color of the specular highlights by setting this color.
  - **Or scale by**—Multiplies the specular color by the specified value.

Copyright © Right Hemisphere 2007. All Rights Reserved.

- **Set emissive color to**—Applies the selected color as the emissive color. This parameter models "glowing" objects. This can be useful for displaying pre-lit models (where the light energy of the room is computed explicitly), or for displaying scientific data.
  - **Or scale by**—Multiplies the emissive color by the specified value.
- **Set opacity of all transparent objects to**—If the material opacity is less than 1, the opacity value is replaced by the specified value.
- **Set glossiness to**—Changes the material's glossiness to the specified value.

Texture Maps Tab

Export Options dialog > General tab > Texture Maps tab

The Texture Maps tab is used to define the export properties for the selected file format's textures.

Please see the appendices for information on all supported file formats.

Interface

Save textures—Saves textures either as separate files or within the 3D file depending on your selection in the 'Include textures to 3D file' field.

Include textures in 3D file—Saves textures within the 3D file. This option is only available for certain formats. For example, the .rh format.

Note: When saving to the .rh format, this option used in conjunction with the 'Convert textures to' option only converts new textures; any existing textures are not modified. This means internal PNG ambient occlusion maps and internal JPG textures can be present in the same .rh file.

Convert textures to—Used to select the format in which to export the textures. For best results when saving .rh files that include Realight maps, you should choose the Portable Network Graphics format (.png). This helps to avoid JPG artifacts in shadow maps.

Note: When saving to the .rh format, this option used in conjunction with the 'Include textures in 3D file' option only converts new textures; any existing textures are not modified. This means internal PNG ambient occlusion maps and internal JPG textures can be present in the same .rh file.

- **Settings**—Opens the Export Properties dialog for the selected format and is used to establish settings for the texture files.

Overwrite existing—Used to select the action if the texture map being exported already exists in the destination folder.

- **Replace—**Overwrites the existing map.
- **Skip—**Retains the existing map.
- **Rename—**Opens a dialog if the map already exists, to enable you to rename the map.

Scale textures—Resizes large textures so that the longest edge of each texture file is the specified length.

- **Maximum edge length**—The length of each texture file's longest edge.

Store links to all existing images of following types—Links each texture image to the 3D file for all the formats that are selected in the list box. Textures for any unselected formats are converted to the type defined in the 'Convert textures to' field. This option is only available if you choose to save textures as separate files.

- **Store links to all existing images**—Links each texture image that already exists as a separate file to the 3D file. Only embedded textures are exported to new 2D files.

Copyright © Right Hemisphere 2007. All Rights Reserved.

- **Relative path**—Saves each link as a relative path. Relative paths change depending upon the location of the image.
- **Full path**—Saves each link as a full path to the location of the image. For example, F:\My Images\Category\animage.bmp.
- **Local short name**—Saves each link with the name of the file. For example, animage.bmp.

Include existing images of types—Saves each texture image in the 3D file for all the formats that are selected in the list box. Textures for any unselected formats are converted to the type defined in the 'Convert textures to' field. This option is available only if you select the 'Include textures in 3D file' check box.

- **Include all existing images**—Saves each texture image that already exists as a separate file in the 3D file in its original format. Textures without a pre-defined format (for example, ones that are created by the Realight tool) are converted to the type defined in the 'Convert textures to' field.

Convert texture file extensions to—Converts the extensions of all texture files to the specified extension. This option is only available if you choose to save textures as separate files.

Copy textures to folder—Copies the textures to the specified folder. This option is only available if you choose to save textures as separate files.

- **Browse**—Used to browse for and select the folder in which to save the textures.

Prefix—The prefix to append to the new texture file names. This is helpful in identifying any new maps that are created. This option is only available if you choose to save textures as separate files.

Copyright © Right Hemisphere 2007. All Rights Reserved.

Viewing Scenes

Scenes can be viewed in many different ways using various tools. In this section we discuss viewing the same scene in multiple viewports, using preset or user-defined views, displaying true perspective, orthographic and isometric views, applying various render and lighting modes, displaying the viewport across your monitor, and using the viewport grid.

You can also:

- Rotating, scaling, and panning (on page 64) scene contents.
- Defining the scene element colors (on page 81). For example, the background, bounding boxes, lines and vertices, grid cells, default materials, and individual axes.
- Setting the render method for selected objects (on page 282).
- Applying viewport degradation (on page 282).
- Focusing the camera (on page 393) on all visible and hidden objects.

See also Options Dialog (on page 280) and Viewport Right-Click Menus (on page 391).

Using the Color Selector

Custom colors can be applied by using the **Color Selector**. The Color Selector is a palette of color that allows you to select an exact shade when applying color. Custom color can be set in many areas of Deep Exploration. For example, you can use the Color Selector to:

- Color objects.
- Apply colors for the display of scene elements.
- Color materials.
- Modify colors of scene elements.
- Color markups and callouts.

Procedures

To use the Color Selector:

1. Where a color change is required, click the color selection option to open the color selector.
2. Modify properties as required.

To modify the background of the Color Selector:

1. Click the top left corner of the title bar.
2. Click one of the following:
   - **Set Windows default color**—Displays the Windows default color background.
   - **Set grey color**—Displays a grey background.
   - **Set color from dialog**—Displays the selected palette color as the background color.

To display tooltips on the Color Selector:

1. Click the top left corner of the title bar.
2. Click **Show Tooltip Help**.

Copyright © Right Hemisphere 2007. All Rights Reserved.

Color Dialog

You can view and modify color properties using the Color dialog.

Interface

Current—Displays the currently selected color.

Original—Displays the original color.

Hex—Displays the hex coordinates of the currently selected color.

RGB—Displays the RGB coordinates of the currently selected color.

>—Expands the dialog to show the color palette.

<—Hides the color palette.

HSV controls—Determines the level of the hue, saturation and value components for HSV color. Move the slider to control the level of color for each component.

RGB controls—Determines the level of the red, green and blue color channels for RGB color. Move the slider to control the level of color for each component.

Alpha control—Determines the level of the transparency component known as the alpha channel.

 **Store color into first empty slot**—Inserts the selected colour into the first empty slot in the color palette.

 **Scroll to empty slot**—Goes to the empty slots in the color palette.

 **Pick color from screen**—Allows color selection from the desktop by drag and drop.

 **Undo Palette**—Undoes the latest change that you have made to the color palette.

 **Redo Palette**—Redoes the latest change that you have made to the color palette.

 **Reset palette**—Resets the color palette.

- **Simple palette**—Displays the simple color palette.
- **Named colors by hue**—Arranges the colors by hue.
- **Named colors by lightness**—Arranges the colors by lightness.
- **My palettes**—Select a customized palette.
- **Palette before edit**—Resets the palette.

 **Load palette from file**—Opens a new color palette from file.

 **Save palette to file**—Saves a color palette to file.

Close—Closes the dialog and applies the settings. Any changes made to the settings are saved.

Help—Opens the relevant Help topic.

Copyright © Right Hemisphere 2007. All Rights Reserved.

Using Viewports

Menu bar > View > Viewports

Deep Exploration's workspace (on page 299) comprises one or more viewports that are used to view and modify files; one viewport for 2D files and up to four viewports for 3D files, from where different views of the same scene are can be displayed. For example, one viewport might display an orthographic view of the model from the top and another might display an isometric view in perspective.

Multiple viewports can be helpful when aligning scene components as you can gain an immediate understanding of the entire model from all views. They are also useful when working with animation; they help to speed up the time taken to create animations and new assemblies.

A viewport label is displayed in the upper, left corner of each 3D viewport showing the current view for each viewport, whether transparency and textures (maps) are being displayed, and the angle of object rotation while they are rotated. Note that you can override many settings for the individual viewports using the Display menu (on page 257).

Various right-click menus (on page 390) are available depending on the current file type and where the cursor is positioned. For example, if the current file is a 3D scene and you right-click over the viewport label, you can select a render method in which to view the scene. If you right-click with one or more objects selected in that scene, you can zoom into the viewport to focus on the selected objects.

Functionality

Viewports function in the following manner:

- When you first open Deep Exploration, a single viewport is displayed.
- 2D images are always displayed in a default layout.
- There can be up to four viewports for 3D files; each can be used modify the current file.
- Viewports can be displayed in a variety of layouts. For example, two viewports can be stacked one on top of the other, four viewports side by side.
- Once a viewport layout is selected, it is used when opening subsequent files.
- If you close and reopen Deep Exploration, the last layout used is retained.
- Only one viewport can be active (selected) at a time.
- Certain viewport functions are scene independent. That is, they can be performed on individual viewports:
  - You can display a different view (on page 75) in each viewport.
  - You can display a different render mode (on page 70) in each viewport.
  - You can display different elements (on page 81) in each viewport. For example, the scene bounding box, cameras and lights, back-facing geometry, bones, and markups.
- When rendering to the viewport (on page 265) with multiple viewports displayed, only the active viewport displays the rendered scene. If you resize the viewports, the render changes back to the 3D scene.
- F12 switches between the single viewport layout and the most recently selected multiple viewport layout.

Copyright © Right Hemisphere 2007. All Rights Reserved.

Procedures

To select a viewport layout:

Choose **Views > Viewports** from the menu bar and then click the layout you want.

To switch between single and multiple viewport layouts:

Press F12.

To select all objects in a model:

Press Ctrl+A.

To invert selection:

Partially select objects in the model, Press Ctrl+I, the selection changes to the non-selected objects. Pressing Ctrl+I again toggles between selected objects. If all objects are selected, Ctrl+A, pressing Ctrl+I deselects all.

Navigating the Viewports

Menu bar > View > Controls and Toolbars > Navigation
Right-click menu bar > Navigation
Customize Layout dialog > Toolbars tab > Select Navigation > OK

The 2D and 3D viewports can be navigated in a number of different ways including:

- Rotating models.
- Rolling the camera.
- Scaling models up and down.
- Panning images and scenes.
- Viewing scenes from different angles.
- Zooming in on, and out from the scene.
- Displaying the scene as it best fits within the viewport.
- Displaying 2D images in their standard view - their actual size.
- Displaying 3D scenes in their standard camera view (on page 75).

Keyboard shortcuts are available for many of the 2D (on page 434) and 3D (on page 434) navigation tools.

Note: Objects and pivot points can also be transformed (on page 93).

Pan Tool

Navigation toolbar > Pan tool > Drag image or model in viewport
Keyboard > P+drag model in viewport
Keyboard > LEFT ARROW
Keyboard > RIGHT ARROW
Left+right-click / middle-click > Drag in viewport

The Pan tool  is used to pan images and scenes in the 3D viewport. That is, the camera is rotated camera around a vertical axis. You can also use the arrow keys to view scenes from different angles. That is, move the camera laterally or vertically.

Note that regardless of the selected navigation mode, pressing P and dragging in the viewport pans the scene; pressing the LEFT and RIGHT ARROWS pans the scene; left+right-clicking or middle-clicking and dragging in the viewport views the scene from a different angle; right-clicking and dragging in the viewport scales the scene; pressing the UP and DOWN ARROWS trucks the scene.

Copyright © Right Hemisphere 2007. All Rights Reserved.

Procedures

To pan an image or scene:

1. Select the 2D or 3D viewport.
2. Do one of the following:
   - Click **Pan**  on the Navigation toolbar and drag the image or scene around the viewport.
   - Press P on the keyboard and drag the image or scene around the viewport.
   - Hold down the LEFT or RIGHT ARROW.

The camera is rotated around the vertical axis.

To views a scene from a different angle:

1. Select the 3D viewport.
2. Left+right-click or middle-click and drag the image or scene around the viewport.

The camera is moved laterally or vertically.

Rotate Tool

Navigation toolbar > Rotate > Drag model in viewport
Navigation toolbar > Rotate > SHIFT+drag model in viewport
Keyboard > R+drag model in viewport

The Rotate tool  is used to rotate models and roll the camera in the 3D viewport. When you rotate a model, the camera moves around a point of rotation (focal point) to orbit the scene. The focal point is the center of the scene by default; however, you can change the focal point by panning, scaling, and zooming the scene. When you roll the camera, it is moved around the viewing axis.

A label is displayed in the upper, left corner of each 3D viewport showing the angle of object rotation as they are being rotated.

Note that regardless of the selected navigation mode, pressing R and dragging in the viewport rotates the model; left+right-clicking or middle-clicking and then dragging in the viewport views the scene from a different angle; pressing the LEFT and RIGHT ARROWS pans the scene; right-clicking and dragging in the viewport scales the scene; pressing the UP and DOWN ARROWS trucks the scene.

Procedures

To rotate a model:

1. Select the 3D viewport.
2. Do one of the following:
   - Click **Rotate**  on the Navigation toolbar and drag the model around the viewport.
   - Press R on the keyboard and drag the model around the viewport.

The camera moves around the focal point and the model is rotated.

To roll the camera:

1. Select the 3D viewport.

Copyright © Right Hemisphere 2007. All Rights Reserved.

2. Click **Rotate**  on the Navigation toolbar.
3. Press SHIFT and drag the model around the viewport.

The camera is moved around the viewing axis.

Scale Tool

Navigation toolbar > Scale tool > Drag model in viewport
Navigation toolbar > Scale tool > Rotate IntelliMouse wheel
Right-click > Drag in viewport
Keyboard > UP/DOWN ARROWS

The Scale tool  is used to scale models up or down in the 3D viewport, similar to using the zoom tools. That is, you can magnify and reduce the magnification of scenes.

You can also use the arrow keys to 'truck' the scene. That is, move the camera into scene to view more closely, or out from scene to view more distantly. When trucking, the focal point is always a fixed distance from the camera.

Note that regardless of the selected navigation mode, right-clicking and dragging in the viewport scales the scene; pressing the UP and DOWN ARROWS trucks the scene; left+right-clicking or middle-clicking and dragging in the viewport views the scene from a different angle; pressing the LEFT and RIGHT ARROWS pans the scene.

Procedures

To scale a scene up:

1. Select the 3D viewport.
2. Click **Scale**  in the Navigation toolbar.
3. Do one of the following:
   - Hold down the mouse button and drag the mouse into the viewport centre.
   - Rotate the IntelliMouse wheel away from you.
   - Right-click, hold down the mouse button and drag the mouse into the viewport centre.

The image is magnified.

To scale a scene down:

1. Select the 3D viewport.
2. Click **Scale**  in the Navigation toolbar.
3. Do one of the following:
   - Hold down the mouse button and drag the mouse out from the viewport centre.
   - Rotate the IntelliMouse wheel toward you.
   - Right-click, hold down the mouse button and drag the mouse out from the viewport centre.

The image magnification is reduced.

Copyright © Right Hemisphere 2007. All Rights Reserved.

To truck into a scene:

Hold down the UP ARROW. The camera moves into the scene.

To truck out from a scene:

Hold down the DOWN ARROW. The camera moves out from the scene.

Zoom Tools

Navigation toolbar > Zoom In
Navigation toolbar > Zoom Out
Navigation toolbar > Zoom Window
Navigation toolbar > Best Fit
Navigation toolbar > Standard View
Keyboard > +
Keyboard > -
Keyboard > *

The zoom tools are used to magnify or reduce the magnification of images and scenes, display them as they best fit within the viewport, and display them in their standard view.

Note that for 2D images, this standard view is the image's actual size. For 3D scenes, it refers to the scene's standard camera view (on page 75).

When you zoom in on a scene, the camera angle (FOV) is narrowed to magnify scene. When you zoom out from a scene, the camera angle is widened to reduce the magnification.

Note that regardless of the selected navigation mode, right-clicking and dragging in the viewport scales the scene; pressing the UP and DOWN ARROWS trucks the scene; pressing P and dragging in the viewport pans the scene; left+right-clicking or middle-clicking and dragging in the viewport views the scene from a different angle; pressing the LEFT and RIGHT ARROWS pans the scene.

Note: The viewport right-click menus (on page 390) can also be used to perform certain zoom functions.

Procedures

To zoom in on an image:

1. Select the 2D viewport.
2. Do one of the following:
   - Click **Zoom In**  in the Navigation toolbar, hold down the mouse button and drag the mouse into the viewport centre.
   - Press PLUS SIGN (+).

The image is magnified.

To zoom in on a scene:

1. Select the 3D viewport.
2. Do one of the following:
   - Click **Zoom Window**  in the Navigation toolbar and drag in the viewport. The selection is magnified to the selection's extents.

Copyright © Right Hemisphere 2007. All Rights Reserved.

- Click **Zoom In** in the Navigation toolbar, hold down the mouse button and drag the mouse into the viewport centre.
- Press the PLUS SIGN (+).

The scene is magnified.

To zoom out from images and scenes:

1. Select the 2D or 3D viewport.
2. Do one of the following:

- Click **Zoom Out**  in the Navigation toolbar, hold down the mouse button and drag the mouse out from the viewport centre.
- Press the MINUS SIGN (-).

The image or scene magnification is reduced.

To zoom images and scenes to the best fit:

1. Select the 2D or 3D viewport.
2. Do one of the following:

- Click **Best Fit**  in the Navigation toolbar.
- Press CTRL and the PLUS SIGN (+).

The entire image or scene is displayed within the viewport.

To zoom images and scenes to their standard view:

1. Select the 2D or 3D viewport.
2. Do one of the following:

- Click **Standard View** 

in the Navigation toolbar.
- Press the MULTIPLICATION SIGN (*).

The image or scene is displayed in it's standard view in all viewports.

Copyright © Right Hemisphere 2007. All Rights Reserved.

Viewport Layouts

Menu bar > View menu > Viewports > Click layout

Multiple viewports enable you to see models in various layouts. The layout can be changed to arrange the viewports in various ways including resizing the viewport windows (on page 422). When you click a viewport, it becomes active immediately and the viewport frame is highlighted in yellow. Inactive viewport frames are gray.

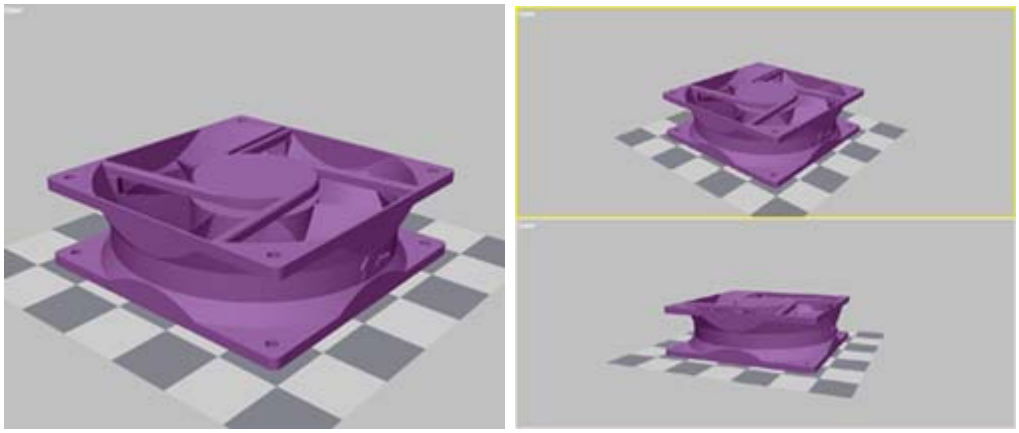

Single view / 2 views stacked

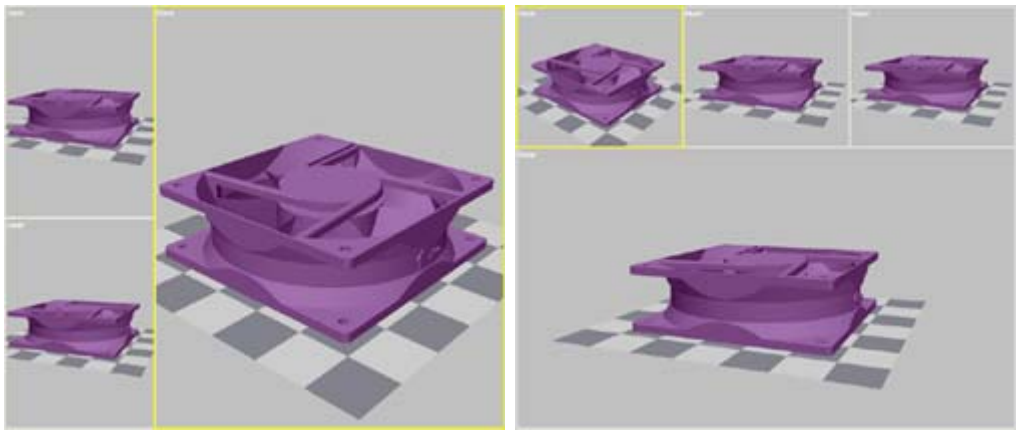

3 views left split / 4 views top split

The active viewport remains so when you change the layout. It is also always either the largest viewport displayed or is displayed at the top, left of the workspace depending on the layout you select.

The viewport layout can be saved within .rh version 4.0 files (on page 523) via the Object Properties dialog (on page 335). When the file is opened again, that layout is displayed automatically regardless of your current layout selection.

Copyright © Right Hemisphere 2007. All Rights Reserved.

Render Modes and Scene Elements

Each viewport can display a different render mode and different scene elements, as shown in the example below.

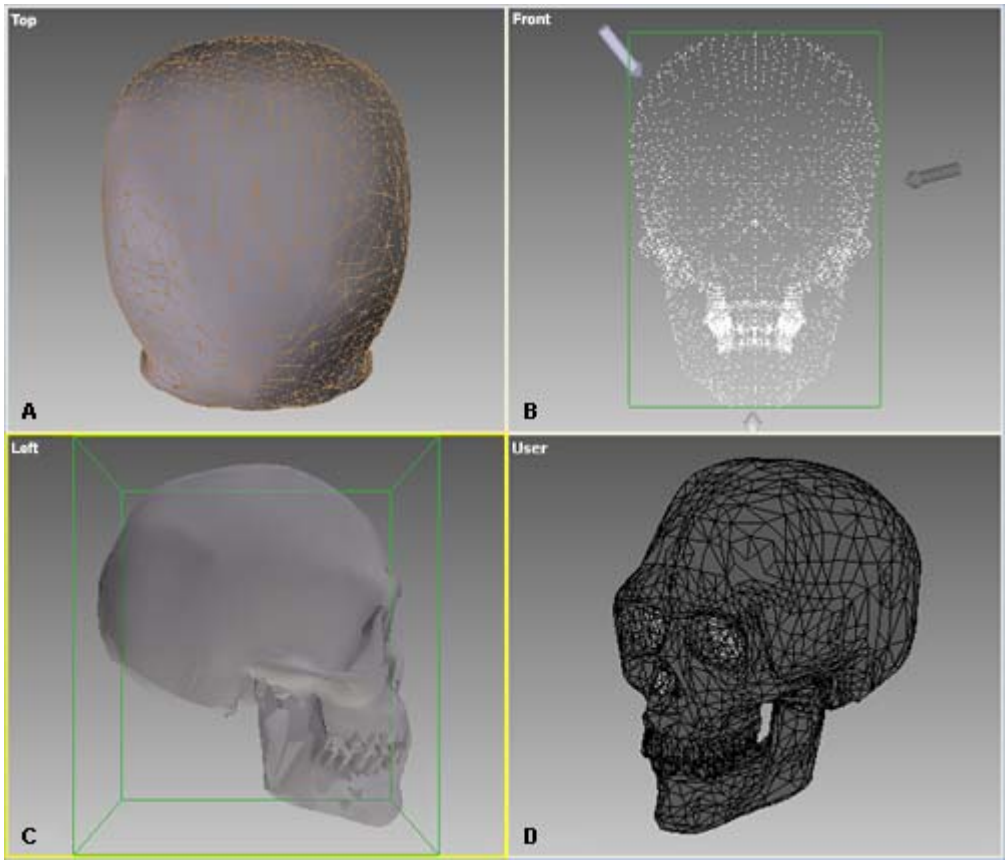

A: Top view, Solid Wireframe mode
B: Front view, Vertices mode, scene bounding box, cameras and lights elements
C: Left view, Solid mode, scene bounding box element
D: User-defined view, Line Illustration mode

The render modes and certain elements can be displayed globally for all viewports or locally in individual viewports depending on the menu from which you select the command. For example, selecting to display the scene bounding box from the Display menu display it in all viewports. Selecting to display the bounding box from a right-click viewport menu, displays it in the selected viewport.

See Render Modes (on page 70) and Scene Elements (on page 81) for further information on global and local viewport display.

Copyright © Right Hemisphere 2007. All Rights Reserved.

Render Modes

Menu bar > Display menu
Menu bar > View > Controls and Toolbars > Display
Right-click menu bar > Display
Customize Layout dialog > Toolbars tab > Select Display > OK

Various render modes can be used to apply preset scene settings that manipulate a number of display elements. Render modes can be applied globally to all viewports or locally to individual viewports depending on the menu from which you select the command as described below.

The render modes are:

- **Transparent Bounding Box—**Displays each object as a transparent bounding box.
- **Solid—**Displays each object as solid.
- **Transparent—**Displays each object as transparent.
- **Solid Wireframe—**Displays each object as solid with a wireframe.
- **Line Illustration—**Displays each object as a solid rendering with outlines overlaid on top.
- **Solid Outline—**Displays each object as solid with outlines. That is, only silhouette and crease edges are shown.
- **Shaded Illustration—**Displays each object as solid with outlines with material color overrides. That is, the objects' material colors can be replaced or blended with other colors using the Display Settings panel.
- **Bounding Box—**Displays each object as a bounding box.
- **Transparent Bounding Box Outline—**Displays each object as a transparent bounding box with outlines along the edges. Each bounding box is axis-aligned (AABB) instead of the object's actual geometry. An AABB is a box with all its edges parallel to the X,Y, and Z axes, and is the smallest box that can completely contain the given object.
- **Transparent Wireframe—**Displays each object as transparent with a wireframe.
- **Wireframe—**Displays each object as a wireframe.
- **Shaded Wireframe—**Displays each object as a shaded wireframe.
- **Hidden Wireframe—**Displays or hides the wireframe view without any visible hidden surfaces. A similar effect can be obtained using Solid Outline mode with the outline angle set to '0'.
- **Vertices—**Displays all objects as vertices.
- **Shaded Vertices—**Displays all objects as shaded vertices. The shading colors are based on the object's material colors.

Many of the render mode settings can be modified using the Display Settings panel (on page 321), and then saved as 'themes' so you can select and apply them quickly.

The render mode colors are based on the global settings established in the Options dialog (on page 286). You can override these colors using the Display Settings panel. For example, you can override the wireframe color in the Wireframe, Shaded Wireframe, and Transparent Wireframe modes.

Copyright © Right Hemisphere 2007. All Rights Reserved.

Below are some examples of the render modes. The last example shows the model rendered as a 'blueprint'; in Line Illustration mode with modified settings of a dark blue background and white lines.

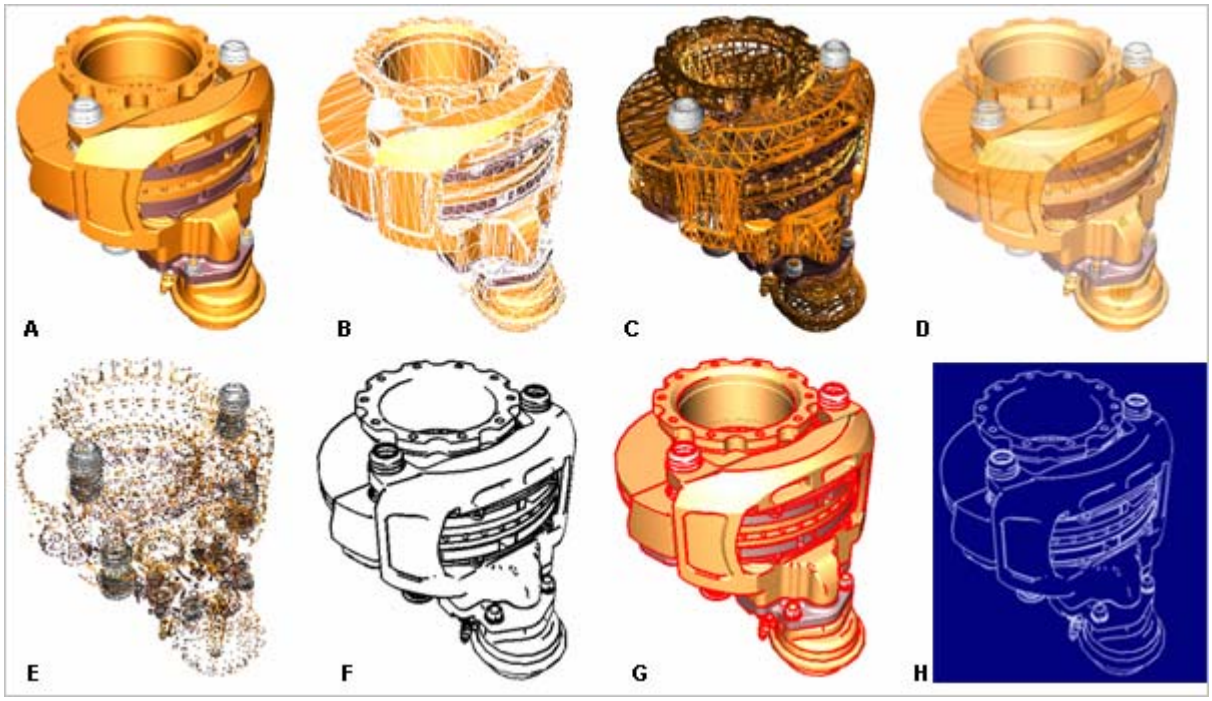

A: Solid
B: Solid Wireframe
C: Shaded Wireframe
D: Transparent
E: Shaded Vertices
F: Line Illustration
G: Shaded Illustration
H: Blueprint (Line Illustration with modified settings)

Various shortcuts (on page 435) are available from where to apply certain render modes. See also Display menu (on page 257) and Display toolbar (on page 368).

Note: The term 'wireframe' indicates that all polygon edges are shown, and the term 'outline' indicates only silhouette and crease edges are displayed. The colors of lines and vertices may be based on the object or the object's material. They can also be modified using the Options dialog or the Scene Properties dialog (on page 333).

Procedures

To apply a global render mode, do one of the following:

- Choose **Display** on the menu bar, and then click the button for the mode you want to apply.
- Click the button on the Display toolbar for the mode you want to apply.

To apply a local render mode:

1. Right-click the label for the viewport you want to modify.
2. Click the button for the mode you want to apply to the viewport.

Copyright © Right Hemisphere 2007. All Rights Reserved.

Lighting Modes

Menu bar > Display menu > Lights
Menu bar > View > Controls and Toolbars > Lights
Right-click menu bar > Lights
Customize Layout dialog > Toolbars tab > Select Lights > OK

Various lighting modes can be used to apply preset light settings for the display of the scene's lights, which imitate different kinds of real-world light sources such as the sun, office lamps, or stage and film lighting. Adding lights gives a more realistic appearance by enhancing the clarity and three-dimensionality of a scene.

A number of light settings can be applied either 'from the file', or by applying one of several lighting presets including colored lights, cube lights, and CAD optimized lights.

Note: The scene's lighting is also affected by the scene's ambient and illumination colors (on page 333).

Below are some examples of the lighting modes.

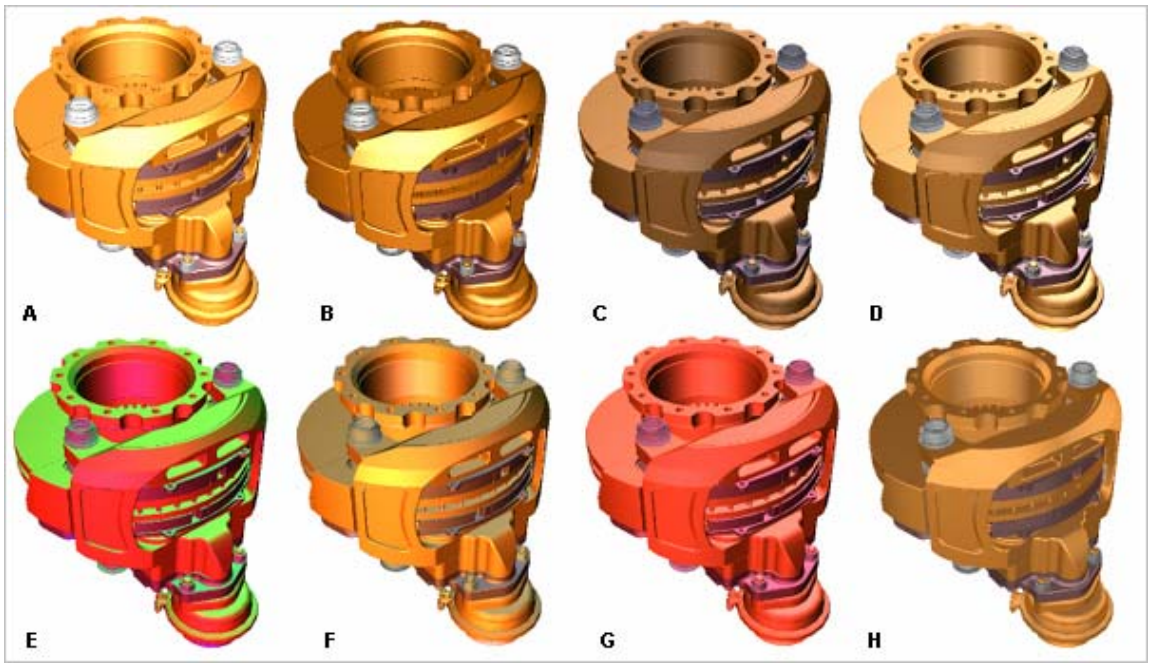

A: CAD Optimized
B: Single Light From Eye
C: White Lights
D: Daylight
E: Colored Lights Red/Green
F: Colored Lights Blue/Green
G: Marsiano Lights
H: Cube Lights

When the 'Lights from file' command is selected, any lights that are visible in the Scene tree are activated and their effects seen in the viewports. This includes any lights loaded from the file, as well as any lights that have since been added to the scene using the 'Create Editable Lights (on page 262)' function. If there are no lights in the Scene tree, then the current preset lighting mode is used. For example, Day Light or CAD Optimized Lights.

Note that as there is always one preset lighting mode selected, selecting the 'Lights from File' command does not clear that preset mode. However, selecting a new preset mode does clear the Lights from File' command, so that the effect of the mode can be seen immediately.

Various shortcuts (on page 437) are available from where to apply certain lighting modes.

See also Display menu (on page 257) and Lights toolbar (on page 372).

Copyright © Right Hemisphere 2007. All Rights Reserved.

Procedures

To apply a lighting mode, do one of the following:

- Choose **Display > Lights** on the menu bar, and then click the button for the preset mode you want to apply.
- Click the button on the Lights toolbar for the preset mode you want to apply.



To apply the 'Lights from File' mode:

1. Do one of the following:
   - Choose **Display > Lights** on the menu bar, and then click the preset mode you want to apply.
   - Click the button on the Lights toolbar for the preset mode you want to apply.
2. Do one of the following:
   - Choose **Display > Lights > Lights From File** on the menu bar.
   - Click **Lights From File** on the Lights toolbar.

To modify the scene's light intensity, do one of the following:

- Click **Increase Brightness** to increase the light intensity.
- Click **Decrease Brightness** to decrease the light intensity.
- Click **Restore Brightness** to restore the original light intensity.



Infinite and Point Lights

Point (omni) lights cast rays in all directions from a single source, and are useful for adding 'fill lighting' to scenes, or for simulating point source lights. They can cast shadows and projections.

Infinite lights attempt to recreate light that shines from a great distance away from the model. For example, light from the sun. They do not have a 'position' as such, so they can be rotated (on page 96) but not moved. Point lights can be moved (on page 96) but not rotated.

Note that when you create lights in a scene (on page 262), the type of lights that are created depend on the current lighting mode. For example, if the lighting mode is Single Light From Eye, a single point light is created. If the lighting mode is Day Light, three infinite lights are created.

Views

Views are a way of saving various display-type settings based on the current view of the scene. For example, the camera angle, render mode, and visible objects.

If you are using multiple viewports (on page 63), different views can be used in each viewport. For example, you can display the scene in perspective from the top, as 27 Isometric RBA in one viewport, with a model view applied in another viewport, and with a view from the top in yet another. The viewport label displays the current view in each viewport.

There are multiple ways of saving views; each method has its own role to play when working with 3D scenes:

Copyright © Right Hemisphere 2007. All Rights Reserved.

- Preset and user-defined camera views can be used to display scenes through various camera angles (viewpoints).
- Model views are based on the current view of the scene and emulate the properties of schematic diagrams found in various types of manuals. For example, training and reference manuals.

Different steps (on page 194) can also be displayed in individual viewports. Steps emulate sequences of arbitrary text. For example, assembly and disassembly 3D-view instructions in PDF files.

Camera Views

Right-click viewport label
Right-click viewport label > Views

Various preset and user-defined camera views can be used to display scenes including displaying scenes in perspective and through orthographic and isometric viewpoints.

User-defined views can be created either by defining the views in the views.xml file located in Deep Exploration's root installation folder, or by creating camera objects and then selecting to view the scene through the camera. You can also set any camera view for the current file format - called the 'standard view'. Then, whenever you open a file of the same format, the standard view is displayed.

Note: A sample views.xml is delivered with Deep Exploration and can be used as a template to define your custom views.

If you are using multiple viewports (on page 63), different views can be used in each viewport. For example, you can display a perspective view from the top in one viewport, a 27 Isometric RBA view in another, and a model view in yet another. The viewport label displays the current view in each viewport.

Procedures

To select a view:

1. Right-click the label for the viewport you want to modify.
2. Do one of the following:
   - Click the preset view you want.
   - Choose **Views** and click the preset or user-defined view you want.
3. Right-click the viewport label again and click **Perspective** if you want to display the scene receding into the distance.

To set the standard view for files of the current type:

1. Right-click the viewport label.
2. Choose **Views > Set Current View as Standard View for [format]**.

To remove the standard view for files of the current type:

1. Right-click the viewport label.
2. Choose **Views > Erase Standard View for [format]**.

To remove the standard view for all file types:

1. Right-click the viewport label.
2. Choose **Views > Erase Standard View for All Files**.

Copyright © Right Hemisphere 2007. All Rights Reserved.

Preset Views

Right-click viewport label > Top/Bottom/Aft/Front/Right/Left/User
Right-click viewport label > Perspective
Right-click viewport label > Views > Click view

A number of different preset camera views can be used to display scenes in the selected viewport. These views are accessed via the right-click viewport menus (on page 391). Keyboard shortcuts (on page 439) are available for many of the preset views.

- **Top / Bottom / Aft / Right / Left** (on page 391): Orthographic views that display the scene from the selected viewpoint. Orthographic views are a type of parallel projection used for drawing engineering blueprints and is used for accurate description of objects and their positioning. Most 3D design relies on 2D representations or 'orthographic' views, for example, maps, plans, cross-sections, and elevations. In familiar terms, you might think of these views as 'flat' or 'straight-on', or as 'looking at right angles'. Orthographic views are two-dimensional, each defined by two world coordinate axes. Combinations of these axes produce three pairs of orthographic views: top and bottom; front and back; left and right.
- **User**: This is the default user view and is only displayed when the camera is not at a preset view or a view defined in the views.xml. That is, as soon as you rotate the model (on page 65), this label is displayed in the viewport.
- **Perspective**: Perspective views most closely resemble human vision. Objects appear to recede into the distance, creating a sense of depth and space. For most 3D computer graphics, this is the view used in the final output that the client sees onscreen or on the page. This is used when an isometric is not suitable. Perspective projections are also used for location drawings.
- **Views** (on page 393): Displays all user-defined views and various preset views including isometric, dimetric, and trimetric.
  - **Isometric**: These views have three surfaces equally foreshortened and is the most frequently used projection. It is the simplest to understand because it is based on equals and parallels. Isometric views should be viewed without perspective.
  - **Dimetric**: A dimetric view has two of the three surfaces equally foreshortened.
  - **Trimetric**: Trimetric views have all three surfaces foreshortened by a difference ratio and can be used as an alternative when an isometric view is not suitable.
- **Model Views** (on page 77): Various user-defined model views in which to display the scene in the selected viewport.

Viewpoints

The isometric, dimetric and trimetric menus display the following commands from which to choose a viewpoint:

- **LTF—**View the model with the selected viewpoint from the left, top, front of the scene.
- **LTA—**View the model with the selected viewpoint from the left, top, aft (back) of the scene.
- **RTA—**View the model with the selected viewpoint from the right, top, aft of the scene.
- **RTF—**View the model with the selected viewpoint from the right, top, front of the scene.
- **LBF—**View the model with the selected viewpoint from the left, bottom, front of the scene.
- **LBA—**View the model with the selected viewpoint from the left, bottom, aft of the scene.
- **RBA—**View the model with the selected viewpoint from the right, bottom, aft of the scene.
- **RBF—**View the model with the selected viewpoint from the right, bottom, front of the scene.

Copyright © Right Hemisphere 2007. All Rights Reserved.

User-Defined Views

Right-click viewport label > View > Click view
3D Objects list > Right-click camera object > Activate Camera
Right-click viewport label > View > Set Current View as Default for format

User-defined views can be created either by creating camera objects or by defining the views in the 'views.xml' file. You can then activate the view in which you want to display the current scene.

You can also set and remove the current view as the default for the current file type, and you can remove the default file type views from all file types. For example, you can set .3ds files to always display an orthographic view from the bottom. You can also erase the default camera for the current file type or for all files.

- **Camera object views**: These views control the camera's position and angle. Cameras are created using the Create menu (on page 262) and can be modified as you would modify other 3D objects. They are activated via the 3D Objects list or the Views menu (on page 393).
- **Views.xml file**: Views created using the views.xml file are non-positional. That is, they only control the angle of the camera. They are activated via the Views menu (on page 393). Note that this file must be located in Deep Exploration's root installation folder for the views to be visible in the Views menu. The angle coordinates can be seen in the Information tab (on page 348) of the camera Object Properties dialog. For example, View X="88.1769", Y="11.2053", Z="-162.588".

Note: When navigating the viewport (on page 64), the default user view (on page 391) is used to view the scene. However, if you navigate the viewport with a camera object view activated and Edit Keyframes (on page 364) selected, the camera object view remains active and the camera moves about the scene.

Procedures

To create a camera object view:

1. Modify the scene view as you require.
2. Do one of the following:
   - Choose **Create > Camera** from the menu bar.
   - Choose **Create > Target Camera** from the menu bar.

To activate a camera object view, do one of the following:

- In the 3D Objects list, right-click the camera object you require, and then click **Activate Camera** .
- Right-click the viewport label, choose **Views**, and then click the camera view you want.

Copyright © Right Hemisphere 2007. All Rights Reserved.

Model Views

Menu bar > View > Controls and Toolbars > Model Views
Right-click menu bar > Model Views
Customize Layout dialog > Controls tab > Select Model Views > OK

You can create user-defined views that are based on the current view of the scene. These are called 'model views' and they emulate the properties of schematic diagrams found in various types of manuals. For example, training and reference manuals. Each model view associates the current camera position, render mode, and layer. The associated layer comprises all of the currently visible objects including callouts.

When you create a model view, the view is created immediately with all settings from the current scene (lighting, visibility, etc.) and all the default settings (layer, camera position, active display settings). The view and view's properties (on page 327) are displayed and can be modified via the Model Views panel (on page 327).

Any model views that you create can be saved within the file when saving to the .rh version 4.0 file format (on page 523).

When you select a model view:

- The active viewport is set to the associated camera render mode.
- The objects in the associated layer are made visible.
- All objects that are not associated with the view become invisible.

All viewports display the select model view's object visibility; you cannot display differing model views in separate viewports.

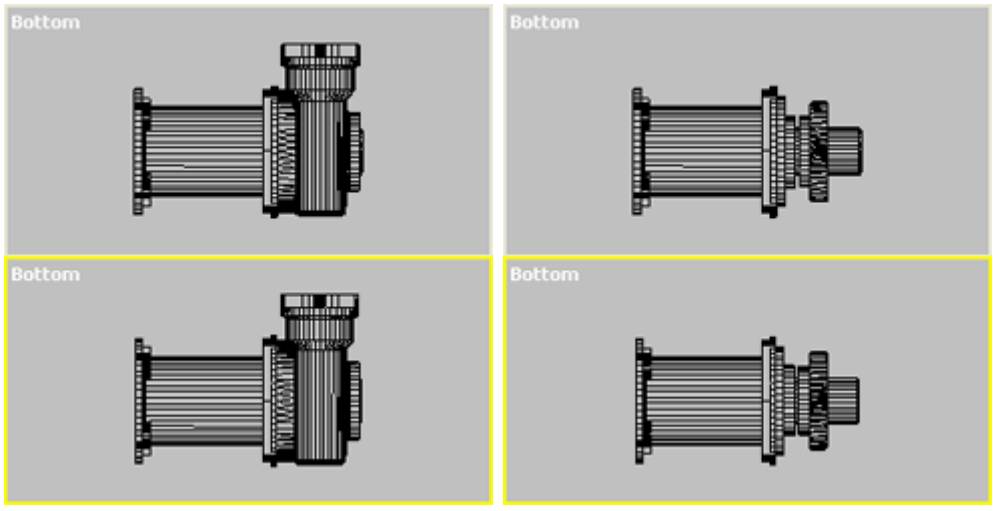

Multiple viewports: Model view with all objects displayed / Model view with some objects hidden

The Model Views panel is used to create, activate, and delete model views. You can also edit the model view names, modify their properties, and switch between a thumbnail and regular display of the views list.

If you are using multiple viewports (on page 63), different views can be used in each viewport. For example, you can display a model view in one viewport, a 27 Isometric RBA view in another, and a perspective view from the top in yet another. The viewport label displays the current view in each viewport.

Note that whenever a Teamwork markup (on page 151) is added to a scene, model views, based on the current view of the scene, are created or updated. The results depend on whether existing model views exist, or whether the scene has been transformed:

- If there are no existing model views, a new model view is created that incorporates the new markup.

Copyright © Right Hemisphere 2007. All Rights Reserved.

- If the scene has not been transformed, the existing model view incorporates the new markup. Note that you must update the model view to see the changes.
- If the scene has been transformed, a new model view is created that incorporates the new markup.

Note: Model views cannot be modified. However, you can delete them and create new model views easily.

Procedures

To create a model view:

1. Modify the scene view as you require.
2. Open the Model Views panel (on page 327).
2. Click **Create** .

To edit a model view:

1. Right-click the view you want to edit, and then click **Properties**.
2. Edit the view as required and click **OK**.

To update a model view:

Right-click the view you want to update, and then click **Update Model View**. The selected model view is updated with the current render and viewport settings.

To delete a model view, do one of the following:

- Select the view and click **Delete**  in the Model Views panel.
- Right-click the view you want to delete in the Model Views panel, and then click **Delete**.

To view a model view's properties:

1. Select the view for which you want to view the properties.
2. Right click and select **Properties** .

To activate a model view, do one of the following in the Model Views panel:

- Select the view and click **Activate**  in the Model Views panel.
- Double-click the view.
- Right-click the view and click **Activate**.
- Right-click the viewport label, choose **Views** and click the view you want.

To switch between a thumbnail and a detailed view:

Click **Thumbnails**  on the Model Views panel. If the list was displayed in a detailed view, thumbnails are displayed. If the list was displayed as thumbnails, a detailed view is displayed.

Copyright © Right Hemisphere 2007. All Rights Reserved.

Display Modes

Menu bar > View menu > Full-Screen Mode
Standard toolbar > Full-Screen Mode
Keyboard > F11

Two display modes can be used to view either the entire application or the entire viewport across your monitor.

When in Full-screen display mode, you can view the current toolbars and panels by moving your cursor to the very top, bottom, left, and right edges of the monitor.

You can also use command line arguments (on page 430) to display Deep Exploration in either Standard or Full-screen display mode whenever it is opened.

Procedures

To switch to Full-screen display mode, do one of the following:

- Choose **View > Full-Screen Mode** on the menu bar in Standard display mode.
- Click **Full-screen Mode**  on the Standard toolbar in Standard display mode.
- Press F11 on your keyboard in Standard display mode.

To switch to Standard display mode:

- Press F11 on your keyboard in Full-screen display mode.
- Press ESC on your keyboard in Full-screen display mode.

Coordinate Systems

3D Editor toolbar > Local
3D Editor toolbar > Parent
3D Editor toolbar > World
Right-click scene > World Coordinate System
Right-click scene > Screen Coordinate System

In 3D graphics, a coordinate system is a method by which points are represented in space. As their origins are in different places and their axes are aligned differently, each system has its own uses.

The 3D Editor movement, rotation, and scaling tools are based on the system selected via the 3D Editor toolbar (on page 364). The camera movement is based on the system selected via the right-click scene menu (on page 394).

Note: Clicking the buttons on the toolbar cycles through the coordinate systems.

Local Coordinate System

The local coordinate system is the coordinate system that relates specifically to the selected object. Each object has its own local center and coordinate system as defined by the location and orientation of the object's pivot point. The local center and coordinate system of an object combine to define its object space. The direction of the object's X, Y, and Z axes depend on the current transforms of the object. In contrast with the world coordinate system.

So, we can say that the position of the object is actually the position of the local origin.

Copyright © Right Hemisphere 2007. All Rights Reserved.

You can see the difference between the two coordinate systems when you unintentionally rotate an object, such as the wheel on a car, around the world axis instead of the object's local axis. The wheel immediately flies off in a large arc because the center of the rotation is at the origin of the world coordinates. To rotate the wheel correctly, the local coordinate system should be used. The wheel then rotates around its own hub, which is the origin of its local coordinates.

Note that vertices are defined in the local coordinate system. Non-uniform scale is possible in the Local system only.

Parent Coordinate System

The parent coordinate system is based on hierarchical relationships; child objects using the parent coordinate system are actually using the parent's local coordinate system.

Objects at the top level of the hierarchy are considered to be children of the scene itself, so in this case the parent coordinates equal the world coordinates.

This system is mostly relevant when using the rotation tool.

World Coordinate System

The world coordinate system forms the 'base' on which you can think of all other coordinates being defined. Usually, its origin is at the center of the scene, and its axes might be aligned with directions like north/south, east/west, and up/down. For example, it is very common for the X axis to be east, the Y axis to be north, and the Z axis to be up. This is the coordinate system in which most of the level geometry is defined.

World space is the universal coordinate system that the software uses to track objects in the scene. World space is constant and immovable. In the world coordinate system seen from the front, the X axis runs in a positive direction to the right, the Z axis runs in a positive direction upward, and the Y axis runs in a positive direction away from you.

Note that selecting the world system in the 3D Editor toolbar affects the 3D Editor tools; selecting the world system in the right-click scene menu controls the camera movement.

Screen Coordinate System

The screen coordinate system is aligned to the viewport and is the system upon which the near and far clipping planes (on page 344) are based. This command controls the camera movement along the axes when aligned with the viewport.

Scene Elements

Scenes can comprise and display numerous elements such as bones, scene and object bounding boxes, faces, shadows, surface normals, the scene grid, materials, and meshes. Many of these elements are defined as 'object elements'. For example, bones, faces, materials, meshes, vertices, edges, and faces.

Elements may be contained within the file itself, or may be added to scenes via Deep Exploration. For example, you can add a cross section plane, cameras, and lights to scenes via the application.

Certain elements can be displayed globally for all viewports or locally in individual viewports, depending on the menu from which you select the command as described below.

Copyright © Right Hemisphere 2007. All Rights Reserved.

Element Colors

You can modify the colors of scene elements. For example, you can display the bounding box in green and the X axis in red.

The elements can then be made visible via the render modes (on page 70), the Display menu (on page 257) and the Display toolbar (on page 368). Please note that you must also select the related check boxes on the 3D View tab for your color settings to be visible for the object-type elements. For example, the object bounding box, vertices, wireframe, object axes, and surface normals settings.

Changing the color of an element affects all file formats. The default element colors can be restored at any time. Note that colors can only be changed for elements that have been enabled in the original images or model.

The default material setting (on page 289) can also be modified, including the glossiness, specular, and opacity levels.

Element Properties

If an element is also defined as an object, the properties of that object can be modified (on page 335). For example, materials and the scene's cross section plane.

Procedures

To display an element globally:

Choose **Display** on the menu bar, and then click the button for the element you want to display.

To display an element locally:

1. Right-click the label for the viewport you want to modify.
2. Click the button for the element you want to display in the viewport.

To change the color of an element:

1. Do one of the following:
   - Open the Options dialog (on page 280) and, on the Colors tab, double-click the colored square for the element you want to modify.
   - Open the Scene Properties dialog (on page 333) and, on the Advanced tab, click the row down arrow for the element you want to modify.
2. Select the color you require and click **OK** twice.

To restore the default color settings:

Open the Options dialog and, on the Colors tab, click the **Reset** button.

Copyright © Right Hemisphere 2007. All Rights Reserved.

Normals

A flat polygon situated in 3D coordinate space necessarily has an orientation; it faces a unique direction. An imaginary ray pointing out from the surface of the polygon, and perpendicular to that surface, is called the 'normal' of the polygon.

As there will always be two normals, one on each side of the surface, and pointing in opposing directions, the choice of the side from which the normal projects defines the front or 'face' of the polygon. In 3D computer graphics, as opposed to the physical world, it is usual for a polygon to have only one face or side, and therefore only one normal. This is because polygons are typically used to create a closed mesh representing the surface of a 3D object and the back side of the polygon is therefore hidden inside the object.

To save render time, polygons are kept single-sided and the normal projects from only the exposed face. However, occasionally it is necessary to create double-sided polygons that have normals pointing from both sides, and which therefore can be rendered from both sides as the different sides come into view during the course of an animation. The face side of a polygon is typically established in a model file by the order in which the vertices of the polygon are listed, clockwise or counterclockwise around the facing (normal) side.

Normals can be associated not only with the flat surfaces of the polygons, but also with the individual points that make up the vertices where polygons meet on the surface of a model. This technique is used in rendering to create the appearance of curved surfaces rather that flat, faceted sides. Such 'vertex normals' can be directly assigned in the model file, but are usually computed during rendering by averaging the normals of the adjacent polygons.

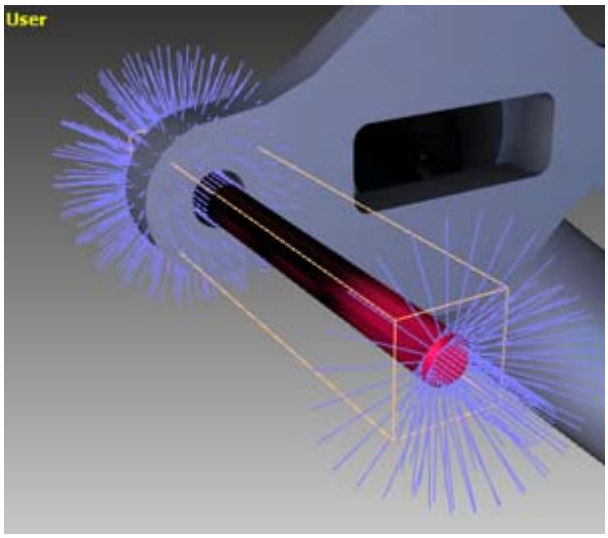

Normals pointing out from object face

Copyright © Right Hemisphere 2007. All Rights Reserved.

Viewport Background

Right-click scene menu > Open Background
Right-click scene menu > Background Image

An image can be opened into the scene background to assist with simple composition of models to create a sense of world orientation, and of the model's scale and position. The use of image backgrounds is well-suited to marketing presentations by giving products a place in the world to inspire the imagination. For example, you could match a 3D model of a car against a landscape in which the car is parked.



Model car / Landscape image / Image added as a background

The image can be scaled to fit the viewport in real-time, and you can tile and center it in the viewport.

A graduated (gradient) can also be selected for the viewport background by selecting top and bottom background colors via the Options (on page 280) or Scene Properties dialogs (on page 333).

Procedures

To open an image into a scene:

1. Right-click the scene and click **Open Background**.
2. Navigate to and select the file you want to open.
3. Click **Open**.

To modify the background image:

1. Right-click the scene and choose **Background Image**.
2. Do one of the following:

Copyright © Right Hemisphere 2007. All Rights Reserved.

- Click **Stretch** to scale the image to fit the viewport in real-time.
- Click **Tile** to tile the image in the viewport.
- Click **Center** to center the image in the viewport.

To clear the background image:

Right-click the scene and choose **Background Image** > **Clear Background**.

Viewport Grid

Menu bar > Display menu > Grid
Display toolbar > Grid

A grid can be displayed in 3D scenes (on page 260) and transparent 2D images (on page 281) to assist with the placement of objects and images and making them easier to distinguish. When displayed in scenes, grids can be thought of as the 'floor'. This can be helpful in creating a sense of model scale, model position, and world orientation. It can be useful for marketing presentations by giving products a place in the world.

You can choose the size of the units that the grid displays. For example, a 1 by 1 unit grid or a 5 by 5 unit grid. The grid cells can be either solid or transparent.

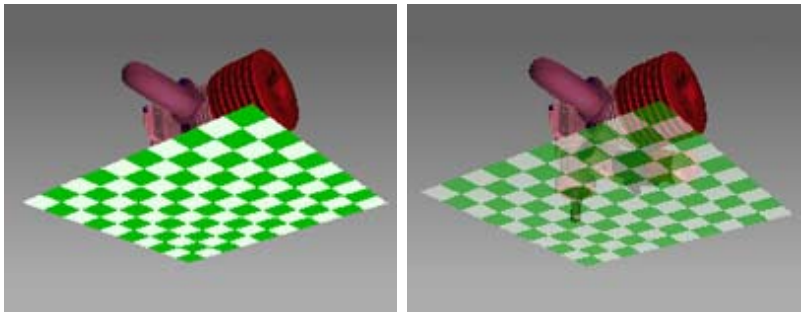

Scene: Solid grid / Transparent grid

In scenes, you can also display a shadow that is projected from the model onto the grid.

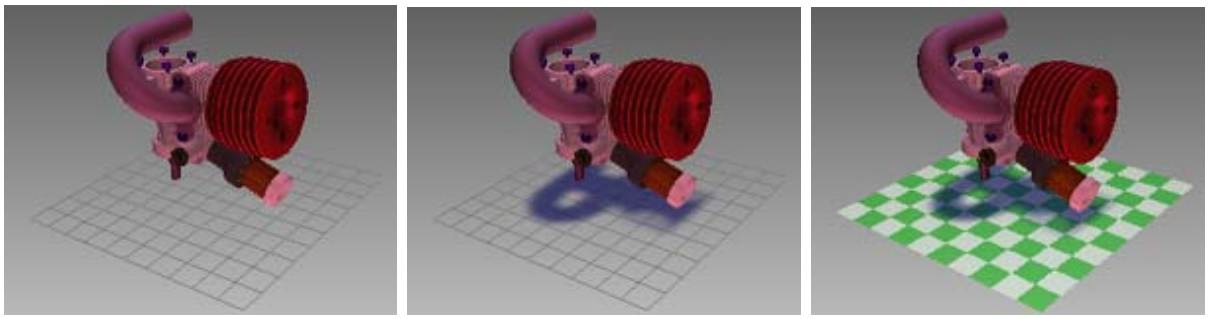

Scene: Wire grid / Wire grid with shadow / Transparent grid with shadow

The shadow's display properties (on page 334) can be modified including the shadow's resolution, edge blur, double-sided qualities, and opacity. The colors of the shadow and grid (on page 81) and also of transparent images (on page 281) can also be modified as required.

Note: The time taken to refresh the scene may increase slightly if you display a grid.

Copyright © Right Hemisphere 2007. All Rights Reserved.

Procedures

To display the grid in a scene:

1. Do one of the following:
   - Choose **Display > Grid** on the Display menu.
   - Click the Grid button down arrow on the Display toolbar.
2. Do one of the following:
   - Click **Wire Grid** to display a wireframe grid.
   - Click **Solid Grid** to display a solid grid.
   - Click **Transparent Grid** to display a transparent grid.
3. Select the size of the grid you want from the Display menu or toolbar.

To display the grid in a transparent image:

1. Choose **Tools > Options** on the menu bar.
2. Click the 2D View tab.
3. Do one or more of the following in the Transparency Settings area:
   - Select the size and color of the grid.
   - Use the color selector to select the required colors to apply to the alternating grid squares.
4. Click **OK**.

To hide the grid in a scene:

1. Do one of the following:
   - Choose **Display > Grid > No Grid** on the Display menu.
   - Click the Grid button down arrow on the Display toolbar, and then click **No Grid**.

To display and hide the scene shadow in a scene:

1. Do one of the following:
   - Choose **Display > Grid > Shadow** on the Display menu.
   - Click the Grid button down arrow on the Display toolbar, and then click **Shadow**.

If the shadow was displayed, it is now hidden. If it was hidden, it is now displayed.

Copyright © Right Hemisphere 2007. All Rights Reserved.

Objects and Materials

Models can comprise a number of scene elements (on page 81) including objects, materials, sounds etc.. The Scene Components panel (on page 329) displays all components of the current scene in a tree-view hierarchy.

There are many object types including cameras, lights, markups, primitives, and parts. Objects can be comprise multiple sub-objects and can have materials applied to them.

Materials are composed of composite layers and reflect the material properties. They are designed to principally reflect those attributes associated with maps and applied textures, rather than color or scalar variables.

Objects and materials can be controlled in numerous ways including:

- Selecting (on page 88) and searching (on page 91) for objects.
- Perform various editing (on page 93) functions.
- Modifying object visibility (on page 101).
- Grouping (on page 102) multiple objects.
- Renaming (on page 104) objects.
- Deleting (on page 104) objects.
- Highlighting (on page 282) objects.
- Making objects transparent (on page 282).
- Modifying object properties (on page 335).
- Creating primitive (on page 182) objects.
- Viewing (on page 106) materials.
- Adding materials (on page 106) to objects.
- Adding textures (on page 107) to maps.
- Modifying default material visibility (on page 106).
- Modifying texture visibility (on page 107).
- Creating, duplicating, deleting, and renaming (on page 106) materials.
- Selecting all objects (on page 106) associated with a material.
- Modifying the material properties (on page 350).

Bake Transformation

Menu bar > Tools > 3D Tools > Bake Transformation
Right-click viewport > Tools > Bake Transformation

This tool fixes vertices in place by removing any transformations that may be on an object, and fixing the vertices into that transformed position. It works both on the whole scene and on a selection.

Note: This option only fixes meshes or groups.

If a node has a descendant node of any type, other than a mesh, it does not perform a fixing of the node. If a node is selected, the plugin fixes its descendants as well, however, if a mesh is instanced it becomes unshared. The fixing operation is irreversible except for the unsharing of instanced 'points' and 'normals' in the arrays of the mesh.

Copyright © Right Hemisphere 2007. All Rights Reserved.

Object and Material Selection

Objects and materials must be selected before their properties can be modified.

This can be done in a variety of ways including manually selecting objects and materials in the Scene tree, and searching for objects by name, size, polygon count, or vertex count.

Individual, and grouped objects (both selected and unselected) can be highlighted or made transparent (on page 282). This 'isolates' the objects to make it easier to distinguish them from others.

Selecting Objects

Scene Components panel > Scene tree > 3D Objects list
Scene Components panel > Scene tree > Parts panel
Scene Components panel > Click Select Objects button
Selection tool > CTRL+drag in viewport
Click in viewport with no selection > Keyboard F3

Objects can be selected in a number of different ways. Precision selection tools are available that are helpful when selecting specific objects of complex shapes during model cleanup or animation work.

Here, we describe how to select objects manually, using the 3D Editor selection tools (on page 364) and using the Scene Components panel (on page 329). We also describe how to use the Select Objects dialog (on page 358) to search for and select objects. Note that you can also select objects using by using the right-click menus (on page 390) and various selection keyboard shortcuts (on page 438) or via selecting materials (on page 106) and layers (on page 169).

When an object is selected, a bounding box outlines the object in the viewport, and the object name is highlighted in the 3D Objects list (and Parts list) as shown below.

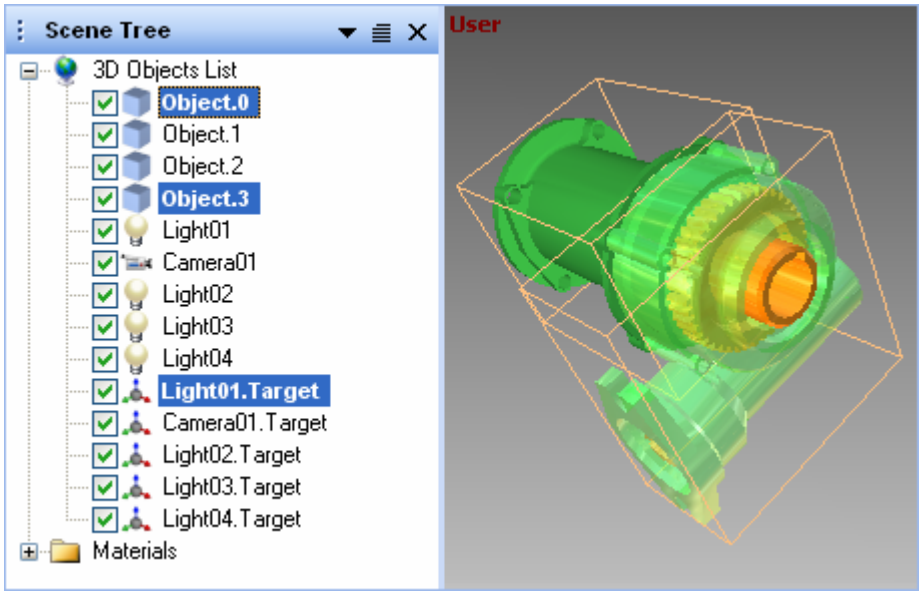

Copyright © Right Hemisphere 2007. All Rights Reserved.

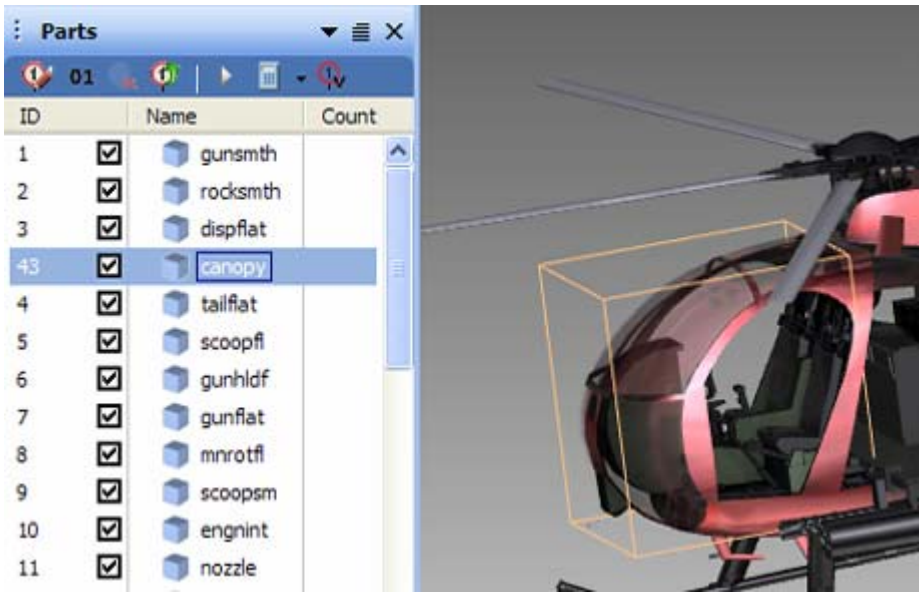

Multiple non-adjacent objects selected

Note: You can also use the Select tool on the 3D Editor toolbar to select non-adjacent objects.

'Window crossing' is very helpful as it means only those objects that the selection region actually crosses are selected.

Procedures

To manually select objects, do one of the following:

- Click the object in the viewport, hold down CTRL and drag in the viewport to select multiple objects.

  Note: The default selection type is rectangular selection. You can change the selection type using the 3D Editor.

- Click a 3D Editor selection tool, hold down CTRL and drag in viewport. All objects within the selection region are selected.

  Note: You can use the Window/Crossing tool to select only those objects that the selection region actually crosses.

- Click the object in the 3D Objects list or Parts panel. Hold down SHIFT to select adjacent objects or CTRL to select non-adjacent objects and click other objects in the list.
- Open the Select Objects dialog (on page 358) and click the objects you want to select. Hold down SHIFT to select adjacent files and folders, or hold down CTRL to select non-adjacent files and folders and click other objects in the list.

Note: To deselect an object hold down the CTRL and shift key and then drag over the required object to deselect it.

To search for and select objects:

1. Click the tab for the type of search you require in the Select Objects dialog.
2. Do one of the following:
   - If you are searching by name, enter the letter/s contained in the name of the objects you want to select.

Copyright © Right Hemisphere 2007. All Rights Reserved.

- If you are searching by size, polygon or vertex count, use the slider to specify the size or count for the objects you want to select.

3. Do one of the following:
   - If you are searching by name, select the Case-sensitive search check box to search for upper and lowercase characters.
   - If you are searching by size, polygon or vertex count, select the Invert selection check box to select the objects that are outside of the specified size or count.

To clear objects from selection, do one of the following:

- Click outside of the model in the viewport.
- Click another object in the 3D Objects list or Parts panel.
- Hold down CTRL+ALT and drag over the selected objects in the viewport.

Merge Options

You can select a model to drag and drop into an existing scene, either straight into the viewport window or into the scene tree window. If this is done using the '**drag + right click**' option, it will display the **Merge Options** dialog.

This dialog asks you to indicate how you want to merge the new model, or object, into the existing model or scene.

The following assumptions are made:

- The new object structure is a replacement for the selected one.
- Geometric meshes will be swapped but the materials will be re-attached.
- The animations will be re-attached.
- If there is extra geometry in the new object, it will be added.
- If there is missing geometry then it will be removed.

Important Note: If the scene tree is not the same, or the levels do not contain any objects that are the same, then a 'reject' message will be displayed.

Procedure

To insert a model into an existing scene:

1. Highlight the model you want to insert.
2. Right click the model, hold down the '**alt**' key, and drag and drop it into the existing scene.
3. In the **Merge Options** dialog select the options you require.
4. Click **OK**.

Interface

Merge Options ('drag + right click')

- **Animation**—Import all animations from the merged scene.
- **Cameras**—Import all cameras from the merged scene.
- **Lights**—Import all lights from the merged scene.

Replace selection

Copyright © Right Hemisphere 2007. All Rights Reserved.

- **Replace materials**—Replace materials in the merged scene with those from the new model.
- **Add new models**—If you are merging a new part, object or assembly into an existing model, the new object, part or assembly will be added to the scene tree.
- **Remove missing models**—If you are merging a new part, object or assembly into an existing model, this option removes missing or deleted parts, objects or assemblies from the scene tree.

Group imported objects—Attach all imported objects into a single group.

Use existing materials—Utilize the materials in the existing scene, do not use imported materials.

OK—Applies and saves the settings, and then closes the dialog.

Cancel—Closes the dialog. Any changes made to the settings are lost.

Help—Opens the relevant Help topic.

Searching for Objects

Object searches are performed by entering search criteria in the Select Objects dialog (on page 358) tab fields. You can search by name, size, polygon count, or vertex count.

As you enter search criteria, by typing letters or moving the sliders, the objects that meet the specified criteria are selected in the objects list immediately. As you continue changing the criteria, so too does the object selection.

In the examples below, the letter 'p' was entered in the field and all objects that contained 'p' in their name were located and selected: group1, group2, persp, and polySurface1.

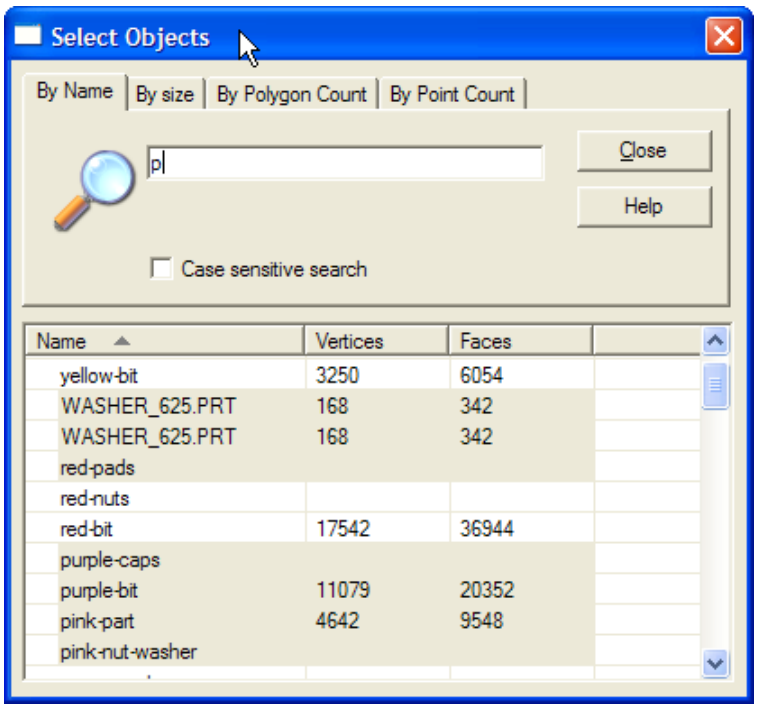

Selecting objects by name: 'p'

Copyright © Right Hemisphere 2007. All Rights Reserved.

Next, the letter 'i' was entered, all objects that contained 'po' in their names were located and selected: pink-part.

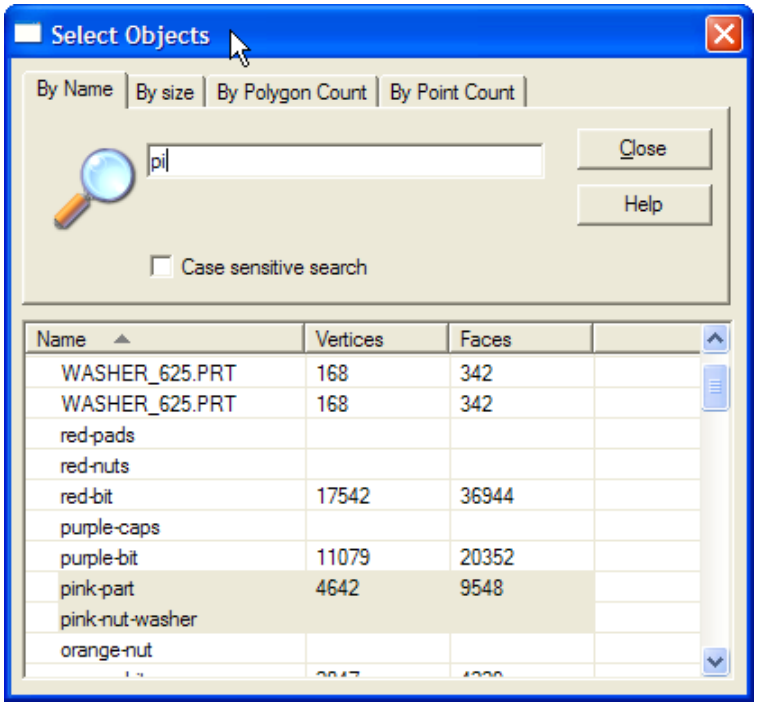

Selecting objects by name: 'pi'

The objects list can be sorted in ascending or descending column order.

Note: Certain rules apply when searching by name as described below.

Searching Rules

Searching by name is performed by entering the letter/s contained in the name of the objects that you want to select. You can use upper and lowercase characters to further define your selection.

The following rules apply:

- You may use for any combination of letters (a through z) and numbers (0 through 9).
- The text entered must be in the correct order. For example, if you want to select objects with the name 'eye' in them, you can enter 'ey' but not 'ee'.
- Punctuation marks such as the period, colon, semicolon, comma, and hyphen are ignored.

Procedures

To select objects manually:

Click the objects you want to select in the Select Objects dialog list. You can use SHIFT to select adjacent files and folders, and CTRL to select non-adjacent files and folders.

To select objects using the selection tools:

1. Click the tab for the type of search you require in the Select Objects dialog.
2. Do one of the following:
   - If you are searching by name, enter the letter/s contained in the name of the objects you want to select.

Copyright © Right Hemisphere 2007. All Rights Reserved.

- If you are searching by size, polygon or vertex count, use the slider to specify the size or count for the objects you want to select.

3. Do one of the following:
   - If you are searching by name, select the 'Case-sensitive search' check box if you want to search for upper and lowercase characters.
   - If you are searching by size, polygon or vertex count, select the Invert Selection check box if you want to select the objects that are outside of the specified size or count.

The objects are selected in the list, in the Scene Components panel and in the viewport.

To sort the objects list:

In the Select Objects dialog, click a column name for the column on which you want to sort. The list is sorted in ascending or descending order depending on the original order. A small triangle on the column name indicates the current order type.

Selecting Materials

Scene Components panel > Scene tree > Materials tab

Materials can be selected manually using the Materials tab, or from directly within the scene. When a material is selected, the material name is highlighted in the Materials tab.

Procedure

To manually select materials, do one of the following:

- Click the material in the Materials tab.
- Press SHIFT and click the material in the scene.

Copyright © Right Hemisphere 2007. All Rights Reserved.

Object Editing Tools

Menu bar > View > Controls and Toolbars > 3D Editor
Right-click menu bar > 3D Editor
Customize Layout dialog > Toolbars tab > Select 3D Editor > OK
Menu bar > View > Controls and Toolbars > Object Position Controls
Right-click menu bar > Object Position Controls
Customize Layout dialog > Toolbars tab > Object Position Controls > OK

Using the 3D Editor toolbar, you can perform various functions on selected 3D objects including selecting, editing, duplicating, and transforming objects, and moving the objects' pivot point. Animation can be edited using the Edit keyframe animation tool in conjunction with the other 3D Editor tools.

Transforming objects can also be performed using the Object Position controls. These give you an interactive display of an object's position, rotation, and scale that allows precise object transformation. This can be helpful for more accurate animation control and alignment for precision training applications or simulations.

This section describes transformation and duplication (on page 99) of objects. Please see 3D Editor toolbar (on page 364) and Object Position controls (on page 328) for further information.

Duplicating Objects

The 3D Editor Move, Rotate, and Scale tools are also used to copy and instance (on page 99) objects. Instancing creates the same object so that the new objects have the same mesh but different transformation matrices (position, orientation, and scale). Copying creates another object but the mesh is no longer shared.

Transforming Objects

Axes 'connections' are displayed between each axis when you transform an object. The type of connection that is displayed depends on the transform tool and the axes on which you are transforming. When you select an axis, it is highlighted in yellow. If you select more than one axis, the axes connection is also highlighted in yellow.

For example, the Move tool displays a square between each axis and if you select more than one axis using the Move tool, both axes and the squares between them are displayed in yellow.

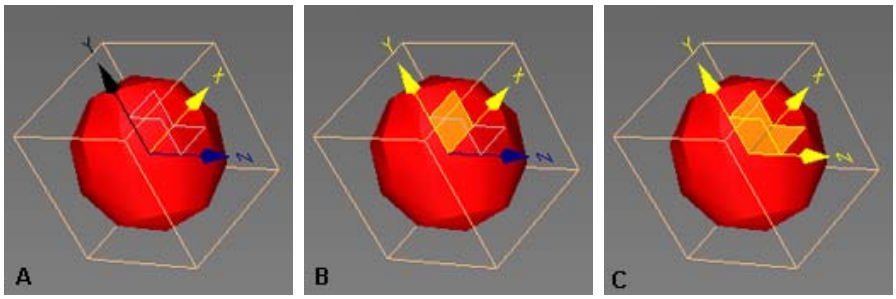

A: Movement along the X axis
B: Movement along the X and Y axes
C: Movement along the X, Y, and Z axes

Copyright © Right Hemisphere 2007. All Rights Reserved.

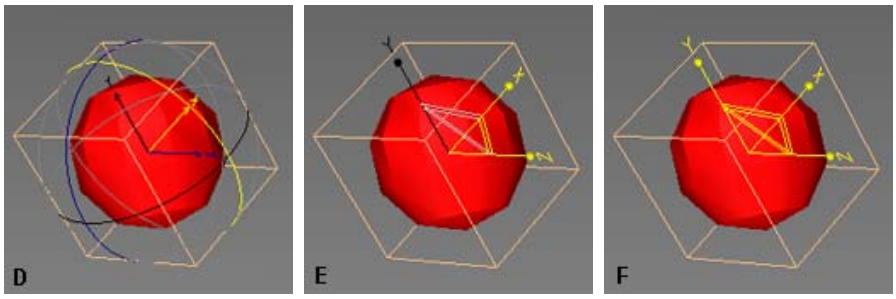

D: Rotation about the X axis
E: Scaling on the X and Z axes
F: Scaling on the X, Y, and Z axes

Transform Rules

Certain rules apply to the 3D Editor toolbar; these determine movement, rotation, scaling, and moving pivot points.

- Objects and pivot points are moved relative to the selected tool, and the axis or axes selected.
- Movement can be performed on no more than two axes at one time. Note that if only one axis is selected, the objects move on that axis. If two axes are selected, the model moves on that surface.
- Rotation can be performed on one axis only at one time. As you rotate, the viewport label (on page 63) displays the degree of rotation.
- Scaling can be performed on one, two and three axes at one time.
- Moving a pivot point can be performed on no more than two axes at one time.
- Rotating a pivot point can be performed on one axis only at one time.

Pull Apart Mode

3D Editor toolbar > Pull Apart

Using the Pull Apart button, , objects can be manually selected from directly within the scene. Selecting the Pull Apart 'freezes' the scene in the viewport, i.e. it is not possible to rotate the scene, only pan and scale, so that individual objects can be selected (highlighted), and pulled apart from the model. It is possible to return to the previously saved view by clicking the Home icon, .

Note: This feature is particularly useful when using Deep Publish or Deep View, however, if an object has an animated sequence, then by clicking the play button, the scene will return to the 'Home' (saved) position before playing the animation, i.e. any object movements, using the 'Pull Apart' feature will be ignored.

Procedure

To pull apart selected objects:

1. Click **Pull Apart** .
2. Select the objects (on page 88) that you want to move.
3. Drag the object to the required position within the scene.

To return to the previously saved view:

Click the Home icon, .

Copyright © Right Hemisphere 2007. All Rights Reserved.

Move Tool

3D Editor toolbar > Move > Drag object along axes
3D Editor toolbar > Move > Object Position controls > Use spinners
Select objects > 3D Editor toolbar > Move > Drag objects

The Move tool  is used to move selected objects relative to the selected axis or axes, and to duplicate objects (on page 99). When the Move tool is selected, the Object Position controls displays the objects' position along the X, Y, and Z axes. You can then move the selected objects by dragging them within the viewport or by using the Object Position controls (on page 328).

Movement can be performed on no more than two axes at one time. Note that if only one axis is selected, the objects move on that axis. If two axes are selected, the model moves on that surface.

Procedure

To move selected objects:

1. Select the objects (on page 88) that you want to move.
2. Click **Move**  on the 3D Editor toolbar.
3. Do one or more of the following:
   - Move the cursor over the objects' axis, and then drag the object.
   - Move the cursor over the objects' axes, and then drag the object.
   - Use the X spinner to move the selected objects along the X axis of the Object Position controls.
   - Use the Y spinner to move the selected objects along the Y axis of the Object Position controls.
   - Use the Z spinner to move the selected objects along the Z axis of the Object Position controls.

To copy objects using the Move tool:

1. Select the objects that you want to copy.
2. Click **Move**  on the 3D Editor toolbar.
3. Do one of the following:
   - Press ALT+CTRL and drag the objects as you would normally to copy the objects.
   - Press CTRL and drag the objects as you would normally to instance the objects.

The selected objects are duplicated.

Copyright © Right Hemisphere 2007. All Rights Reserved.

Rotate Tool

3D Editor toolbar > Rotate > Drag objects along axes
3D Editor toolbar > Rotate > Object Position controls > Use spinners
Select objects > 3D Editor toolbar > Rotate > Drag objects

The Rotate tool  is used to rotate selected objects relative to the selected axis, and to duplicate objects (on page 99).

When the Rotate tool is selected, the Object Position controls displays the objects' rotation around the X, Y, and Z axes. You can then rotate the selected objects by dragging them within the viewport or by using the Object Position controls.

Rotation can be performed on one axis only at one time. As you rotate, the viewport label (on page 63) displays the degree of rotation. See also Gimbal Lock (on page 446).

Procedure

To rotate selected objects:

1. Select the objects (on page 88) that you want to move.
2. Click **Rotate**  on the 3D Editor toolbar.
3. Do one or more of the following:
   - Move the cursor over the objects' axis, and then drag the object.
   - Use the X spinner to rotate the selected objects along the X axis.
   - Use the Y spinner to rotate the selected objects along the Y axis.
   - Use the Z spinner to rotate the selected objects along the Z axis.
   - Right-click over the X, Y, or Z spinner, and then click a predefined degree of rotation to apply to the selected axis.

To copy objects using the Rotate tool:

1. Select the objects that you want to copy.
2. Click **Rotate**  on the 3D Editor toolbar.
3. Do one of the following:
   - Press ALT+CTRL and drag the objects as you would normally to copy the objects.
   - Press CTRL and drag the objects as you would normally to instance the objects.

The selected objects are duplicated.

Copyright © Right Hemisphere 2007. All Rights Reserved.

Scale Tool

3D Editor toolbar > Scale > Drag objects along axes
3D Editor toolbar > Scale > Object Position controls > Use spinners
Select objects > 3D Editor toolbar > Scale > Drag objects

The Scale tool  is used to scale selected objects relative to the selected axis or axes, and to duplicate objects (on page 99). If no axis selected, the objects are scaled by X,Y,Z axis. When the Scale tool is selected, the Object Position controls displays the objects' position along the X, Y, and Z axes. You can then scale the selected objects by dragging them within the viewport or by using the Object Position controls.

Scaling can be performed on one, two and three axes at one time.

Note: Non-uniform scale is possible when a scene is in the Local coordinate system only.

Procedure

To scale selected objects:

1. Select the objects (on page 88) that you want to scale.
2. Click **Scale**  on the 3D Editor toolbar.
3. Do one or more of the following:
   - Move the cursor over the objects' axis, and then drag the object.
   - Move the cursor over the objects' axes, and then drag the object.
   - Use the X spinner to scale the selected objects along the X axis.
   - Use the Y spinner to scale the selected objects along the Y axis.
   - Use the Z spinner to scale the selected objects along the Z axis.

To copy objects using the Scale tool:

1. Select the objects that you want to copy.
2. Click **Scale**  on the 3D Editor toolbar.
3. Do one of the following:
   - Press ALT+CTRL and drag the objects as you would normally to copy the objects.
   - Press CTRL and drag the objects as you would normally to instance the objects.

The selected objects are duplicated.

Copyright © Right Hemisphere 2007. All Rights Reserved.

Move Pivot Point

3D Editor toolbar > Move Pivot Point > Drag objects along axes
3D Editor toolbar > Move Pivot Point > Object Position controls > Use spinners

The Move Pivot Point tool  is used to move the selected objects' pivot points relative to the selected axis or axes. When the Move Pivot Point tool is selected, you can then move the selected objects' pivot points by dragging them within the viewport.

Moving a pivot point can be performed on no more than two axes at one time.

Procedure

To move selected objects:

1. Select the objects (on page 88) that you want to move.
2. Click **Move Pivot Point**  on the 3D Editor toolbar.
3. Do one or more of the following:
   - Move the cursor over the objects' axis, and then drag the object.
   - Move the cursor over the objects' axes, and then drag the object.

Rotate Pivot Point

3D Editor toolbar > Rotate Pivot Point > Drag objects along axes
3D Editor toolbar > Rotate Pivot Point > Object Position controls > Use spinners

The Rotate Pivot Point tool  is used to rotate the selected objects' pivot points relative to the selected axis. When the Rotate Pivot Point tool is selected, you can then rotate the selected objects' pivot points by dragging them within the viewport.

Rotating a pivot point can be performed on one axis only at one time.

Procedure

To move selected objects:

1. Select the objects (on page 88) that you want to move.
2. Click Rotate **Pivot Point**  on the 3D Editor toolbar.
3. Move the cursor over the objects' axis, and then drag the objects.

Copyright © Right Hemisphere 2007. All Rights Reserved.

Duplicating Objects

When you duplicate an original object, it is either 'instanced' or copied depending on the method you use (on page 93).

Copying

Copying creates an additional object that is identical to the original, but the mesh is no longer shared between the objects. Therefore, the actual geometry of the object is saved multiple times. These objects are now called the 'original objects'.

Instancing

When a model contains multiple objects with identical geometric meshes, the actual geometry of the object is saved only once; the 'original object'. The object is then duplicated as many times as the object is used in the model, for the different locations and orientations throughout the scene.

'Instanced objects' have the same mesh as the original, but a different transformation matrix (position, orientation, and scale). For example, if a spark plug is used eight times in a V8 engine, seven instances are created that point to the original object and it's geometry.

Instancing objects reduces the size of the file, helps save memory, decreases render times, and increases the data transfer rate.

When you edit the geometry of an instanced object, all the objects based on it are updated to reflect the changes. Transforming, applying modifiers, and adding animation to individual objects does not modify any other instances of that object.

Note: If you modify an object's material, the material on all of the other object instances is also modified.

As all instanced objects point to the same polygonal mesh, you can see which mesh this is in the Object Properties dialog. The example below shows a circuit board model with numerous instanced objects, three of which point to the polygonal mesh number 3.

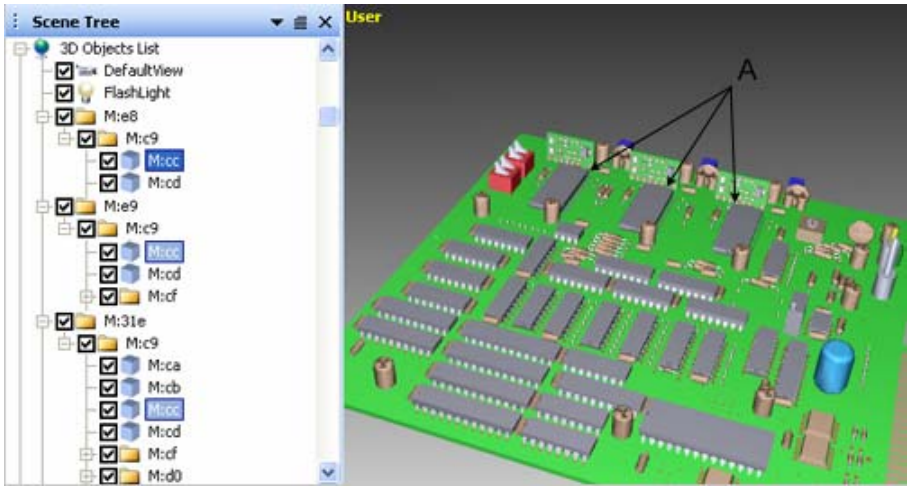

A: Instances of the 'M:cc' object

Copyright © Right Hemisphere 2007. All Rights Reserved.

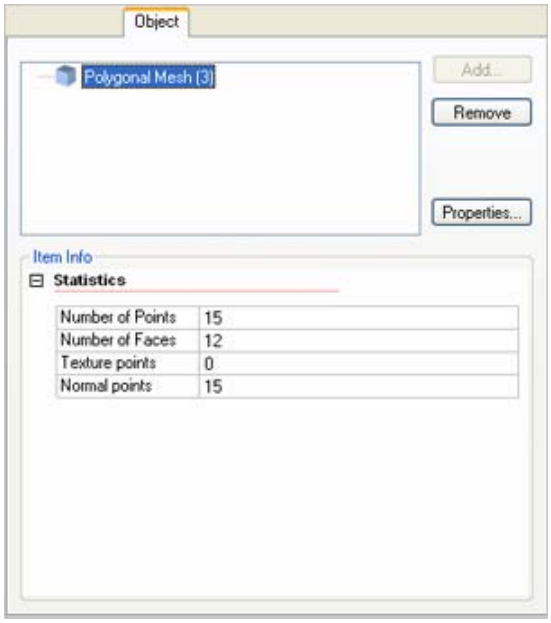

Object tab for the instanced 'M:cc' object

Mirroring Objects

Menu bar > Tools > 3D Tools > Mirror
Right-click viewport > Tools > Mirror

When you mirror an original object, it is generally 'instanced', but can be duplicated if required.

'Mirrored objects' by default, have the same mesh as the original, but a different transformation matrix (position, orientation, and scale). For example, if a spark plug is used eight times in a V8 engine, you can use the mirror tool to create seven instances that point to the original object and its geometry.

Instancing objects reduces the size of the file, helps save memory, decreases render times, and increases the data transfer rate.

As all instanced objects point to the same polygonal mesh, you can see which mesh this is in the Object Properties dialog for the mirrored object.

Making Objects Unique

Right-click viewport with object selected > Make Unique

When you mirror an original object, it is generally 'instanced', making an object unique reinstances it and turns it into a true copy with no links back to the original model.

Instancing objects reduces the size of the file, however, making a unique copy of an object increases the file size, decreases the transfer rate and increases render times. Instances can be converted to copies by using the Make Unique tool.

Copyright © Right Hemisphere 2007. All Rights Reserved.

Showing and Hiding Objects

Scene Components panel > Scene tree > Select object check box
Scene Components panel > Scene tree > Clear object check box
Right-click object in viewport > Hide Selection/Hide Unselected/Hide All Objects
Right-click object in viewport > Show Selection/Show All Objects
Select object in Scene tree > Keyboard H

The 3D Objects list (on page 332) check boxes and right-click menu (on page 414) can be used to show and hide objects. You can also use the 3D viewport right-click menu (on page 390) to show and hide objects.

The Scene tree check boxes respect hierarchy if it is present. For example, clearing the highest check box in a hierarchy clears all subordinate check boxes.

Procedures

To hide objects, with the objects displayed do one of the following:

- Clear the objects' check boxes in the 3D Objects list.
- Select the objects (on page 88) you want to hide, right-click in the viewport or over the objects in the 3D Objects list, and then click **Hide Selection** to hide all selected objects.
- Select the objects you want to show, right-click over the objects or over the objects in the 3D Objects list, and then click **Hide Unselected** to hide all unselected objects.
- Right-click in the viewport or 3D Objects list and click **Hide All Objects** to hide all objects.

To show objects, with the objects hidden do one of the following:

- Select the objects' check boxes in the 3D Objects list.
- Select the objects (on page 88) you want to show, right-click in the viewport or over the objects in the 3D Objects list, and then click **Show Selection** to show all selected objects.
- Right-click in the viewport or 3D Objects list and click **Show All Objects** to show all objects.

To toggle object and sub-object display:

Select the object in the Scene tree and press H on your keyboard.

Copyright © Right Hemisphere 2007. All Rights Reserved.

Grouping and Hierarchies

The Scene Components panel (on page 329) displays all objects in the current scene in a tree-view hierarchy including bone, light, camera, material, part, and animation objects.

Windows hierarchy conventions apply to the panel. For example, if you select an object's parent check box, all child objects are also selected. However, pressing CTRL and selecting a parent check box, selects only that object.

If an object contains sub-objects ('child' objects), a plus sign [+] appears next to the 'parent' object. You can expand the parent objects and materials to show sub-objects by clicking the plus sign [+], and you can collapse an object to hide its sub-objects in the Scene tree by clicking on the minus sign [-].

You can create groups of objects; this is useful for animation and assembly files. You can also collapse object hierarchies into a single mesh. Note that if you collapse individual objects that are located within containing folders, all the objects are collapsed into a single mesh and are given an automatically generated name in the 3D Objects list. If you select a folder to collapse, everything within that folder is collapsed into a single mesh, and the name of the folder remains the same.

Note: Collapsing the hierarchy deletes any animation that may exist on sub-objects. If the scene is saved the original hierarchy cannot be recovered.

Procedures

To create a group:

1. Select the objects you want to group.
2. Do one of the following:
   - Right click in the 3D Objects list or Parts panel.
   - Right-click in the viewport.
3. Do one of the following:
   - Click **Create Group**. A new group object is created containing the selected objects.
   - Click **Attach to Group** and click the object under which you want the objects to be grouped. The selected objects are grouped under the object on which you clicked.

To separate a group:

1. Select the group in the viewport, 3D Objects list, or Parts panel.
2. Right click and click **Ungroup**.

To attach objects to an existing group:

1. Select the objects you want to attach to a group.
2. Do one of the following:
   - Right click in the 3D Objects list or Parts panel.
   - Right-click in the viewport.
3. Click **Attach to Group**.
4. Click the group into which you want to attach the objects. The selected objects are added to the group on which you clicked.

Copyright © Right Hemisphere 2007. All Rights Reserved.

To detach objects from a group:

1. Select the objects you want to detach.
2. Right click in the 3D Objects list or Parts panel.
3. Click **Detach from Group**.

To delete a group:

Right-click the group in the 3D Objects list or Parts panel and click **Delete**.

To collapse an object hierarchy:

1. Do one of the following:
   - Select the objects that you want to collapse within their containing folder in the 3D Objects list.
   - Select the folder in the 3D Objects list for which you want to collapse its objects.
2. Right-click over one of the selected objects and choose **Tools > Collapse Hierarchy**.

Renaming and Deleting Objects

Scene Components panel > Scene Tree > 3D Objects list
Scene Components panel > Parts panel
Scene Components panel > Layers panel
Object Properties dialog > Transformation tab
Object Properties dialog > Object tab

Objects can be renamed and deleted using a number of methods; from within the viewports (on page 299), 3D Objects list (on page 329), Parts panel (on page 356), Layers panel (on page 357), and Object Properties dialog (on page 335).

Procedures

To rename a material, do one of the following:

- Right-click the material you want to rename in the 3D Objects list, Parts panel, or Layers panel, click **Rename**, type the name you want, and then press ENTER.
- Open the Object Properties dialog for the object you want to delete, click the Object tab, type the name you want in the Name field, and then click **OK**.

To delete objects, do one of the following:

- Select the objects in the viewport, 3D Objects list, Parts panel, or Layers panel, and then press DELETE.
- Right-click the objects in the viewport, 3D Objects list, Parts panel, or Layers panel, and then click **Delete Objects**.
- Open the Object Properties dialog for the object you want to delete, click the Object tab, select the object in the Object window, and then click **Remove**.

Copyright © Right Hemisphere 2007. All Rights Reserved.

Metadata Dialog

This option lets you attach or edit metadata in individual objects or the complete scene. Metadata will be exposed on a per-scene and per node basis, and can be viewed, created and edited via the properties dialog.

Interface

Metadata tab

- **Category**—This is set to avoid conflict between different applications.
- **Key**—The key name.
- **Value**—The metadata value.
- **Type**—BOOL (true or false), INT (32 bit integer), STRING (unicode string), FLOAT (floating point number) and two special "collection" classes, OBJECT and ARRAY:
  - An **OBJECT** is analogous to a Javascript Object, and is like a sub-directory for metadata. You can double click to "descend" into an object (similar to browsing folders and double clicking) and view/edit/create new data inside.
  - An **ARRAY** is analogous to a Javascript Array, and stores a list of values numbered from zero to n-1. You can descend into an array and add new items similar to OBJECT.
- **Set**—Applies the settings.

OK—Closes the dialog and saves the current settings.

Cancel—Closes the dialog.

Help—Opens the relevant Help topic.

Procedures

To create a new value:

1. Choose a category, or create one, if one is not already selected.
2. Type a key name in the key combo box.
3. Type a value in the edit control.
4. Click **Set**.

To edit a value:

1. Select a value in the list view or pick from the key combo box.
2. Edit the value in edit control.
3. Click **Set**.

To delete a value:

1. Select one or more values in the list view.
2. Press **Delete**.

see also Metadata Browser (on page 326)

Copyright © Right Hemisphere 2007. All Rights Reserved.

Materials

.Scene Components panel > Materials

Materials are composed of composite layers that reflect the material properties. They are designed to principally reflect those attributes associated with maps and applied textures (on page 107), rather than color or scalar variables.

Materials can be controlled in a number of ways using the Materials folder (on page 329), Materials list (on page 356), Display menu (on page 257), and Object (on page 335) and Material Properties (on page 350) dialogs. The Materials list displays the materials as thumbnails, the number of textures that have been applied to each material, the maps to which the textures have been applied, if the opacity had been modified, and if the UV offsets have been modified.

You can choose to display the scene's default material, or any other materials that have been applied to the scene's objects. Note that when the default material is used, the scene's materials are not displayed.

A right-click menu (on page 415) is available from where you can perform various material functions including creating new materials, removing unused materials, and merging duplicate materials.

Keyboard shortcuts (on page 438) are available for the display of materials and textures; the viewport label (on page 63) shows whether textures are being hidden.

Procedures

To create a material:

Right-click in the Materials folder or Materials list, and then click **Create Material**.

To view materials:

Open the Materials folder or Materials list.

To add a material to an object, do one of the following:

- Drag a material from the Materials folder or Materials list to the object in the scene.
- Drag a material from Windows Explorer to the object in the scene.

To remove a material from objects:

Drag the default material from the Materials folder or Materials list to the object in the scene. All materials are replaced by the default material.

To remove unused materials:

Right-click in the Materials folder click **Remove Unused Materials**.

To merge duplicate materials:

Right-click in the Materials folder click **Merge Duplicate Materials**.

To toggle the display of materials, do one of the following:

- Choose **Display > Materials > Use Default Material** on the menu bar.
- Press CTRL+M on your keyboard.

Copyright © Right Hemisphere 2007. All Rights Reserved.

To duplicate a material:

1. Select the material (on page 93) you want to duplicate.
2. Right-click in the Materials folder or Materials list and click **Duplicate Material**.

To delete a material:

1. Select the material you want to delete.
2. Right-click in the Materials folder or Materials list and click **Delete Material**.

To rename a material:

1. Right-click the material you want to rename in the Materials folder or Materials list.
2. Click **Rename Material**.
3. Type the name you want and press ENTER.

To select objects associated with a material, do one of the following:

- Click the material in the Materials list for which you want to select the objects.
- Right-click the material in the Materials list for which you want to select the objects, and then click **Select Objects**.

Textures

File list > Textures tab > Drag image to object
Material Properties dialog > Maps tab > Select map > Select texture > Open > OK

Texture files (actual photographs or other raster images) can be applied to a surface of an object in order to give it a more realistic appearance. Without textures, 3D objects are practically colored geometry with some shading.

Textures are applied to the various maps contained within each material. For example, the Diffuse, Bump, and Opacity maps. The effect that a texture has on an object is defined by the map to which it is applied (on page 352) and that map's properties. Applying the same texture to different maps, you gain very different results as shown below.

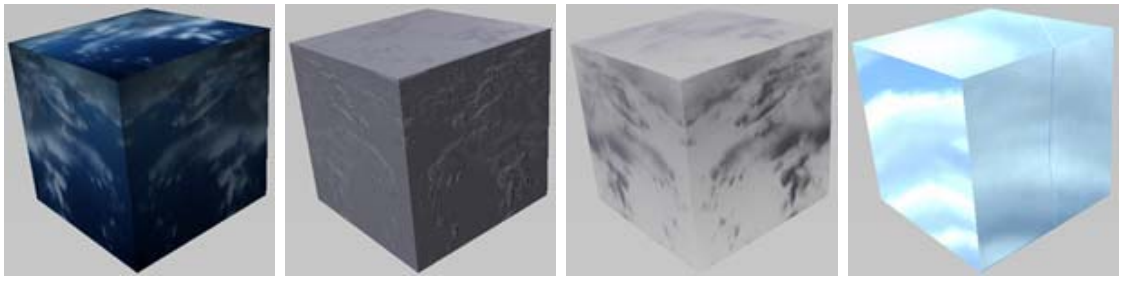

Identical texture: Diffuse map/Bump map/Opacity map/Reflection map

Many texture map properties can be saved into a file using the Texture Maps tab (on page 59).

Note: If a diffuse texture is present, you can use the Materials tab (on page 58) to set the diffuse color to a color of your choice.

For 3D models in Deep Exploration, any 2D format is supported as a texture, provided the 3D model format supports the 2D format type and that the 2D format is supported by Deep Exploration. Please see Appendix A: 2D File Formats (on page 449) for a list of supported 2D formats.

Copyright © Right Hemisphere 2007. All Rights Reserved.

External Textures

Many textures that are used in 3D scenes are located within the 3D file itself; other 3D scenes reference textures that are located outside of the file. These are called 'external textures'.

If a file includes external textures, an 'External files' link is displayed in the Information bar (on page 323) from where you can display information about those textures including the location and status of each file.

If Deep Exploration cannot locate the external references, you must manually add the paths (on page 294) where the texture images are stored to Deep Exploration.

Procedures

To add a texture to a map, do one of the following:

- Drag a texture from the Textures tab (on page 388) to the object in the scene.
- Open the Material Properties dialog (on page 350) for the material, click the Maps tab, select the map to which you want to add the texture, click Browse, navigate to and select the texture you want, click **Open**, and then click **OK**.

To toggle the display of textures, do one of the following:

- Choose **Display > Materials > Show Textures** on the menu bar.
- Press CTRL+T on your keyboard.

Copyright © Right Hemisphere 2007. All Rights Reserved.

Animation

A range of animation tools can be used to create new scene animations, and to modify animation within files imported from other applications system.

Animation supports object grouping, the display of motion paths, changing pivot points, and 'keyframes'. A key is a value fixed in time; single value keys such as opacity, and vector key such as position and color. Keys can be created and edited using the 3D Editor toolbar (on page 364) or the timeline (on page 318).

The timeline shows time progressing in a graph-like display beginning at the left. It shows the keys for the currently selected object and is used to edit those keys. Various other animation controls and options are available with which to create and modify animations.

The Animation tree (on page 357) displays a list of all the components that are associated with any animation in the current 3D file. A right-click context menu (on page 417) is also available from where you can perform a number of functions relating to animation.

It is possible to create both a linear type animation where an object moves from one point to another like a pool ball bouncing off cushions, and a more fluid animation, where the object takes smoother corners. Animations can also be made cyclic; the entire animation is made to repeat from beginning to end. Repeated animation is displayed as dotted red lines in the timeline.

The following is an example of how to create an animation using the timeline, with a scene that includes the three objects as shown below.

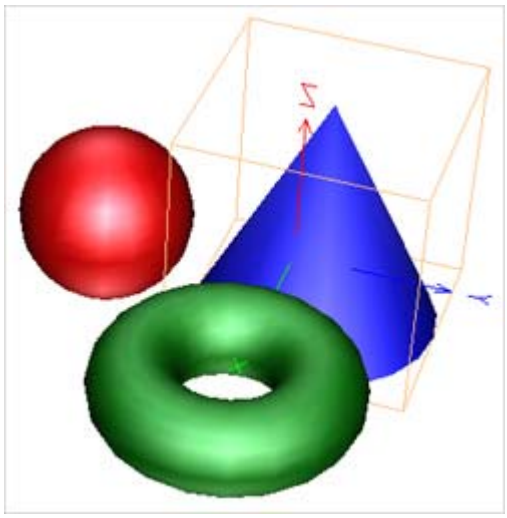

Example: Animating a scene

Procedures

To create a simple animation:

1. Display the animation timeline (on page 313) and drag the bottom edge of the timeline downwards so that it is displayed in about 1/3 of the total screen space.
2. Display the 3D Editor toolbar and click **Edit Keyframes** . A red box surrounds the time/frame slider for animation control (on page 314).

   Note: If no sequence is found within the current file, one is created automatically.
3. Click one of the 3D Editor navigation tools. For example, Move, Rotate, or Scale.

Copyright © Right Hemisphere 2007. All Rights Reserved.

4. Select the object or objects that you want to animate first.
5. Move the time/frame slider (on page 314) in the timeline to the position to which you want to move the objects. The timeline's purple 'time/frame line' moves with the time/frame slider. This line shows the current time/frame. You can also move the line and time/frame slider by clicking at the frame you require in the timeline.
6. Move the objects along their axes to the position that you require. As you move the objects, the related tracks, keys and axes curves are re-positioned in the timeline.
7. Expand the current sequence in the timeline to view the related tracks, keys and axes curves.
8. Move the time/frame slider to the next position to which that you want to move the objects.
9. Move the objects along their axes to the next position that you require.

Note: You can slide the time/frame slider back and forth between the frames to see the animation you have just created. The animation is currently 'linear (on page 111)': straight lines between the keys resulting in a mechanical type of animation. You can apply TCB interpolation (on page 111) to create a smooth rate of change through and between keys.

10. Right-click in the timeline and choose **Track Properties > TCB Interpolation**. The axes curves are smoothed out.
11. Slide the time/frame slider back and forth between the frames. The objects move smoothly along the axes.
12. Move to the last frame in which you positioned the objects.
13. Right-click in the timeline, and then choose **Track Options > End Cyclic**. This repeats the animation continuously. The repeats are displayed as dotted lines in the timeline.
14. Click **Forward**  on the Animation controls to play the animation.

To edit an animation using the timeline:

1. Open the file (on page 39) for which you want to edit the animation.
2. Display the animation timeline.
3. Select the keys for the objects you want to edit.
4. Drag the key around the timeline.

To edit an animation using the 3D Editor toolbar:

1. Open the file for which you want to edit the animation.
2. Click **Edit Keyframes** on the 3D Editor toolbar.
3. Select the objects you want to edit.
4. Use the 3D Editor transformation tools to edit the objects.

A key is created for the current transformation type in the current frame every time you edit the animation.

To manually advance through an animation:

Drag the time/frame slider to move forwards and backwards through the animation.

Copyright © Right Hemisphere 2007. All Rights Reserved.

Sequences

Animation Options dialog > Add
Animation Options dialog > Edit
Animation Options dialog > Delete

Certain files may have animated sequences, that is, a sequence of 3D files with separate files for each animation frame. These sequences can be modified from within the Animation Options dialog (on page 315).

Note that you can create animated explosions using the Explode Objects tool (on page 130); useful for generating 2D illustrations and dynamic 3D documents.

Procedures

To add a sequence:

1. Open the file (on page 39) to which you want to add a sequence.
2. Open the Animation Options dialog and click **Add**.

To edit a sequence:

1. Open the file to which you want to edit a sequence.
2. Open the Animation Options dialog, click the sequence in the Sequence window, and the click **Edit**.
3. Select the frame number where you want the animation to begin in the Start field.
4. Select the frame number where you want the animation to end in the End field.
5. Select the frames per second in the FPS field.

To delete a sequence:

1. Open the file from which you want to delete a sequence.
2. Open the Animation Options dialog, click the sequence in the Sequence window, and the click **Delete**.

The sequence is deleted immediately.

Copyright © Right Hemisphere 2007. All Rights Reserved.

Interpolation Methods

Two kinds of interpolation methods can be applied to keys: linear and TCB (tension, continuity, and bias - smooth).

Linear Interpolation

The Linear interpolation method creates a uniform rate of change between keys that manifest in a mechanical type of animation. It requires only two keys to function. This method always creates straight lines between the keys with sharp corners at the key itself.

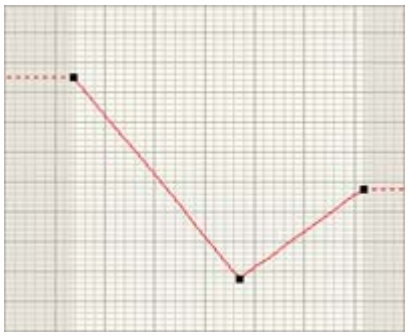

Linear interpolation between 3 keys

TCB Interpolation

The TCB interpolation method creates a smooth rate of change through and between keys. If the previous and next keys also use TCB interpolation, the shape of the curve near the previous or next keys also change. It requires at least three keys to be able to see the smooth change.

A key with linear interpolation in a series of segments of smoothly interpolated keys creates a sharp corner at a point in time where the linearly interpolated key is located. This method is helpful want you want to softly animate the movement of a model.

Note: TCB values affect the curvature of the smoothly interpolated keyframes but they can also affect the speed.

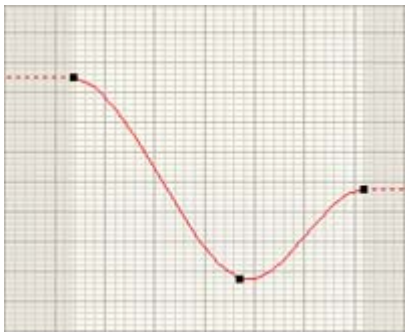

TCB interpolation between 3 keys

TCB Interpolation Values

TCB interpolation uses three values to fine tune the appearance of the keys: tension, continuity and bias.

- **Tension**: Controls how sharply the curve bends at the key.
- **Continuity**: Controls how smoothly the curve moves 'through' the key.
- **Bias**: Controls the balance between the curve before and after the key.

Copyright © Right Hemisphere 2007. All Rights Reserved.

The following examples, show keys with differing TCB values.

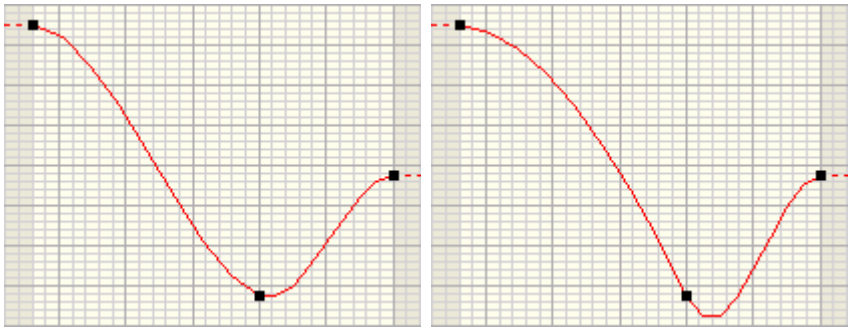

Tension, bias, and continuity = 0 / Tension = -3, bias and continuity = 0

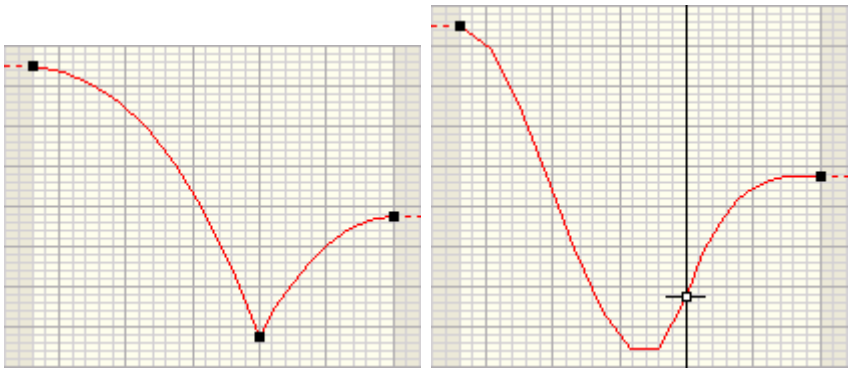

Tension and bias = 0, continuity = -3 / Tension and continuity = 0, bias = -3

Copyright © Right Hemisphere 2007. All Rights Reserved.

Audio and Video Files

Many audio and video files can be viewed in Deep Exploration, and you can save to a number of audio and video formats.

When you open a video (on page 361) or audio (on page 320) file, controls are displayed that allow you to control the file. For example, you can play, pause and lower the volume of video and audio files.

See also Appendix C: Audio File Formats (on page 542) and Appendix D: Video File Formats (on page 545).

Note: You must 'render to an .avi file (on page 265)' to save a file to the .avi format.

Copyright © Right Hemisphere 2007. All Rights Reserved.

Benchmarking a File

Menu bar > Tools > 3D Tools > Benchmark
Right-click 3D viewport > Tools > Benchmark

You can use the Benchmark command to compile information about the current file, the speed of your computer and graphics card in relation to the current file, and to export the file to a text file. You can set various benchmark settings (on page 279) including selecting the number of scene renders to ignore before the benchmark process begins and the number of scene render samples that are used to calculate the rendering speed.

When you perform the benchmark process, the current file is opened and rotated on your monitor while Deep Exploration compiles the information. It then sends the information to a text file.

At any point while the file is displayed on your monitor, you can press any key on your keyboard to cancel the benchmark process.

The following is an example of the information compiled during the benchmark process:

Benchmark 2004-03-01-14-49-17

Module name: benchmark.x3d (3.5.4.391)
DE version: 3.5.0.391
api version: 0x8d

Windows XP 5.1 (Build 2600) Service Pack 1
CPU: INTEL Pentium-III
Number of processors: 1
Total Physical Memory: 511MB
Total Virtual Memory: 2047MB

Information from x3d driver:
viewport_NVIDIAOPENGL
NVIDIA Corporation Quadro FX 1000/AGP/SSE 1.4.0
Window Size 1280 x 1024
NV4_DISP 1280 x 1024 32 bit @ 75 MHz

For scene file:
U:\Product Development\QA-Testing\Test Models\animated\C&M 2K E tongue.lws
Materials: 3
Vertices: 6 858
Faces: 10 261

DECLARED TIME PERIOD 20 ,SECONDS
REAL TIME PERIOD 19.989 ,SECONDS

(1) count 1443 (omitted frames 0)
71.4286 / 109.357 / 142.857 fps

Procedures

To benchmark a file:

1. Do one of the following:
   - Click **Tools > 3D Tools** on the menu bar and then click **Benchmark.**
   - Right-click in the 3D viewport and choose **Tools > Benchmark**.
2. Make the selections you require.
3. Click **Start**.

The benchmark text file is saved in the Benchmark folder where Deep Exploration is installed on your computer. The file is opened and rotated while the application compiles the information.

To cancel the benchmark process:

Press any key on your keyboard.

Copyright © Right Hemisphere 2007. All Rights Reserved.

CADTools

Menu bar > View > Controls and Toolbars > CADTools
Right-click menu bar > CADTools
Customize Layout dialog > Toolbars tab > Select CADTools > OK

CADTools is a set of tools used to optimize 3D files for display and manipulation. Polygon reduction tools can significantly reduce the density of 3D models with minimal loss in visual definition resulting in a more interactive performance, and faster download speeds for Web-based 3D applications.

In certain cases polygon reduction requires lots of RAM. The amount varies depending upon file type and complexity. Separate objects can be selected and reduced to minimize memory use.

Using CADTools, you can:

- Invert faces and normals (on page 116) to reverse the order of the points and 'flipping' the direction of the normals on the faces of the model.
- Unify normals (on page 117) to align all normals in the same direction.
- Remove internal parts (on page 119) to reduce the file size.
- Remove small parts (on page 120) to reduce the file size.
- Separate meshes (on page 121) to group an object that is grouped under one object but made up of a number of separate meshes, as separate meshes under the objects name.
- Join equal points (on page 122) for more efficient models.
- Reduce the polygon count (on page 123) of a model while preserving defining visual features.
- Duplicate object polygons (on page 130) to display the same surface on both faces.
- Weld disjointed faces (on page 127) and mend cracks between poorly joined sections, overlapping geometry, and duplicated edges.
- Apply different colors to adjacent objects (on page 133) for easy identification.
- Explode models (on page 130) to clearly display assemblies in a traditional illustration style.
- Simulate global illumination (on page 184) utilizing the ambient occlusion technique, to render models as if they are surrounded by a dome of light.
- Modify the settings for certain tools.
- Apply UV mapping (on page 198) coordinates to selected models.

Copyright © Right Hemisphere 2007. All Rights Reserved.

Inverting Faces and Normals

CADTools toolbar > Invert Faces
CADTools toolbar > Invert Normals
CADTools toolbar > Invert Faces and Normals
Right-click 3D viewport > Tools > Invert Faces

3D applications have polygon faces that are either double-sided or single-sided. Single-sided faces are visible on one side and invisible on the other, resulting in higher rendering rates for real-time 3D software. Also, certain applications define 'visible' as a face that has points defined in a clockwise order relative to the viewing camera. With others, it is points defined in a counter-clockwise order.

For example, if a model looks 'inside-out' when imported, the original application either supported double-sided faces, or faces that were defined to be visible if counter-clockwise.

As there is no way to define which faces are visible when importing models, some faces and/or surface normals may be incorrectly orientated (facing backwards). You can use the Invert tools to reverse the order of the points and 'flipping' the direction of the normals on the faces of the model.

If you select one or more objects, only the faces or normals of the selection are reversed. If no objects are selected, all faces or normals of the model are reversed.

Procedure

To invert faces and/or normals:

1. Open a 3D file (on page 39).
2. Select the objects for which you want to invert faces and/or normals.
3. Do one of the following:
   - Click **Invert Faces**  to invert faces only.
   - Click **Invert Normals**  to invert surface normals only.
   - Click **Invert Faces and Normals**  to invert faces and surface normals.

The objects' faces and/or normals are inverted.

Copyright © Right Hemisphere 2007. All Rights Reserved.

Unifying Normals

Menu bar > Tools > 3D Tools > Unify Normals
CADTools toolbar > Unify Normals
Right-click 3D viewport > Tools > Unify Normals

The Unify Normals tool can be used to orient all normals correctly, that is, align them in the same direction. This is helpful when imported geometry is not properly joined, resulting in surface normals being oriented in the wrong direction, and models displaying incorrectly.

You can choose the action for objects with incorrectly aligned normals: select, highlight, or mark as double-sided. If you choose to select objects, you can then use other CADTools tools to correct the selected faces. For example, you could invert the normals (on page 116).

Procedure

To unify normals:

1. Open a 3D file (on page 39).
2. Click **Unify Normals**  on the CADTools toolbar.
3. Make your selections (on page 118) as required and click **OK**.

The objects are selected, highlighted, or marked as double-sided depending on your selection.

Unify Normals Dialog

CADTools toolbar > Unify Normals

You can modify the settings for unifying normals from models during the process.

Procedure

To open the Unify Normals dialog:

Click Unify Normals  on the CADTools toolbar.

Interface

Scene Analysis—Used to set the type of analysis to apply to the scene.

- **Skip hidden meshes**—Processes visible meshes only.
- **Apply to polygons**—Processes the model at the polygon or the object level. Note that this may slow down the operation.

Action—Used to determine the action taken for objects when the normals orientation cannot be identified. That is, whether the normals are correctly or incorrectly aligned.

- **Select**—Selects any objects with incorrectly aligned normals in the viewport.
- **Highlight**—Highlights any objects with incorrectly aligned normals in the viewport. You can use the color selector to select a highlight color.
- **Mark as double-sided**—Converts any objects with incorrectly aligned normals to double-sided.

Copyright © Right Hemisphere 2007. All Rights Reserved.

Scene Processing Level—Determines the level of speed and quality at which to process the scene.

OK—Applies the process, closes the dialog, and saves the settings.

Cancel—Cancels the process and closes the dialog. Any changes made to the settings are lost.

Help—Opens the relevant Help topic.

Removing Internal Parts

Menu bar > Tools > 3D Tools > Remove Internal Parts
CADTools toolbar > Remove Internal Parts
Right-click 3D viewport > Tools > Remove Internal Parts

Some scenes, especially those containing CAD models, can comprise many internal objects. If an application does not need to 'see' internal objects, the model can be simplified by hiding or deleting these objects. This is helpful in reducing the file size if you choose to delete internal objects.

Note that this function cannot be reversed.

Procedure

To remove internal parts:

1. Open a 3D file (on page 39).
2. Click **Remove Internal Parts**  on the CADTools toolbar.
3. Make your selections (on page 119) as required and click **OK**.

The internal objects are hidden, selected, or deleted depending on your selection.

Remove Internal Parts Dialog

CADTools toolbar > Remove Internal Parts

You can modify the settings for removing internal parts from models during the process.

Procedure

To open the Remove Internal Parts dialog:

Click **Remove Internal Parts**  on the CADTools toolbar.

Interface

Scene Analysis—Used to set the type of scene analysis you require.

- **Skip hidden meshes**—Processes visible meshes only.
- **Ignore transparency**—Does not display any internal objects that are visible through transparent surfaces, that is the internal parts are removed.

Action—Used to determine the action taken with all objects matching the selection criteria.

Copyright © Right Hemisphere 2007. All Rights Reserved.

- **Hide**—Hides any internal objects in the viewport.
- **Select**—Selects any internal objects in the viewport.
- **Hide and Select**—Hides and selects any internal objects in the viewport.
- **Delete**—Deletes any internal objects from the scene.

Scene Processing Level—Determines the level of speed and quality at which to process the scene.

- **Max speed**—Fastest speed with minimum quality.
- **Max quality**—Slow speed with maximum quality.

OK—Applies the process, closes the dialog, and saves the settings.

Cancel—Cancels the process and closes the dialog. Any changes made to the settings are lost.

Help—Opens the relevant Help topic.

Removing Small Parts

CADTools toolbar > Remove Small Parts

Some scenes, especially those containing CAD models, can comprise many objects with varying scales. If an application does not need to 'see' smaller objects, the model can be simplified by removing these objects. This is helpful in reducing the file size. You can also modify the settings for removing small parts.

To remove small objects, you must first specify the size of the parts that you want removed. The model and object size is taken as the size of the diagonal of the containing bounding box.

Note that this function cannot be reversed.

Procedure

To remove small parts:

1. Open a 3D file (on page 39).
2. Click the Remove Small Parts down arrow on the CADTools toolbar.
3. Click **Settings**.
4. Make your selections as required, and then click **OK**.
5. Do one of the following:
   - Select the objects from which you want to remove small parts.
   - Right-click the required assembly in the Scene Tree window and click **Select Sub Objects**.

5. Click **Remove Small Parts** .

All parts beneath the specified size are removed from the selected objects.

Copyright © Right Hemisphere 2007. All Rights Reserved.

Remove Small Parts Settings

CADTools toolbar > Remove Small Parts > Settings

You can modify the settings for removing small parts from models.

Procedure

To modify the remove small parts settings:

1. Click the Remove Small Parts down arrow on the CADTools toolbar.
2. Click **Settings**.
3. Make your selections as required and click **OK**.

Interface

Tolerance—Determines the tolerance level below which all objects are removed. The percentage values are expressed as a percentage of the size of the object's bounding box diagonal. The unit values are expressed as unit size based on those used by the model. These values are directly related to the position of the slider. For example, dragging the slider halfway between 0% and 100% displays approximately 50%.

- **Units**—Used to enter the unit values below which all objects are removed. These values are expressed as unit size based on those used by the model, and are directly related to the position of the slider.
- **Percent**—Used to enter the percentage values below which all objects are removed. These values are expressed as a percentage of the size of the object's bounding box diagonal, and are directly related to the position of the slider.

Scene Bounding Box—Displays the bounding box diagonal.

OK—Closes the dialog and saves the settings.

Cancel—Closes the dialog. Any changes made to the settings are lost.

Defaults—Restores the default settings.

Help—Opens the relevant Help topic.

Copyright © Right Hemisphere 2007. All Rights Reserved.

Separating Meshes

CADTools toolbar > Separate Meshes

Using this tool, you can group an object that is grouped under one object but made up of a number of separate meshes, as separate meshes under the objects name.

When created, the sub-objects are labelled 'objectname_mesh_n', where 'n' is a number with three digits of leading zero padding.

Note that this function cannot be reversed.

Procedure

To separate meshes:

1. Open a 3D file (on page 39).
2. Select the object for which you want to separate meshes.
3. Click **Separate Meshes**  on the CADTools toolbar.

The object's meshes are separated.

Joining Equal Points

CADTools toolbar > Join Equal Points
Right-click 3D viewport > Tools > Join Equal Points

This tool is used to reduce polygons by joining all the points that have equal (coincident) x,y,z coordinates. This smooths the lines and reduces the number of polygons resulting in a smaller file. Note that joining equal points processes points on an object by object basis, and does not look at coincident points between adjacent objects.

To join equal points, you must first specify the distance tolerance, as a percentage of the scene bounding box diagonal, to join all points that are found within that distance of each other. For example, if the tolerance value is 3, all points that are 3 scene units and less from each other are joined.

You can also modify the settings for joining equal points.

Note: We recommend entering a tolerance up to 5% to retain the shape of the model. Processing stops at the tolerance level that exceeds the length of the bounding box diagonal.

Procedure

To join equal points:

1. Open a 3D file (on page 39).
2. Click the Join Equal Points down arrow on the CADTools toolbar.
3. Click **Settings**.
4. Make your selections as required and click **OK**.
5. Click **Join Equal Points** .

All points within the specified distance are joined.

Copyright © Right Hemisphere 2007. All Rights Reserved.

Join Equal Point Settings

CADTools toolbar > Join Equal Point > Settings

You can modify the settings for joining equal points within models.

Procedure

To modify the join equal points settings:

1. Click the Join Equal Points down arrow on the CADTools toolbar.
2. Click **Settings**.
3. Make your selections as required and click **OK**.

Interface

Tolerance—Determines the maximum distance under which all points are joined. The percentage values are expressed as a percentage of the size of the object's bounding box diagonal. The unit values are expressed as unit size based on those used by the model. These values are directly related to the position of the slider. For example, dragging the slider halfway between 0% and 5% displays approximately 2.5%.

- **Units**—Used to enter the unit values below which all objects are joined. These values are expressed as unit size based on those used by the model, and are directly related to the position of the slider.
- **Percent**—Used to enter the percentage values below which all objects are joined. These values are expressed as a percentage of the size of the object's bounding box diagonal, and are directly related to the position of the slider.

Scene Bounding Box—Displays the bounding box diagonal.

OK—Closes the dialog and saves the settings.

Cancel—Closes the dialog. Any changes made to the settings are lost.

Defaults—Restores the default settings.

Help—Opens the relevant Help topic.

Copyright © Right Hemisphere 2007. All Rights Reserved.

Reducing Models

CADTools toolbar > Reduce Model

Many 3D meshes are designed for specific purposes, but need to be used in ways for which they were not originally intended. For example, a character model may have a high polygon count, and is not be suitable for a game or an online application. The Reduce Model tool can be used to reduce the polygon count of entire models or separate objects, while preserving the defining visual features.

Note: It also automatically removes degenerate triangles. That is, triangles that have two or three identical vertices.

Reducing polygonal models to a smaller number of polygons ensures that file sizes are kept small, and that less bandwidth is required for transmission. You can adjust the reduction settings on many models for improved results.

When using the reduction tool, the current model is examined and if certain components exist in the model, the appropriate reduction options are automatically selected. You can choose whether to keep these settings or modify them to your own requirements. You then process the model, select the amount of reduction you require, and apply the reduction to the model.

More memory may be required if polygon reductions take time to complete. For example, if there are many parts in a model.

Note that this function cannot be reversed.

See also Hints and Tips (on page 440).

Procedure

To reduce the number of polygons in a model:

1. Open a 3D file (on page 39).
2. Click **Reduce Model**  on the CADTools toolbar.
3. Click **Settings** and modify the settings (on page 126) as required.
4. Select the objects on which you want to reduce polygons.
5. Click **Process**. The polygon reduction is performed.
6. Select the amount of reduction (on page 124) you require. The viewport display reflects your selection.
7. Do one of the following:
   - Click **OK** to apply the reduction to the selected objects.
   - Click **Cancel** to cancel the reduction.

The objects' polygons are reduced.

Copyright © Right Hemisphere 2007. All Rights Reserved.

Reduce Model Dialog

CADTools toolbar > Reduce Model
CADTools toolbar > Reduce Model > Process

After a reduction is processed, you can select differing reduction amounts until the optimum reduction is reached. You then apply the reduction to the selected objects. As a guide, most models can be easily reduced to a level of 20% without any leaving any visible artifacts.

There are three methods for selecting the amount of reduction:

- Using the Real-time Reduction slider.
- Entering percentage values in the Remove %, Keep %, and Keep Triangles fields.
- Using the 10%-100% buttons.

The dialog buttons differ depending on whether you have already established the reduction settings and processed the reduction.

Note: Every time you select an amount, the reduction is reflected in the model immediately.

Procedure

To open the Reduce Model dialog:

Click **Reduce Model**  on the CADTools toolbar.

Interface

Real-Time Reduction—Used to select the amount (percentage) of polygon reduction to apply to the model in one of three ways:

- **Slider**—Determines the percentage of polygons to keep. With the slider positioned to the left, no polygon are kept, and with the slider positioned to the right, all polygons are kept. The Remove%, Keep%, and Keep Triangles fields are automatically updated as the slider moves.
- **Remove %**—The percentage of polygons to remove. The slider and the Keep%, and Keep Triangles fields are automatically updated.
- **Keep %**—The percentage of polygons to keep. The slider and the Remove%, and Keep Triangles fields are automatically updated.
- **Keep Triangles**—The number of polygons to keep. The slider and the Remove %, and Keep% fields are automatically updated.
- **10%-100% buttons**—Specifies the percentage of polygons to keep. The slider and the Remove%, Keep%, and Keep Triangles fields are automatically updated.

Statistics—Displays the number of meshes that are selected for reduction.

Progress bar—Displays the name and progress of each of the reduction process operations.

Process—Prepares the model for reduction by applying the Reduce Model settings and processing the reduction. Once the processing is complete the Real-time Reduction tools are able to be used.

Note: Once the reduction is processed, you must click Cancel > Settings if you want to modify the settings again.

OK—Applies the process, closes the dialog, and saves the settings.

Settings—Used to open the Reduce Model Setting dialog to modify the reduction settings.

Copyright © Right Hemisphere 2007. All Rights Reserved.

Cancel—Cancels the current process and closes the dialog, or if you have already performed the reduction, closes the dialog.

Help—Opens the relevant Help topic.

Reduce Model Settings

CADTools toolbar > Reduce Model > Settings

Objects selected for reduction are examined by the reduction tool, and if certain components exist, the appropriate reduction options are automatically selected.

For example, if a model contains a texture map, the UV influence option is automatically selected. When the selected objects are reduced, the mapping coordinate boundaries are preserved and the texture map continues to display correctly. The examples below show a model reduced to 20% without and without UV influence. Note that the texture map is displayed correctly with the UV influence used in the reduction.

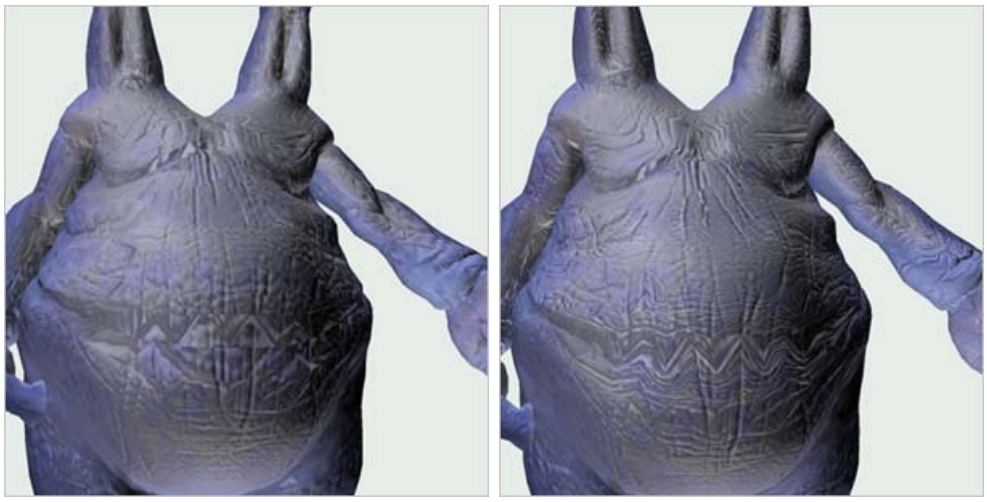

No UV influence / UV influence 0.015

You can modify these settings for the best results when reducing a model. That is, you can remove any discontinuity from reduced models, and dictate to what extent various components of the model are used in the reduction.

Note: if you choose not to use component influences during a reduction, Deep Exploration will attempt to copy any unused components from the original model, but they may not be preserved correctly.

If you have healed a model (on page 127), you can lessen the reduction processing time by clearing the Prepare Options check boxes, as these tasks are performed during the healing process. Clearing these options significantly reduces the processing time for large models.

Procedure

To modify the reduction settings:

1. Click **Settings** in the Reduce Model dialog.
2. Modify settings as required.
3. Click **OK** to save the settings and return to Reduce Model dialog.

Note: You can click the Back button to return to Reduce Model dialog without saving your settings.

You can now process the reduction, select a reduction amount, and apply it to the selected objects.

Copyright © Right Hemisphere 2007. All Rights Reserved.

Interface

Common Options—Used to establish mesh settings.

- **Enable suffix**—Appends the suffix displayed in the text field and the percentage of reduction to the mesh name. This is helpful in identifying models with reduced polygon counts. For example, if you enter 'reduced by' in the suffix field, it is appended to the mesh as 'reduced by xx%' where 'xx' is the percentage reduction.
- **Skip hidden meshes**—Processes visible meshes only.
- **Create new meshes**—Creates new polygon reduced meshes and hides existing meshes. The newly created meshes are displayed in the Scene tree. If you selected the Enable suffix field, the suffix is appended to the mesh names.

  Note: The existing meshes are overwritten with the reduced polygon mesh if this option is not selected.

- **Normalize meshes**—Scales small mesh objects to reduce the display of geometric artifacts and minimize floating point errors. This is helpful when a model is very small or very large, or when the polygon reduction process is slow.

Prepare Options—Used to join vertices, normals, UV, and colors to prevent discontinuity. These options preserve edges and increase the display quality of models.

- **Join vertices**—Merges vertices, if they are contained in the model, based on the distance between them. This prevents 'cracks' and 'holes' if points that are different are close to each other and the polygon count is low. Increasing this value decreases any cracks or holes in reduced models. This option works equally well on large and small models.
- **Join normals**—Merges normals based on their angle, if they are contained in the model.
- **Join UV**— Merges UVs based on the distance between them, if they are contained in the model.
- **Join colors**—Merges colors if they are contained in the model.

Reduce Options—Used to define to what extent the model's components are taken into account during the reduction process. Increasing these values minimizes errors by applying a lesser reduction.

- **Normals influence**—Uses normals to influence the reduction, if they are contained in the model, based on the specified value.
- **UV influence**—Uses UVs to influence the reduction, if they are contained in the model, based on the specified value. For example, a model may have UVs, but if there is no texture on the model the UVs are not needed. Therefore, you can disable the UV influence for a higher quality reduction.
- **Material influence**—Uses materials to influence the reduction, if they are contained in the model, based on the specified value.
- **Colors influence**—Uses colors to influence the reduction, if they are contained in the model, based on the specified value.

OK—Saves the current settings.

Cancel—Cancels the process and closes the dialog. Any changes made to the settings are lost.

Defaults—Restores the default settings.

Help—Opens the relevant Help topic.

Copyright © Right Hemisphere 2007. All Rights Reserved.

Healing Models

CADTools toolbar > Heal Model

The Healing tool is used to repair models that contain disjointed faces, cracks, overlapping geometry, and duplicated edges. These features are displayed as extra lines or gaps when viewing or rendering models as illustrations.

Note: Models that require healing are often a result of poor tessellation.

The healing process welds disjointed faces together to create a single object. Additionally, it mends cracks between poorly joined sections, overlapping geometry, and duplicated edges.

For example, the model of a fishing reel displays additional lines; this illustrates objects containing disjointed faces. Once the model has been healed, the disjointed faces disappear from view.

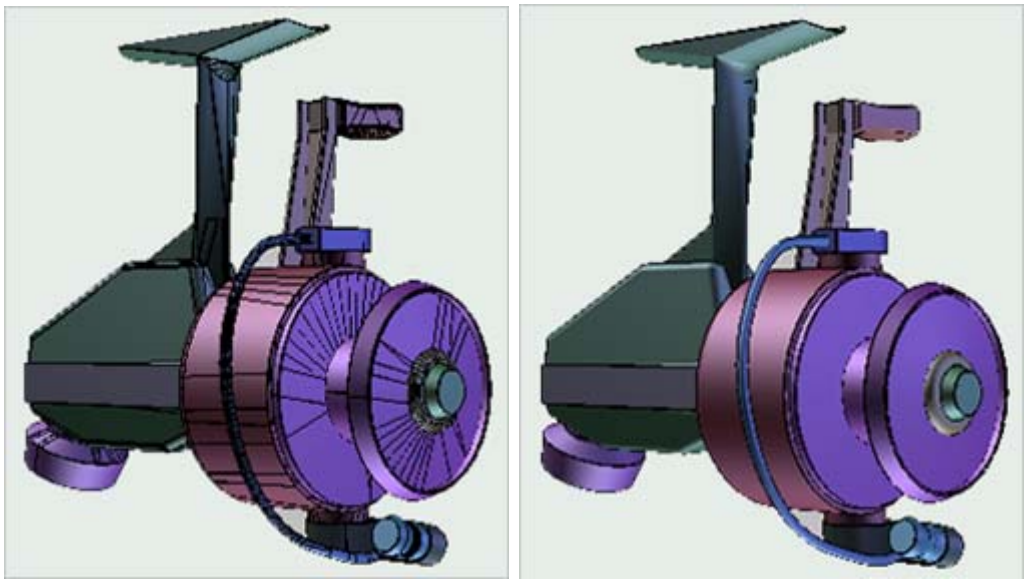

Model with disconnected faces / Model with connect faces after healing

We recommend that the Healing tool is used before the Reduce Model or Unify Normals tools as it repairs the model and improves the quality of the resulting model.

Note: Healing very large models may slow down the process.

Procedure

To heal a model:

1. Open a 3D file (on page 39).
2. Click **Heal Model**  on the CADTools toolbar.
3. Click **Settings** and modify the settings (on page 129) as required.
4. Select the objects that you want to heal.
5. Click **Process**.

The objects are healed.

Copyright © Right Hemisphere 2007. All Rights Reserved.

Heal Model Dialog

CADTools toolbar > Heal Model
CADTools toolbar > Heal Model > Process

The Heal Model dialog displays the status of the healing process and statistics about the model.

Interface

Statistics—Displays the number of meshes to be healed.

Progress bar—Displays the name and progress of the healing process.

Process—Processes and applies healing to the selected objects.

Settings—Used to open the Heal Model Setting dialog to modify the healing settings.

Cancel—Cancels the current process and closes the dialog, or if you have already performed the healing, closes the dialog.

Help—Opens the relevant Help topic.

Heal Model Settings

CADTools toolbar > Heal model > Settings

You can modify these settings for the best results on specific models. That is, you can dictate to what extent various components of the model are used in healing.

Procedure

To modify the healing settings:

1. Click **Settings** in the Heal Model dialog.
2. Modify the settings as required.
3. Click **OK** to save the settings and return to the Heal Model dialog.

   Note: You can click the Cancel button to return to the Heal Model dialog without saving your settings.

You can now perform healing and apply it to the selected objects.

Interface

Meshes—Used to establish mesh settings.

- **Skip hidden meshes**—Processes visible objects only.
- **Combine faces to object**—Combines several objects, in the lowest branch of the scene tree, together to create one object. For example, one object has been imported as many parts. The healed objects have the suffix, _healed, appended to the text field.

  Note: If the model contains multiple objects with their own animations, the animations are combined into a single object and are not retained. This may adversely affect the resulting animation.

- **Create new meshes**—Creates new healed objects. The newly created objects reflect the structure of the existing objects and are displayed in the Scene tree.

Healing Tolerances—Used to establish healing threshold settings. These values are displayed in percent and in units.

Copyright © Right Hemisphere 2007. All Rights Reserved.

- **Vertices**—Determines the maximum distance allowed between two vertices. Values under this threshold will result in the two vertices being joined. The percentage values are expressed as a percentage of the size of the object's bounding box diagonal. The unit values are expressed as unit size based on those used by the model.
- **Edges**—Determines the maximum distance allowed between a vertex and edge. If the distance is less than the threshold value then the vertex is collapsed into the edge. The percentage values are expressed as a percentage of the size of the object's bounding box diagonal. The unit values are expressed as unit size based on those used by the model.

OK—Applies the settings and returns to the Heal Model dialog.

Cancel—Cancels the process and closes the dialog. Any changes made to the settings are lost.

Defaults—Restores the default settings.

Help—Opens the relevant Help topic.

Converting to Double-Sided

CADTools toolbar > Convert to Double-Sided
Right-click 3D viewport > Tools > Convert to Double-Sided

Polygons are usually only rendered from one direction; the direction defined by their surface normals. Because of this many models, especially CAD models that contain ribbon or strip-type geometry, may display invisible polygons when they are rotated. That is, they may not display an opposing surface.

Converting polygons to double-sided, duplicates an object’s polygons to display the same surface on the front and back faces of the object.

Note that this function doubles the number of polygons and, after you save a model that has been converted to double-sided, you cannot retrieve the original polygon information. As such, it may be more efficient to apply back-facing geometry to a material, or use CTRL+H to turn 'on' the back faces.

Procedure

To convert objects to double-sided:

1. Open a 3D file (on page 39).
2. Select the objects for which you want to convert.
3. Click **Convert to Double-Sided** .

The objects' polygons are converted.

Copyright © Right Hemisphere 2007. All Rights Reserved.

Exploding Objects

CADTools toolbar > Explode Objects

CAD operators typically design an assembly in a static assembled mode. However, illustrators often require an exploded view of the model and its parts. Exploding models clearly displays assemblies in a traditional illustration style.

The Explode Objects tool is useful for generating 2D illustrations and dynamic 3D documents. Animated explosions can also be created for electronic display, which can be useful for displaying relationships between parts and, when manually sequenced can represent actual assembly and disassembly instructions. You can also modify the settings for exploding objects.

To explode objects, you must first specify a number of settings (on page 132). After the explosion is created, an 'Explode' sequence (on page 110) is created, and the animation controls (on page 314) can then be used to view the animation. Each subsequent exploded animation that is created overwrites the existing Explode sequence and animation. However, creating an exploded animated without stages does not overwrite an existing exploded animation that was created with stages.

Note: Sub-assemblies are not recognized if they are a group of parts of differing shapes when exploding objects.

See also Hints and Tips (on page 440).

Procedures

To explode objects:

1. Open a 3D file (on page 39).
2. Click the Exploded Objects down arrow and click **Settings**.
3. Make your selections as required and click **OK**.
4. Click **Explode Objects** .

The objects are exploded.

To create an animated explosion:

1. Open a 3D file.
2. Click the Exploded Objects down arrow and click **Settings**.
3. Select the 'Create animation' check box.
4. Make your selections as required and click **OK**.
5. Click **Explode Objects** .

The animation is exploded and the 'Explode' sequence is created.

To delete an exploded animation:

1. Open the file from which you want to delete a sequence.
2. Open the Animation Options dialog (on page 315) and select the 'Explode' sequence in the Sequence window.
3. Click **Delete**.

The sequence is removed from the sequence list and the explosion is deleted.

Copyright © Right Hemisphere 2007. All Rights Reserved.

Explode Objects Settings

CADTools toolbar > Explode Objects > Settings

You can modify the settings for exploding objects out from models.

Procedure

To modify the explode objects settings:

1. Click the Explode Objects down arrow and click **Settings**.
2. Make your selections as required and click **OK**.

Interface

Precision—Determines the precision of the calculation in terms of speed versus quality. The quality is measured by the compactness of the resulting exploded elements. For example, if you explode a model at high quality, the parts are exploded, but are tightly grouped.

Direction—Used to determine the direction of the exploded objects.

- **All directions**—Explodes the objects out from every direction.
- **XY plane**—Explodes the objects out from the XY plane.
- **XZ plane**—Explodes the objects out from the XZ plane.
- **YZ plane**—Explodes the objects out from the YZ plane.
- **Constrain to XYZ axes**—Explodes the objects out from the XY and Z axes.
- **Smart axis**—Explodes the objects out from the most correct axis for each object, based on the object's shape. That is, any objects that are found to have equal bounding box dimensions (square) are moved in the direction perpendicular to the square face of the bounding box. This function overrides the plane settings and the path along which the objects are moved may be on a different plane than the one currently selected. For example, a number of 'bolt' objects that have hexagonal heads, also have a square bounding box each, and are therefore moved together along the same axis.

Animation—Used to create an animated explosion and set animation options.

- **Create animation**—Creates an animated explosion.
- **Create animation sequence for each stage**—Creates an animation sequence for each stage of an explosion sequence.
- **Duration**—Determines the duration in seconds of the animation sequence.
- **Stages**—Determines the number of stages for the animation sequence. For example, if there are 90 objects exploded from the model and you select 3 stages, the objects are exploded in groups of 30. If you select 90 stages, the objects are exploded one by one.
- **Order**—Determines the order in which to explode the objects - by distance or size. If you select Distance, objects furthermost from the centre of the model are exploded first, and then objects closer to the model, and so on. If you select Size, the smallest objects are exploded first.
- **Inverse**—inverts the exploded view.

OK—Closes the dialog and saves the settings.

Cancel—Closes the dialog. Any changes made to the settings are lost.

Defaults—Restores the default settings.

Help—Opens the relevant Help topic.

Copyright © Right Hemisphere 2007. All Rights Reserved.

Coloring Objects

CADTools toolbar > Color Objects

The color objects tool is used to apply different colors to adjacent objects. This helps identify objects that may not appear to be separate. For example, a set of connected pipes consists of separate objects, where each of these objects looks similar to it's adjacent object. Coloring the objects different colors, clearly shows the individual objects.

You can also modify the settings for coloring objects.

Note: If there are more objects than colors, the same color is applied to multiple objects.

Procedure

To color objects:

1. Open a 3D file (on page 39).
2. Click the Color Objects down arrow and click **Settings**.
3. Make your selections as required and click **OK**.
4. Click **Color Objects** .

The objects are colored.

Color Objects Settings

CADTools toolbar > Color Objects > Settings

You can modify the settings for coloring objects within models.

Procedure

To modify the color objects settings:

1. Click the Color Objects down arrow and click **Settings**.
2. Make your selections as required and click **OK**.

Interface

Object Colors—Used to establish the colors to apply to objects in the scene.

- **Number of colors**—Determines the number of colors to apply to the objects.
- **Color Selection**—Used to select the colors to apply to the objects.
  - **Color [1 - 10]**—Opens the color selector and is used to select the colors to apply. The colors are ignored for any option that is greater than the number of colors specified in the 'Number of colors' option.
- **Override face color**—Overwrites the objects' existing colors with the new colors.

OK—Closes the dialog and saves the settings.

Cancel—Closes the dialog. Any changes made to the settings are lost.

Help—Opens the relevant Help topic.

Copyright © Right Hemisphere 2007. All Rights Reserved.

Randomize Objects

This option perturbs the surface of the model or object by small, random amounts. However, it keeps the normals correct so the object still looks smooth. This in turn makes precise measurements difficult, which is important if you do not want users to be able to make reliable measurements.

Randomize Object Settings

Interface

Tolerance—Defines the maximum random offset for this operation (shifting all 3D points a random amount).

- **Units**—The number of units defined to randomize the object, this can be changed using the slider bar or by entering a fixed number manually.
- **Percent**—A percentage of the objects size, can only be changed by moving the slider bar.

Scene Bounding Box—This is a 3D box in which the 3D scene is fixed, it gives you an idea how big the current scene is. The measurement is the diagonal in scene measurement units.

Tolerance

- **Use scene units**—If checked uses the scenes measurement units.
- **Use percent of object size**—If checked uses a percentage of the objects size.

OK—Closes the dialog and applies the settings. Any changes made to the settings are saved.

Cancel—Closes the dialog. Any changes made to the settings are lost.

Defaults—Establishes the default setting for the tolerance option. The default is set at 1.000% of the object size (Units - 0.3333).

Help—Opens the relevant Help topic.

Copyright © Right Hemisphere 2007. All Rights Reserved.

Callouts

Parts panel toolbar



Parts Panel Toolbar

Callouts are used to direct attention to, and identify parts of a model. A callout consists of an assigned part identifier and a line pointing to the part. Once drawn, they can be rendered to vector format using the Vector Illustration tool (on page 163).

The Callout Settings dialog is used to establish callout settings including the placement of callouts and the callout color. After callouts are created, they can be transformed (on page 137) using the 3D Editor, edited and deleted (on page 151), and rendered within the scene (on page 137). The Callout Settings dialog (on page 138) can be used to establish callout settings.

A list of parts (objects of the model) with the corresponding callouts can be exported. This is called the Bill of Materials, BOM or BOM list. The BOM includes the part numbers and names and quantities of multiple copies of the same part. Initially the parts are grouped by name showing the number of parts with the same name. However, this can be changed by comparing the parts.

You can select the source that is used to create the callouts and the Bill of Materials (BOM list). The list can be based on the following groups of parts:

- The current geometry of the entire scene.
- The currently selected object (on page 88) nodes.
- An external BOM file.

  Note: External BOM files are named 'xxx.bom.xml by default'.

- The parts contained within any layer (on page 169), whether the layer is referenced by a model view, step, or is simply for grouping.
- The parts contained within the file's steps (on page 194).
- The parts contained within the file's model views (on page 77).

The source settings can be modified using the BOM Settings dialog (on page 143). For example, the BOM list can be exported to an XML file; this list includes the part numbers and names and quantities of multiple copies of the same part.

Callouts can be hidden and shown in the same way as other objects, via the Scene tree and 3D viewport right-click menu.

Callout Rules

Certain rules apply to callouts:

- The Parts panel (on page 356) is used to manage callouts and the BOM list.
- Callouts are markup objects and as such are displayed within the Callout Layer object in the 3D Objects list when they are created, and in the Parts panel.
- Using the 3D Objects list, you can select, hide and show callouts, group and collapse their hierarchies, and delete callouts in the same way as other objects.
- To distinguish callouts in the Callout Layer, for each duplicate part, a letter (a-z) is suffixed to the callout name in the list. For example, Callout-3, Callout-3a etc.
- Callouts are attached to objects, and so, if you create callouts on a model with animation, the callouts are also animated.

Copyright © Right Hemisphere 2007. All Rights Reserved.

- If you use the BOM list to select callouts, the parts to which the callouts belong are also selected.
- Callouts can be moved, rotated, and scaled separately from the model.
- When you rotate, scale, or pan models, the callouts move in relation to the parts while remaining the same size.
- For callouts to be displayed on an image or model, the 'Show Markups' command must be selected from the Display menu.
- The Parts panel displays only the objects that are part of the selected BOM source. For example, if you select a layer as the source, only those parts contained within that layer are used to create the BOM.

Creating and Removing Callouts

Parts panel toolbar > Draw Callouts
Parts panel toolbar > Remove Callouts

Callouts can be created in a number of different ways, for example, the current scene geometry or selected object nodes.



Parts Panel Toolbar

Procedures

To create callouts:

1. **Open a 3D file** (on page 39).
2. Select **Callout Settings**,  from the toolbar and establish the appearance of the callouts.
2. Click **Draw Callouts**  on the Parts panel, the callouts will be displayed.

To remove callouts:

1. Open the file from which you want to remove the callouts.
2. Click **Remove Callouts**  on the Parts panel. All the callouts will be removed.
3. To remove specific callouts, highlight the callout and press **Delete**, or right click the part and select **Delete Objects**.

Copyright © Right Hemisphere 2007. All Rights Reserved.

Exporting the BOM and Callouts

Parts panel toolbar > Export BOM

Callouts are exported when you export the BOM list.

Procedure

To export the BOM list:

1. **Create the callouts** (on page 136).
2. Click **Export BOM**  on the Parts panel.
3. Browse to the required save destination, enter a file name, and select a file type (.xml or .txt).
4. Click **Save**.

The BOM and callouts are saved in either an xml or text file.

Rendering Callouts

Parts panel toolbar > Draw Callouts > Vector Illustration tool

Callouts can be rendered as part of the model using the Vector Illustration tool, in all formats supported by Illustration Mode.

Procedure

To render callouts:

1. Create the callouts (on page 135).
2. Use the Vector Illustration tool (on page 163) to render the illustration to the Binary CGM format.

Copyright © Right Hemisphere 2007. All Rights Reserved.

Selecting Callouts

Viewport > CTRL+click callouts
Scene tree > Callout layer > SHIFT / CTRL+click callout names
Parts panel > CTRL+click callout names

After callouts are created, you can select them and their corresponding parts in a number of different ways: via the BOM list, the viewport, the Scene tree, and the Parts panel.

Selecting individual callouts via the BOM list is helpful if you want to see the parts and their corresponding callouts together; selecting multiple callouts via the viewport, Scene tree, or Parts panel is helpful if you want to hide or move individual callouts.

After selecting callouts, they can be exported, hidden, moved, and rendered.

Procedure

To select callouts, do one of the following:

- Click a callout in the viewport, hold down the CTRL key and click the non-adjacent callouts you want to select. The callout names are selected in the Callout Layer.

Note: If you select only one callout in the viewport, the callout name is selected in the Callout Layer and in the BOM list.

- Click a callout name in the Callout Layer of the Scene tree, hold down the SHIFT key and click the adjacent callout for the range you want to select, or hold down the CTRL key and click the non-adjacent callouts you want to select. The callouts are selected in the viewport.
- Click a callout name in the Parts panel, hold down the CTRL key and click the non-adjacent callouts you want to select. The callouts are selected in the viewport.
- Select a callout in the Parts panel click the checkbox. When a tick is displayed, the callout will be displayed in the viewport window. If the checkbox is unchecked, the callout will not be displayed.

Selecting callouts can also be carried out using the **Select Callout** icon. By default this toggle is set to **Select only callout,** . To select the callout **and** object click this button once, the icon changes to , **Select callout and object**, you can now select a callout, the associated object will also be highlighted.

Tip: If you are in doubt, hover over the icon to see what is selected.

Callout Settings Dialog

Parts panel toolbar > Callout Settings

The Callout Settings dialog is used to establish callout settings including the placement of callouts and the callout color.

You can also edit individual callout markups (on page 151) using the Edit Markup dialog.

Procedures

To open the Callout Settings dialog:

Click **Callout Settings**  on the Parts panel.

Copyright © Right Hemisphere 2007. All Rights Reserved.

To modify the callout settings:

1. Open the Callout Settings dialog.
2. Make the selections you require.
3. Click **OK**.

Interface

Label—Used to select the way in which labels are generated and the label style.

- **Part ID**—Creates callouts using the part ID.
- **Part name**—Creates callouts using the part name.
- **Font**—Opens the Font dialog and is used to set the markup font type, style, and size.

Style—Used to define the style in which the callouts are displayed.

- **Rectangle**—Displays each callout in a rectangular style.
- **Oval**—Displays each callout in an oval style.
- **Text only**—Displays each callout as text only.
- **Outline text**—Displays each callout as text with an outline.
- **Halo**—Used to draw polylines on top of a thicker solid line using the background color. This means that as the line width changes, the halo scales accordingly. The halo value is a numeric value.
  - **Width**—The width of the halo in points, maximum 10 points.
- **Always on top**—Draws the callouts on top of all the objects in the scene.

Appearance—Used to define the type of leader head to display on the callouts:

- **No leader head**—Displays a plain leader with no head.
- **Point leader head**—Displays a point leader head.
- **Arrow leader head**—Displays an arrow leader head.
- **Invisible line**—Displays no leader head.

Linestyle—Used to define the material for the line style.

- **Edit**—Allows you to edit the characteristics and line styles.

Color—Used to select the color in which to display the callouts.

- **Line**—Opens the color selector and is used to select the color of the callouts' lines.
- **Text**—Opens the color selector and is used to select the color of the callouts' text.
- **Background**—Opens the color selector and is used to select the color of the callouts' background.

Callout Placement

Circular—Creates the callouts in a circular pattern around the object or node.

Object perimeter—Creates the callouts around the object perimeter.

Rectangular—Creates the callouts in a rectangular pattern, in any combination of the positions top, bottom, left or right.

Near object—Positions the callout close to the associated object in any combination of the four positions:

- **Top, Bottom, Left, Right**

Distance—The distance for the callout from the object (only selectable if Rectangular is checked):

Copyright © Right Hemisphere 2007. All Rights Reserved.

- **Diameter**—Displays the callout a specified distance from the object using a multiplication factor, e.g. 2.0 will generate the callouts a distance of twice the diameter of the object or node.
- **Smart**—Automatically generate callouts in the optimum position in relation to the object or node.

Combine for same part—Produces a single callout with leaderlines to each like part.

Draw one for same part—Create only one callout and leaderline for duplicate parts or nodes.

Draw for invisible objects—Create callouts for invisible parts or nodes.

Point to mesh edge—Position the callout leaderline on the edge of the mesh.

Interactive draw in—Re-draws the callouts after the model has been moved. This parameter defines the number of steps required to redraw the callouts.

Draw Callouts—Creates the callouts for the selected model.

OK—Closes the dialog and saves the settings.

Cancel—Closes the dialog. Any changes made to the settings are lost.

Help—Opens the relevant Help topic.

Action

Parts panel toolbar > Action

The Action dialog is used to establish the following:

- **BOM settings** (on page 143)—Defines the import and export options, naming convention and node comparison criteria.
- **Autonaming**—If this option is set, it automatically renumbers the items in the BOM if they are manually moved.

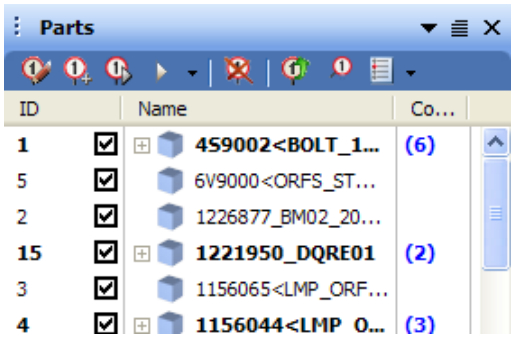

Autonaming not selected

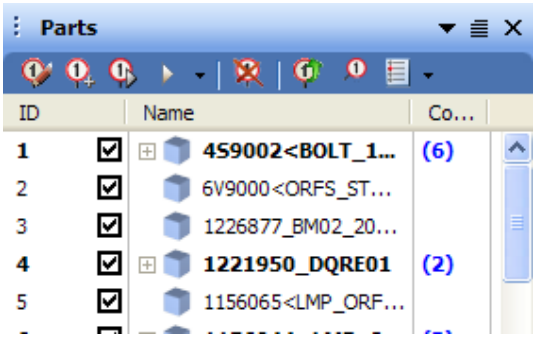

Autonaming selected

- **Renumber parts** (on page 142)—Renumbers the parts in the parts list if Autonaming is not set.

Copyright © Right Hemisphere 2007. All Rights Reserved.

- **Metadata columns**—Only available when at least one of the objects has metadata, select the columns you require and they will be added to the BOM:

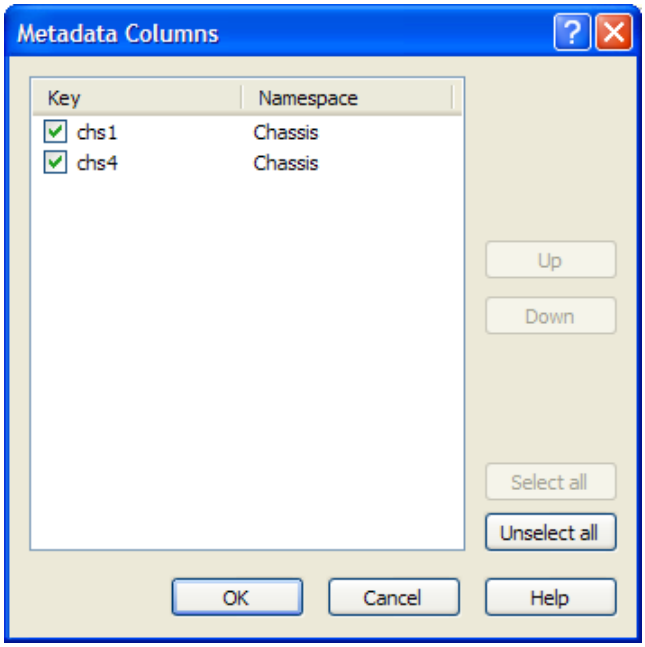

Metadata Columns Dialog

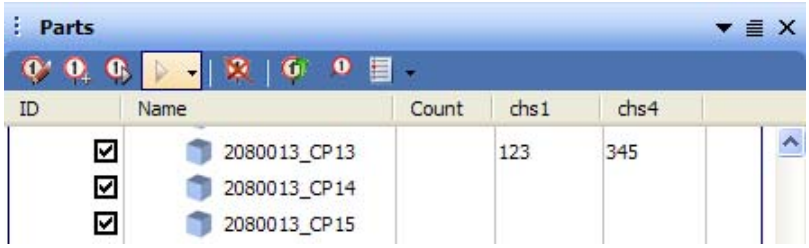

Metadata Columns Added

- **Add selected nodes**—Adds selected nodes to the BOM.
- **Remove selected nodes**—Removes selected nodes from the BOM.
- **Order parts by screen position**—Produces the parts list based on the screen position of the callouts, from the top of the screen down.
- **Synchronize part visibility**—When you click this item, tickboxes next to the ID numbers are removed from objects which are currently invisible onscreen and set for objects which are visible onscreen.
- **Vectorize callouts** (on page 142)—Converts billboard style callouts to the vectorized equivalent.

Metadata Columns

The Metadata Columns option is only available when at least one of the objects has metadata, select the columns you require and they will be added to the BOM:

Up—Highlight the part and use the **Up** button to move the part to a different display position. The order of the objects in the metadata columns list, determines the display position on the parts list, i.e the metadata columns will be displayed left to right on the parts list, matching their position in the metadata columns list (top to bottom).

Down—Using this option will move the selected part down the metadata column list.

Select all—Using this option selects all metadata columns to be displayed in the parts list.

Copyright © Right Hemisphere 2007. All Rights Reserved.

Unselect all—Using this option unchecks all objects so that no metadata columns will be displayed in the parts list.

OK—Closes the dialog and saves the settings.

Cancel—Closes the dialog. Any changes made to the settings are lost.

Help—Opens the relevant Help topic.

Renumber Parts

Procedures

To renumber the parts list:

1. Move individual parts as required (drag and drop), the part number will move with the object.
2. Click **Action** .
3. From the drop down menu select **Renumber parts**.
4. The parts list will be renumbered.

Vectorize Callouts

Parts Panel toolbar > Action > Vectorize Callouts

Converts billboard style callouts to the vectorized equivalent, creating a separate object for each callout. This option enables the use of callouts in file formats that do not support the billboard callout method, e.g. U3D.

Procedures

To open the Vectorize Callouts dialog:

From the **Action** icon , on the Parts panel, select **Vectorize Callouts**.

To modify the callout settings:

1. Make the selections you require.
2. Click **OK**.

Interface

Vector callouts one item—Used to create an outline callout font with a transparent background with the callout and leaderline as one object.

Vector callouts two items—Used to create an outline callout font with a transparent background with the callout and leaderline as two separate objects.

Raster callouts text both sides—Used to create a flat callout with two meshes so that the callout numbers read correctly from the front and from the back, when rotated, with the callout and leaderline as two separate objects.

Copyright © Right Hemisphere 2007. All Rights Reserved.

Raster callouts text one side—Used to create a flat callout with a single mesh so that the callout numbers read correctly from the front only, with the callout and leaderline as two separate objects.

Vectorize steps—A batch process that vectorizes callouts across all step views, using one of the options above.

OK—Closes the dialog and saves the settings.

Cancel—Closes the dialog. Any changes made to the settings are lost.

Help—Opens the relevant Help topic.

BOM Source

Parts panel toolbar > BOM Source

The BOM menu option is used to establish a Bill of Materials (BOM) for a group of nodes.

Procedure

To add nodes to a BOM:

1. Highlight the parts required for the BOM.
2. Click **BOM Source** .
3. Choose **Currently Selected Nodes**.
4. The selected nodes will be added to the BOM, the Parts List will be updated and the BOM Source list will be displayed.

Interface

Currently Selected Nodes—Adds the currently selected nodes to the BOM.

Parts Layer—Toggles the display back to the Parts List.

Selection #(x)—Shows a list of the previously created BOM's (if they exist).

Copyright © Right Hemisphere 2007. All Rights Reserved.

BOM Settings

Parts Panel toolbar > Action > BOM settings

This dialog defines the import and export options, naming conventions and node comparison criteria.

Interface

Compare Nodes

- **Compare Names**—Groups like parts or nodes.
  - **Skip characters from right**—Compare parts or nodes by skipping a number of characters from the right, maximum 20 characters.
  - **Include suffix (numbers only)**—Includes the numeric suffix only.
- **Compare Geometry**—Compares and groups objects or nodes that are using the same geometry.
  - **Exact**—Compares and groups objects or nodes that have an exact geometric match.

Naming Convention—Enter the name for the part ID after the # sign, this name will then be added to the part number, e.g. **#-piston-cast**, where # will be the automatically generated part number.

- **First number**—The **start** number for the BOM parts list.

BOM File Import

- **Automatically load .bom.xml files**—Automatically load .bom.xml files from the location defined by the Browse option.
  - **Browse**—Used to browse to the location where the .bom.xml files are saved.
  - **Clear**—Used to clear the BOM filename field.
- **Create dummy nodes if part is missing**—Creates dummy, bounding box, nodes if parts are missing or have been deleted.

Note: Dummy nodes are only created for XML files saved with "Expand node" options set to ON. If the XML file has been saved with the "Transformation matrix" option set to ON, then the dummy node is created with the matrix specified in XML. If "Transformation matrix" is set to OFF, the dummy is created at scene origin (0,0,0).

BOM File Export

- **Number of nodes in part**—Adds the number of nodes (count) in a part to the file, i.e.

```
<?xml version="1.0" encoding="utf-8" ?>
- <Parts>
    <Part id="1" name="B" count="5" />
    <Part id="2" name="Conn_Rod_" count="7" />
    <Part id="3" name="Dowel" count="2" />
    <Part id="4" name="L" count="2" />
    <Part id="5" name="Oil_Ring" count="3" />
    <Part id="6" name="P" count="23" />
    <Part id="7" name="Spacers" count="1" />
    <Part id="8" name="Upper_conn_Rod" count="1" />
  </Parts>
```

Copyright © Right Hemisphere 2007. All Rights Reserved.

- **Expand node**—Shows all the individual nodes for each part:

```
<?xml version="1.0" encoding="utf-8" ?>
- <Parts>
  - <Part id="1" name="B" count="5">
      <Node name="Big_End_Bearing" />
      <Node name="Big_End_Bearing" />
      <Node name="Big_End_Bearing" />
      <Node name="Big_End_Bearing" />
      <Node name="Bearing" />
    </Part>
  - <Part id="2" name="Conn_Rod_" count="7">
      <Node name="Conn_Rod_nut" />
      <Node name="Conn_Rod_nut" />
      <Node name="Conn_Rod_bolt" />
      <Node name="Conn_Rod_bolt" />
      <Node name="Conn_Rod_Lower_assy" />
      <Node name="Conn_Rod_Upper_Assy" />
      <Node name="Conn_Rod_assy" />
    </Part>
  - <Part id="3" name="Dowel" count="2">
      <Node name="Dowel" />
      <Node name="Dowel" />
```

- **Transformation matrix**—Selectable only if **Expand node** has been checked. Shows all the Rotate and Translate coordinates for each node in the parts list:

```
<?xml version="1.0" encoding="utf-8" ?>
- <Parts>
  - <Part id="1" name="B" count="5">
    - <Node name="Big_End_Bearing">
        <Rotate x="-66.8566" y="-1.92228e-014" z="-1.2556e-014" />
        <Translate x="-54.1376" y="-68.0731" z="-88.5293" />
      </Node>
    - <Node name="Big_End_Bearing">
        <Rotate x="-66.8566" y="-1.92228e-014" z="-1.2556e-014" />
        <Translate x="-38.1376" y="-69.3597" z="-78.8188" />
      </Node>
    - <Node name="Big_End_Bearing">
        <Rotate x="66.8566" y="-2.10494e-014" z="180" />
        <Translate x="-54.1376" y="-70.6463" z="-69.1084" />
      </Node>
    - <Node name="Big_End_Bearing">
        <Rotate x="66.8566" y="-2.10494e-014" z="180" />
        <Translate x="-70.1376" y="-69.3597" z="-78.8188" />
      </Node>
    - <Node name="Bearing">
        <Rotate x="-2.28917e-014" y="23.1434" z="-90" />
        <Translate x="-70.1376" y="-129.106" z="60.9613" />
      </Node>
```

OK—Closes the dialog and saves the settings.

Cancel—Closes the dialog. Any changes made to the settings are lost.

Help—Opens the relevant Help topic.

Copyright © Right Hemisphere 2007. All Rights Reserved.

Manual Callouts

Parts Panel toolbar > Manual Callouts

This tool enables you to manually create callouts, and a BOM, on a new layer with the name User list #1, User list #2, etc..

Procedures

To activate this option:

1. Click **Manual Callouts** , on the Parts toolbar.

   Note that the Select/Pull Apart/Move/Rotate/Scale modes are switched off until you finish with the manual callouts tool.
2. A new, empty, layer is created, each time the **Manual Callouts** button is pressed, using the syntax **User list #**, e.g. User list #1, User list #2, etc..
3. Click any object in the viewport window and drag the leaderline (hold down the left mouse button) to the desired callout location, then release the button.
4. A new callout is created and placed at the origin of the mouse click, and the object that you clicked is added to the BOM.

   Note: If you click on a object which already has callout, that callout is replaced with a new one, and is attached to the new location.
6. If you want to use an existing layer and not create a new one, hold down the **Shift** key when you click **Manual Callouts**, . You can edit the currently selected layer, but no new layer is created.

To add the object to the BOM without creating a callout:

1. Shift + click the selected object, the object is added to the BOM, but no callout is created.

   Note: It is possible to create a callout at a later date.

To move a callout after it is created:

1. Highlight or point at the callout, then left click and drag the callout to its new position.

Copyright © Right Hemisphere 2007. All Rights Reserved.

Cutting and Cross-Sectioning

Menu bar > View > Controls and Toolbars > Cutting Toolbar

Half or quarter cross-sections can be created in Deep Exploration. This enables you to view the internal parts and assembly processes more efficiently, identify any intersection conflicts within the assembly or the assembly configurations, and see any section views more clearly and accurately.

For example, if an assembly includes a tube positioned within another tube, you may not be able to see whether the inner tube fits exactly, or if it overlaps the outer tube. To identify the overlap, you can remove a section of the assembly to see the inner parts.

To create a cross-section, you must first set the area to be removed from the assembly by applying a 'clipping box'. This area can be a half or quarter section of the assembly and is determined by your cutting and cross-section settings (on page 149).

Note: Halved cross-sections are created through the entire length of the assembly.

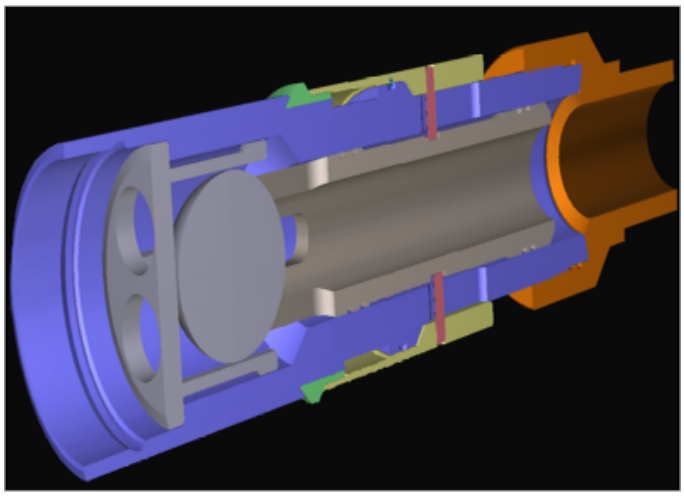

Halved Cross-Section

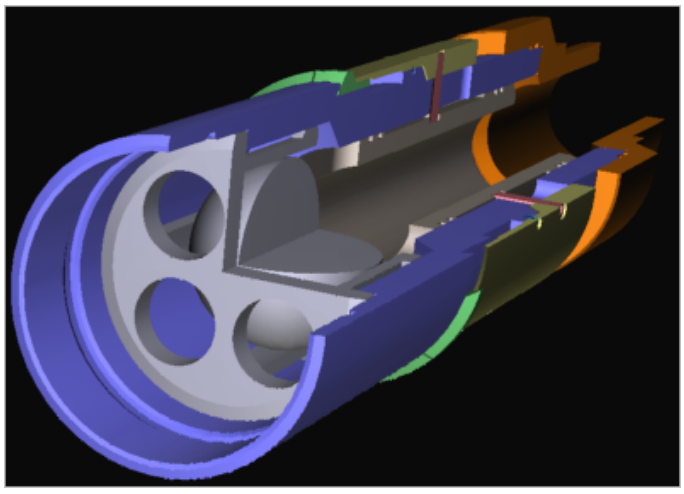

Quartered Cross-Section

Clipping boxes are displayed in transparent red and grey by default. Once a clipping box is applied, you can remove the clipping box area from the assembly. The color red indicates where the cut will occur.

Copyright © Right Hemisphere 2007. All Rights Reserved.

Procedure

To create a cross-section:

1. Open a 3D file (on page 39).
2. Click **Settings**  on the Cutting toolbar.
3. Establish your cutting and cross-section settings (on page 149) as required.
4. Click the required **Clipping Box** button. For example, **Bottom half**  The clipping box is displayed in the viewport relative to your cross-section settings.
5. Click **Cut by Clipping Box** . The area within the clipping box is removed.

Note: The clipping box may be moved using the 3D editing tools in the same way as other objects.

Using the Cross-Sectioning plane

Cross section planes let you exclude some of a scene's geometry to view or render only certain portions of the scene.

The plane can be moved (on page 93) to 'slice' though a 3D model along the cross section plane's x, y, and z axes and also by rotating the plane. The cross-section plane can be moved by hovering over the edges of the plane, when the cursor changes to a circular arrow, , the plane can be repositioned.

Holding down the shift key and left mouse button, while hovering over the cutting plane, allows you to re-orient the cross-section plane by pointing at faces on the model (through the plane).

Note: If you move the cross-section plane, its original position can be restored by selecting **Cross Section**  on the Cutting toolbar, then selecting **Reset** .

You can also view and modify the cross section plane properties, including the plane's color and opacity.

Procedures

To create a cross section plane:

1. Click **Cross Section**  on the Cutting toolbar.
2. Click the down arrow to select an initial cross section plane to work with.

To change the default settings for the cross section plane:

1. Click **Settings**  on the Cutting toolbar.
2. Make your selections as required and click **OK**.

Interface

 **X**—Cross section on the x axis.

Copyright © Right Hemisphere 2007. All Rights Reserved.

Y—Cross section on the y axis.

Z—Cross section on the z axis.

Flip—Flip the cross section plane to show the opposing cross section.

Reset—Return to the original position

Making a Cross Section

The whole model can be clipped or cross-sectioned using these options. These can also be applied to individual objects in the scene.

Procedures

To cut using the cross-section plane:

1. Click **Cross Section** on the Cutting toolbar.
2. Click the down arrow to select a cross section plane to work with.
3. Click **Cut by Cross Section Pane** on the Cutting toolbar.

To cross-section using the cross-section plane:

1. Click **Cross Section** on the Cutting toolbar.
2. Click the down arrow to select a cross section plane to work with.
3. Click **Cross Section using Cross Section Pane** on the Cutting toolbar.

A 2D vector image will be created at the cross section plane. This is the cross-section.

Cutting and Cross Section Settings

Select > Cutting toolbar > Settings

Using the Cutting and Cross Section Settings dialog, you can modify the default settings for cutting and cross-sectioning. The settings are saved to your computer registry (on page 30) for future use.

Procedure

To open the Cutting and Cross Section dialog:

Click **Settings** on the Cutting toolbar.

Copyright © Right Hemisphere 2007. All Rights Reserved.

Cutting Tab

Select > Cutting toolbar > Settings > Cutting tab

The Cutting tab enables you to modify a number of default settings for cutting.

Interface

Override material—The default capping color is red with the default outline color defined in **Tools > Options > Color**, change these colors using the drop down material or select your own material for capping and outline.

- **Edit** (on page 354)—Allows you to edit the characteristics and line styles.

Cutting—Used to define settings for cutting.

- **Multiple cap**—Used to cap the clipped portion of the model with separate objects for each capped object. They will appear as separate objects in the scene tree window.
- **Collect caps into one object**—Used to group clipped objects into a single object in the scene tree using the name entered in the **New name** field.

Cross-sectioning—Used to define settings for cross-sectioning.

- **Hide original object**—Hides the original object after the model has been cross-sectioned with the **Cross section using clipping pane** option.

New Name—Enter a name for the remaining group of objects, after cross-sectioning, the name will appear as a new object in the scene tree window.

OK—Closes the dialog and applies the settings. Any changes made to the settings are saved.

Cancel—Cancels the process and closes the dialog. Any changes made to the settings are lost.

Help—Opens the relevant Help topic.

Cross Section Tab

Select > Cutting toolbar > Settings > Cross Sections tab

The Cross Sections tab enables you to modify various properties of the cross section plane object.

Interface

Create caps—Creates caps or not.

Cross section outline width—Used to set the width for the outline of the cross section plane.

Cross section outline—Used to open the color selector and select a color in which to display the outline of the cross section plane.

Cross section plane—Used to open the color selector and select a color in which to display the cross section plane.

Cross section plane opacity—Determines the opacity of the cross section plane.

OK—Closes the dialog and applies the settings. Any changes made to the settings are saved.

Cancel—Cancels the process and closes the dialog. Any changes made to the settings are lost.

Help—Opens the relevant Help topic.

Copyright © Right Hemisphere 2007. All Rights Reserved.

Drawing and Markup Tools

Menu bar > View > Controls and Toolbars > Drawing and Markup
Right-click menu bar > Drawing and Markup
Customize Layout dialog > Toolbars tab > Select Drawing and Markup > OK

Deep Exploration can be used to create and edit various kinds of markups (on page 151) which can be used to direct attention to, and identify parts of a model; the Drawing and Markup tools enable you to create and edit drawings and markups. Using these tools, you can:

- Create (on page 152) note, line, and shape markups.
- Hide markups and modify the scene colors (on page 156).
- Modify markup settings (on page 153) for each markup type.
- Hide and show markups (on page 156).
- Deleting markups (on page 156).
- Mark up raster files.

Markups can be moved (on page 93) using the 3D Editor toolbar, and they can also be edited (on page 156) individually.

Drawing and Markup Rules

Certain rules apply to Drawing and Markups:

- Markups are objects and as such are displayed in the 3D Objects list when they are created.
- Using the 3D Objects list, you can select, hide and show markups, group, merge, and collapse their hierarchies, and delete markups in the same way as other objects.
- For markups to be displayed on an image or model, the Show Markups option must be selected on the Display menu.
- Any changes you make to the markup settings are applied to all markups that are subsequently created. They are also applied to all existing markups unless they are, or have been edited individually.
- Model views (on page 77), based on the current view of the scene, are created or updated every time a markup is added to a scene. The results depend on whether existing model views exist, or whether the scene has been transformed:
  - If there are no existing model views, a new model view is created that incorporates the new markup.
  - If the scene has not been transformed, the existing model view incorporates the new markup. Note that you must update the model view (on page 77) to see the changes.
  - If the scene has been transformed, a new model view is created that incorporates the new markup.

Markups

Various markups can be used to direct attention to, and identify parts of a model. Individual markups can be edited using the Edit Markup dialog. You can also transform (on page 93) (move, rotate, and scale) markups using the 3D Editor tools (on page 364).

Note: For markups to be displayed, the Show Markups command must be selected from the Display menu.

The markup types include:

- Callouts (on page 135). These are created using the Illustration tools and comprise a text circle with an assigned part number and a line pointing to the part.

Copyright © Right Hemisphere 2007. All Rights Reserved.

- Dimensions (on page 171): created using the Measurement tools. They comprise white and red lines denoting where the measurement was made with text denoting the actual dimension.
- PMI markups (on page 220): created using the PMI tools. They comprise a text item with an assigned part number and a line pointing to the part.
- Teamwork markups (on page 151): created using the Teamwork tools. They comprise a text item with an assigned part number and a line pointing to the part.

Creating Markups

Drawing and Markup toolbar > Markup Tools
Drawing and Markup toolbar > Note Tools
Drawing and Markup toolbar > Drawing Tools

The Markup, Note and Drawing tools are used to create markups. The **Detail View** (on page 157) icon,  is used to create a detailed view of a specific area within the model.

When you select one of these tools, the cursor changes to a small cross . You can then begin creating a markup by clicking the model's surface to place the start point. Certain actions are then required to finish creating the markup, and these differ depending on the tool selected as described below.

Note that you can add URLs, steps or model views into any note or markup created using the Note tools.

Create Actions

Text, Point, Cloud, Arrow note, Rectangle, Line and Freehand tools: Click, drag.

Note Circle tool: Click, drag, click.

Arc tool: Three clicks.

Polyline tool: Multiple clicks, right-click.

Procedures

To create a markup:

1. Open a 3D file (on page 39).
2. Click one of the Note, Markup or Line markup tools on the Drawing and Markup toolbar.
3. Click **Global Settings**  on the tool's submenu to establish the default markup's settings.
4. Do one of the following:
   - If you are creating a text, point, arrow, or a line markup, click where you want to place the start point and drag to the leader length.
   - If you are creating a circle note markup, click where you want to place the start point, drag outwards and inwards to set the circle radius, and click once more to set the leader length.
   - If you are creating an arc markup, click where you want to place the start point, click again to place the centre of the arc circumference, and click once more to place the end point.
   - If you are creating a circle markup or a rectangular markup, click where you want to place the start point and drag outwards and inwards to set the circle radius or markup size.

Copyright © Right Hemisphere 2007. All Rights Reserved.

- If you are creating a polyline markup, click where you want to place the start point, click to place the second point, and so on, then right-click to place the end point.
- If you are creating a freehand markup, hold down the left mouse button and drag to set the shape.
- If you are creating a cloud markup, click where you want to place the start point and drag outwards to set the markup size.

The Markup Layer object and newly created markup object are displayed in the 3D Objects list, and a model view is created. You can now edit the markup type, size, font, colors and text.

To modify the markup settings:

1. Open the Settings dialog for the markup type settings you want to modify.
2. Make the selections you require.
3. Click **OK**.

Note: If you select Note, just the text will appear, however, if you select Markup the Author and Timestamp will also be displayed.

To create a callout:

1. Click the down arrow to the right of **Note** , on the Drawing and Markup toolbar.
2. Click **Global Settings** on the tool's submenu to establish the default callout settings.
3. Click **Callout** , click where you want to place the start point and drag to the leader length.

Markup Settings

Drawing and Markup toolbar > Click tool down arrow> Settings

Using the Global Settings dialogs, you can modify the default notes and markup's settings. The settings are saved to your computer registry (on page 30) for future use.

Any changes you make to the settings are applied to all markups that are subsequently created. They are also applied to all existing markups unless they are, or have been edited individually.

Markup Global Settings

Select > Drawing and Markup toolbar > Markup > Markup Global Settings

Using the Markup Global Settings dialogs, you can modify the settings for markups. The settings are saved to your computer registry (on page 30) for future use.

Any changes you make to the settings are applied to all line markups that are subsequently created. They are also applied to all existing markups unless they are, or have been edited individually.

Procedure

To open the dialog, displaying Markup Global Settings:

Click **Markup Global Settings**  on the Drawing and Markup toolbar for the Markup tool.

Copyright © Right Hemisphere 2007. All Rights Reserved.

Interface

Type—Line, Point, Arrow, Circle or Normal.

Linestyle (Line, Point, Arrow or Circle)—Select a material from the drop down list.

Edit (on page 354)—Allows you to edit the characteristics and line styles.

Text Color—Used to open the color selector to select a color for the text.

Background Color—Select a background color for the text box from the color selector, or select transparent.

Transparent—No background.

Border—Select to display a border.

Apply Global Settings to existing markups—If checked, applies the selected global settings to all existing markups.

Always on top—Select if you want all leaderlines to be on top.

Font—Select a font for the note.

Creation settings

- **Attach to mesh**—The end of the markup will snap to nearest 3d object surface.
- **Markups group by author**—Groups all markups by author in the scene tree window.
- **Markups group by date**—Groups all markups by date in the scene tree window.

OK—Closes the dialog and applies the settings. Any changes made to the settings are saved.

Cancel—Cancels the process and closes the dialog. Any changes made to the settings are lost.

Help—Opens the relevant Help topic.

Note Global Settings

Select > Drawing and Markup toolbar > Note > Note Global Settings

Using the Note Global Settings dialogs, you can modify the settings for notes. The settings are saved to your computer registry (on page 30) for future use.

Any changes you make to the settings are applied to all line markups that are subsequently created. They are also applied to all existing notes unless they are, or have been edited individually.

Procedure

To open the dialog, displaying Note Global Settings:

Click **Note Global Settings**  on the Drawing and Markup toolbar for the Note tool.

Interface

Type—Line, Point, Arrow, Circle or Text.

Note: Callout settings are edited in the Partslist dialog.

Linestyle—Select a style for the line from the drop down list.

Edit (on page 354)—Allows you to edit the characteristics and line styles.

Copyright © Right Hemisphere 2007. All Rights Reserved.

Text Color—Used to open the color selector to select a color for the text.

Background Color—Select a background color for the text box from the color selector, or select transparent.

Transparent—No background.

Border—Select to display a border.

Apply Global Settings to existing notes—If checked, applies the selected global settings to all existing notes.

Always on top—Select if you want all leaderlines to be on top.

Font—Select a font for the note.

Non-Overridable Settings

- **Attach to mesh**—The end of the markup will snap to nearest 3d object surface.

OK—Closes the dialog and applies the settings. Any changes made to the settings are saved.

Cancel—Cancels the process and closes the dialog. Any changes made to the settings are lost.

Help—Opens the relevant Help topic.

Drawing Global Settings

Select > Drawing and Markup toolbar > Line > Drawing Global Settings

Using the Drawing Global Settings dialog, you can modify the settings for line markups. The settings are saved to your computer registry (on page 30) for future use.

Any changes you make to the settings are applied to all line markups that are subsequently created. They are also applied to all existing line markups unless they are, or have been edited individually.

Procedure

To open the dialog, displaying Drawing Global Settings:

Click **Drawing Global Settings**  on the Drawing and Markup toolbar for the Line tool.

Interface

Type—Line, Arc, Polyline, Freehand, Closed Freehand, Rectangle, Circle or Cloud.

Linestyle—Select a material for the line from the drop down list.

Edit (on page 354)—Allows you to edit the characteristics and line styles.

Always on top—Select if you want all markup drawings to be on top.

Apply Global Settings to existing drawings—If checked, applies the selected global settings to all existing drawings.

OK—Closes the dialog and applies the settings. Any changes made to the settings are saved.

Cancel—Cancels the process and closes the dialog. Any changes made to the settings are lost.

Help—Opens the relevant Help topic.

Copyright © Right Hemisphere 2007. All Rights Reserved.

Editing Markups

Double-click markup in viewport, 3D Objects list or Layers list
Right-click markup in viewport, 3D Objects list or Layers list > Object Properties

Individual markups can be modified after they are created using the Edit Markup dialog. The tabs and options differ depending on the type of markup you are editing. For example, you can modify the font type and line color of callouts using the Callout tab.

Any editing you perform using the Edit Markup dialog is applied to the selected markup only, and for all new markups subsequently created. Note that you can make global changes to PMI markups via the PMI Settings dialog (on page 377).

Procedure

To edit a markup:

1. Do one of the following:
   - Double-click the markup you want to edit in the viewport, 3D Objects list, or Layers list.
   - Select the markup you want to edit, right-click over the markup or in the viewport and click **Object Properties**.

   Note: Double-clicking a URL markup opens the URL address in the browser; we recommend double-clicking these markups in the 3D Objects list for editing.
2. Make the selections you require.
3. Click **Apply** and then click **OK**.

Displaying and Deleting Markups

Drawing and Markup toolbar > Show/Hide Markup

You are able to hide, show, and delete markups. For markups to be displayed on an image or model, the Show Markups option must be selected on the Display menu.

Note that there are multiple ways of deleting markups.

Procedures

To show and hide markups:

Click **Show / Hide Markup**  on the Drawing and Markup toolbar.

To delete markups:

Do one of the following:

- Select the markup (on page 88) in the viewport, 3D Objects list or Layers list, and then press **Delete**.
- Select the markup (on page 88) in the viewport, right-click the markup in the viewport, 3D Objects list, or Layers list, and then click **Delete Objects**.

Copyright © Right Hemisphere 2007. All Rights Reserved.

To minimize all notes and markups:

- Click **Minimize All Notes** on the Drawing and Markup toolbar. All notes and markups will be replaced by the minimized text icon, .

To redisplay all notes and markups:

- Click **Minimize All Notes** or the minimized text icon again.

To minimize individual notes and markups:

- Click the top right corner of the text box, 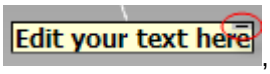

, the note or markup will be replaced by the minimized text icon, . To redisplay the note or markup, click on the minimized text icon again.

Detail View

Select > Drawing and Markup toolbar > Detail View

Detail views allow you to create additional 3D viewports in a scene. Multiple views can be opened in a scene. When closed, they appear as special callouts. Each detail view has full camera manipulation, and contains a specific view of the model.

The Detail View option allows you to 'zoom in' to a specific region in your model to view an object in more detail. This feature operates in a similar way to the callout feature, highlight the area that you would like to see in a more detailed view, then drag the leaderline to an area of the scene where the detail view will be displayed. The area of the detail view can be resized and repositioned by hovering the cursor over the view.

Procedure

To create a Detailed View:

1. Click **Detail View** on the Drawing and Markup toolbar.
2. Highlight the area on the model that you want to show in detail, click the center of the area and drag out until you have the required size.
3. Adjust the length and position of the leaderline so that it is in the correct location.
4. Click and drag the detail view window to the right size.
5. The detailed view will be displayed.

Copyright © Right Hemisphere 2007. All Rights Reserved.

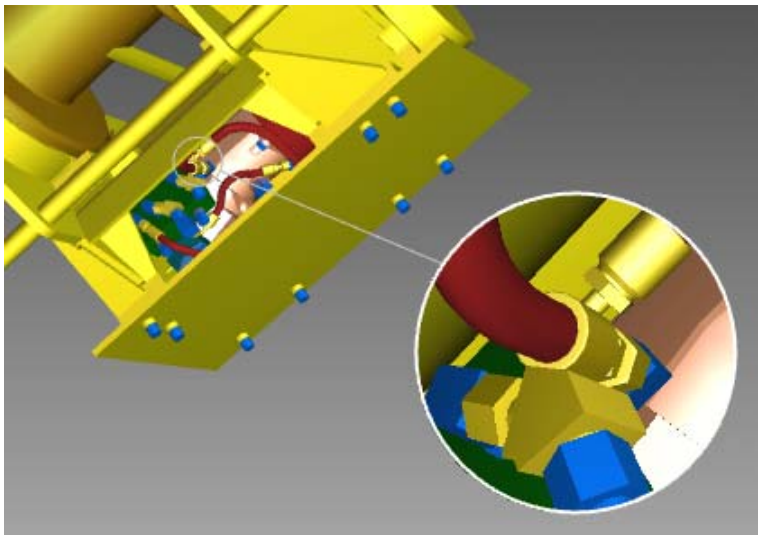

6. The detail view window can be customized in 4 ways:

   - **Position**, with the crossed arrows.

   - **Width**, with the horizontal arrow.

   - **Height**, with the vertical arrow.

   - **Width and Height** combined, with the diagonal arrow.

7. To resize the detail view window, hover the cursor over the image, when it changes to one of the direction arrows, drag the window to the required size or position.

8. Right click the detail view to:

   - Change the viewport settings.

   - Select a design for the detail view object, box, circle, etc.

   - Autoclose the detail view.

   - Hide the link node (markup).

   - Change the line width.

   - Update the model view.

   - Close the dialog box.

Copyright © Right Hemisphere 2007. All Rights Reserved.

Detail View Global Settings

Using the Detail View Global Settings dialog, you can modify the default line material and color. The settings are saved to your computer registry (on page 30) for future use.

Any changes you make to the settings are applied to all detail views that are subsequently created. They are also applied to all existing views unless they are, or have been edited individually.

Procedure

To open the Teamwork dialog, displaying Detail View Global Settings:

Click **Global Settings**  on the Drawing and Markup toolbar for the Detail View tool.

Interface

Line Material—Select a material for the line from the drop down list.

Edit (on page 354)—Allows you to edit the characteristics and line styles.

Always on top—Select if you want all leaderlines to be on top.

OK—Closes the dialog and applies the settings. Any changes made to the settings are saved.

Cancel—Cancels the process and closes the dialog. Any changes made to the settings are lost.

Help—Opens the relevant Help topic.

Continuous Draw

Drawing and Markup toolbar > Continuous Draw - Use Override Linestyle
Drawing and Markup toolbar > Continuous Draw - Do not use Override Linestyle

Continuous draw allows you to draw multiple callouts or polylines, without having to click the toolbar button every time. You can opt to override the material used for polylines by using the linestyle nominated in the Override Linestyle Settings (on page 160) dialog.

Procedures

To turn on Continuous Draw:

1. Open a 3D file (on page 39).
2. Do one of the following:
   - Click **Continuous Draw - Use Override Linestyle**  on the Drawing and Markup toolbar. Continuous Draw uses the override linestyle setting to draw multiple polylines.
   - Click **Continuous Draw - Do not use Override Linestyle**  on the Drawing and Markup toolbar. Continuous Draw uses the default linestyle setting to draw multiple polylines.
3. Click **Override Linestyle Settings**  on the tool's submenu to establish the override linestyle's settings.

Copyright © Right Hemisphere 2007. All Rights Reserved.

Override Linestyle Settings

Drawing and Markup toolbar > Override Line Style Settings

Using the Override Line Style Settings dialog, you can modify the default line style. The settings are saved to your computer registry (on page 30) for future use.

Interface

Line Style—Select a material for the line from the drop down list.

Edit (on page 354)—Allows you to edit the characteristics and line styles.

OK—Closes the dialog and applies the settings. Any changes made to the settings are saved.

Cancel—Cancels the process and closes the dialog. Any changes made to the settings are lost.

Help—Opens the relevant Help topic.

Copyright © Right Hemisphere 2007. All Rights Reserved.

Embedding Content

2D and 3D content can be embedded into PowerPoint spreadsheets, Word documents, FrameMaker documents, and Excel spreadsheets, using the files themselves or using links that reference the files.

Links are dynamic, in that they are linked to the most recent version of the item. So if you embed a link into an Office document and the related file is modified, you can upload the most recent version (on page 209) of the file to Deep Exploration and the document link is automatically updated.

Note: To embed 3D content, you must have Deep Publish (http://www.righthemisphere.com/deeppublish) installed on your computer.

Here, we describe embedding the files into a document. To embed content using a link, see the Deep Publish User Reference (Start > Programs > Right Hemisphere > Deep Publish > Help).

Procedure

To insert a file into a document:

1. Open a new or existing Word or FrameMaker document, or a PowerPoint or Excel spreadsheet.
2. Drag the file from the File list (on page 384) tabs into the external document.
3. If you are inserting a file for the first time, click **OK** in the Default Rendering Mode dialog to select the automatically detected graphics mode as the default.

   Note: You can modify the default graphics mode at a later date if required.
4. Save the document in the usual way for the Office application you are using.

Copyright © Right Hemisphere 2007. All Rights Reserved.

Illustration Tools

Menu bar > View > Controls and Toolbars > Illustration
Right-click menu bar > Illustration
Customize Layout dialog > Toolbars tab > Select Illustration > OK

The Illustration tools provide high quality line-art and shading for use in technical documentation for print, Web and multimedia presentations, and is ideal for companies involved with documentation of manufactured products and for presenting 3D images that are clear and concise.

Using Illustration you can create easy to understand illustrations for 3D CAD work in progress, achieve a consistent look and quality throughout documentation, and are able to avoid the retracing of CAD models or photos:

- Render to raster (on page 162) or vector (on page 163) output.
- Control of edge threshold and line weight.
- Optional use of textures, colors and default materials.
- Parts listing display (Bill of Materials).
- Use interactive callouts (on page 135) to direct attention to, and identify parts of a model.
- Include BOM within vector illustrations.

Raster Illustration

Menu bar > Rendering toolbar > Renderer Properties
Illustration toolbar > Raster Illustration

Using the Raster Illustration tool, you can create a raster illustration for the current scene and save to various raster different file formats (on page 449). Scenes are either rendered directly to the active viewport or saved to file based on the settings established using the Properties dialog (on page 268).

You can also choose to display the rendered scene in a separate window via the renderer output settings (on page 268).

Procedure

To render a scene as a raster illustration:

1. Open a 3D file (on page 39).
2. Click the arrow next to the Raster Illustration tool.
3. Do one of the following:
   - Click **To Viewport** to render the scene directly to the active viewport or to a separate window depending on your renderer output settings (on page 268).

     Note: You cannot save the rendered file.

   - Click **To File** to render the scene, display the illustration in the viewport, and save it to file.
4. Click **Raster Illustration**  on the Illustration toolbar.
5. Make the selections you require.
6. Click **Render**.
7. If you selected to display the statistics, click Close to close the dialog after the rendering is complete.

Copyright © Right Hemisphere 2007. All Rights Reserved.

8. Click **OK**.
9. Do one of the following:
   - If you are saving the file, navigate to and select a location in which to save the illustration, enter a name and select a file format, and then click **Save**.
   - If you are rendering to the viewport, click **OK**.

Vector Illustration

Illustration toolbar > Vector Illustration

Using the Vector Illustration tool, you can create a vector illustration for the current scene and save it to various vector different file formats (on page 449).

You can establish a number of vector rendering settings using the Vector Illustration dialog including line thickness, wireframe display, callout rendering, and parts listing inclusion. The options displayed differ depending on the file format you select.

Please note that outlines (feature lines) are exported as curves (a solid representation) in the following situations:

- When rendering to the SVG and AI formats.
- If the scene includes solids.

Otherwise, all polygonal models export outlines as polylines (a series of line segments). For all other formats, geometry is imported as meshes.

Note: While the 'save' dialog is used to save to most file formats, the Vector Illustration tool (on page 163) can be used to save files to a number of additional formats including .cgm, .eps, and .swf.

Procedure

To render a scene as a vector illustration:

1. Open a 3D file (on page 39).
2. Click **Vector Illustration**  on the Illustration toolbar.
3. Select a file format, in which to save the illustration.
4. Click **Browse**, navigate to and select a location to save the illustration.
5. Enter a name for the illustration and click **Save**.
6. Make the selections you require.
7. Click **Advanced** if you want to make further advanced selections.
8. Make the selections you require and click **OK**.
9. Click **Render**. The illustration is saved immediately.
10. Do one of the following:
    - Click **Cancel**.
    - If you chose to leave the dialog displayed, continue making selections to render the scene again, then click **Cancel**.

Copyright © Right Hemisphere 2007. All Rights Reserved.

Interface

File—Displays the location and name under which the illustration is saved.

Note: The default illustration file details, including the location, are identical to that of the original file, excluding the extension.

Browse—Used to select the location and name for the saved illustration.

File format—Used to select the format in which you want to save the illustration. The options that display in both this dialog and the advanced settings dialog differ depending on the file format selected.

- **Adobe Illustrator Vector Graphic (.ai)**—Saves in the Adobe Illustrator (.ai) format.
- **AutoCAD Drawing Interchange (.dxf)**—Saves in the AutoCAD (.dxf) format.
- **Computer Graphics Metafile ASCII (.cgm)**—Saves in the Computer Graphics Metafile ASCII (.cgm) format.
- **Computer Graphics Metafile binary (.cgm)** —Saves in the Computer Graphics Metafile Binary (.cgm) format.
- **Shockwave Flash Object (.swf)**—Saves in the ShockWave Flash Object (.swf) format.
- **Scalable Vector Graphic (.svg)**—Saves in the Scalable Vector Graphics (.svg) format.
- **Tagged Image File Format (.tif)**—Saves in the Tagged Image (.tiff) format.
- **Adobe Encapsulated Postscript (.eps)**—Saves the Adobe Encapsulated Postscript (.eps) format.

Note: Adobe Illustrator must be used to view files rendered in the .ai format.

Lines—Used to select various line output options for the illustration.

- **Tolerance angle (degrees)**—Determines the degree of angle tolerance for all rendered outlines. If the angle between two adjacent faces is greater than this value, then the edge between these faces is treated as an outline edge.
- **Line thickness**—Determines the thickness of rendered lines. Note the following when entering a line thickness number:
  - The units for measuring line thickness is determined by the 'Canvas Size'.
  - If you enter 0 (zero), lines are created as 1 divided by infinity. That is, absolutely thin.
- **Line boundary**—Determines the thickness of the object boundaries, range is 0 - 10.
- **Calculate intersections** (on page 165)—Draws lines along all face-face intersections. Vectors are normally calculated using triangle edges. If the lines of intersection fall outside of triangle edges where geometry or objects intersect each other, this option can be used to calculate the triangle intersections and output them as vectors.
- **Allow self-intersections**—Tests all mesh faces for intersection. Not using this option ensures only faces of different meshes are tested for intersection. For example, if two faces belonging to Mesh1 intersect, the line appears only if this option is selected. If two faces intersect, with the first face belonging to Mesh1 and the second to Mesh2, the intersection line is drawn regardless of this option setting. We recommend not using this option.
- **Remove hidden lines**—Removes lines that are hidden by the geometry. For example, a Z-buffer. This is usually what is required for rendering. However, at times you may want a see-through effect. We recommend selecting this option.
- **Show as wireframe**—Causes all edges to be treated as outline edges. The tolerance angle setting becomes redundant when this is selected.

Canvas Size—Used to specify the illustration's size and orientation when printed.

- **Size** —Select a standard size from the drop down menu, or select **Custom**.
- **Width**—Specify a custom width for the illustration.

Copyright © Right Hemisphere 2007. All Rights Reserved.

  - **Inches**—Specify the width in inches.
  - **cm**—Specify the width in centimetres.
  - **mm**—Specify the width in millimeters.
  - **Points**—Specify the width in points.
  - **Picas**—Specify the width in picas.
- **Height**—Specify a custom height for the illustration.
  - **Inches**—Specify the height in inches.
  - **cm**—Specify the height in centimetres.
  - **mm**—Specify the height in millimeters.
  - **Points**—Specify the height in points.
  - **Picas**—Specify the height in picas.
- **Landscape**—Select to publish the illustration with a landscape orientation. This option is not available if you are rendering to the .tiff format.
- **Constrain Proportions**—Select to constrain the proportions of the illustration. This option is only available if you are rendering to the .tiff format.

Colors—Used to select the colors to use in the illustration.

- **Object**—Uses the object's color for the rendered lines.
- **Line**—Used to open the color selector to select a color for rendered lines. This option is only available if the Object check box is not selected.
- **Background**—Used to open the color selector to select a color for the background. This option is only available when saving the illustration to .cgm, .swf, and ,svg formats.

Include callouts—Includes callouts in the illustration.

BOM—Used to determine if and where the BOM is placed on the illustration.

- **None**—Excludes the BOM from the illustration.
- **Text file**—Saves the BOM as a separate text file.
- **Bottom**—Places the BOM at the bottom of the illustration.
- **Right**—Places the BOM at the right of the illustration.

Close dialog when complete—Closes the dialog as soon as the process is complete.

Render—Applies the rendering settings to the file. The progress bar indicates how far the process has progressed.

Advanced (on page 166)—Opens the Advanced Settings dialog. The options displayed differ depending on the file format you select.

Cancel—Cancels the current process and closes the dialog, or if you have already rendered the file, closes the dialog.

Help—Opens the relevant Help topic.

Copyright © Right Hemisphere 2007. All Rights Reserved.

Calculating Intersections

Vectors are normally calculated using triangle edges. You can use the Calculate Intersections option to calculate where triangle intersections are located and output them as vectors if the lines of intersection fall outside of triangle edges when geometry or objects intersect each other. That is, you can draw lines along all face-face intersections.

In the first example, the lines representing the intersection of the spokes with the rim (the inside of the wheel) have not been drawn. Using Calculate Intersections in the second example, the lines have been drawn.

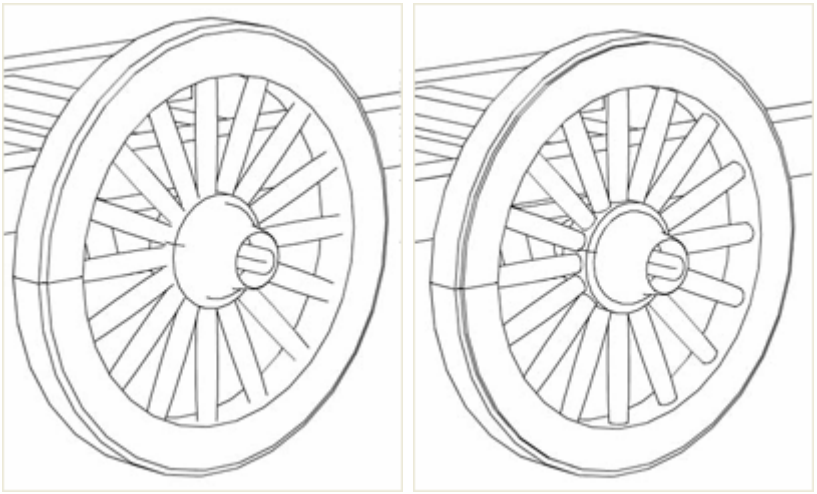

Without calculated intersections / Calculated intersections

Advanced Settings Dialog

Illustration toolbar > Vector Illustration > Advanced Settings

The Advanced Settings dialog is used to control advanced render settings for Vector Illustration, including creating .html files and various print options.

We recommend that you only modify the Raster/Vector File and Line Filtering settings, and use the default settings for all other options.

Interface

Hide back-facing geometry—Hides any back-facing geometry. This option ensures that the faces/polygons that you cannot see from the current view are not rendered, therefore increasing processing speed.

Multithreading—If checked, rendering is performed in multiple threads. You need to have a multithreaded processor to use this feature.

Multiple Layers—If checked (default) reduces all objects to a single layer. If unchecked produces a separate layer for each object

Filled callouts—Used to insert a colour fill into callouts. If this is not selected, the callouts remain as polylines. This option is available for .cgm, .ai, and .svg file formats only.

CGM Format—Used to choose the format in which to render a .cgm file.

- **Version 1**—Creates a .cgm file.

Copyright © Right Hemisphere 2007. All Rights Reserved.

- **Version 4 / WebCGM**—Creates a WebCGM file.

HTML File—Used to choose whether an .html file is created when rendering to the .swf format.

- **None**—Prevents the creation of an .html file.
- **Create**—Creates an .html file.
- **Create and open**—Creates an .html file and displays it in your default browser.

Thick and Thinning method—Used to set line thickness in the illustration.

- **Complete**—Every line is thick.
- **Pop line**—Only the outside edges are thick.

Raster / Vector File—Used to select options relating to the creation of a 'hybrid' image file when rendering to the .svg format. This allows you to interact with the BOM and callouts. For example, when you click an object in the BOM, the associated callout is highlighted. Hybrid files comprise a vector .svg image and a raster .png image and they have a '.svg.png' extension. A .svg file is also created when you render to a hybrid file.

Note: Only the raster or vector component of a hybrid file is displayed when you view it in Deep Exploration. To view the entire hybrid image, you must use a Web browser.

- **None**—Creates a single image type file. A hybrid file is not created.
- **Render Raytracer**—Creates a hybrid file using the Raytracer renderer.
- **Render Software Z-buffer**— Creates a hybrid file using the Software Z-buffer renderer.

  Note: The Render Raytracer and Render Software Z Buffer options are available for .cgm, .ai, and .svg file formats only.

- **Raster image scale**—The amount used to scale the hybrid file image. For example, if you enter 1, the new image is the same size as the original viewport image. If you enter 2, the new image is double the size of the original viewport image.
- **Flat color fill**—This option is available for .cgm, .ai, .svg, and .swf file formats only.

  Note: For Flash (SWF format), Render Raytracer and Render Software Z Buffer are unavailable, however, 'Flat color fill' is available.

Line Joining—Used to establish line settings for the rendered file.

- **Different line types**—If checked, different edge types may be joined into a single polyline.
- **Minimum angle**—If the angle between two adjacent edges is more than the 'minimum angle', they may be joined into a single polyline, range is 0 - 180 degrees.

Line Filtering—Used to establish line filtering settings for the rendered file.

- **Approximate shared boundary edges**—This is effective only for source scenes where geometry has cracks (CAD formats). The algorithm finds edges which are very close together and makes one edge from two.
- **Filter lines**—Removes any duplicated and/or unnecessary additional lines that may be displayed in the rendered file.
- **Tolerance**—Determines the tolerance to apply when filtering lines. A low tolerance value removes a small number of lines and results in a slow processing speed. A high tolerance value removes more lines and therefore, the faster processing speed is faster.
- **Break polylines at intersection**—Splits lines at the point where they are intersecting with other lines. This option is effective only for later manual filtering.

Image Resolution—Used to determine the resolution of the image or how many pixels are defined in the boundary of a square inch, when rendering to the .tif format. This is expressed as dots per inch (DPI); DPI is more correctly expressed as pixels per inch (PPI).

- **Horizontal**—The DPI across the horizontal axis.

Copyright © Right Hemisphere 2007. All Rights Reserved.

- **Vertical**—The DPI across the vertical axis.

Solids (Highly Advanced)—Used to establish advanced settings for models that contain solids.

- **Rational approximation tolerance**—Converts rational BSplines into non-rational BSplines. Rational BSplines have a weight value associated with each vertex. That is, they have X,Y,Z, and W coordinates. Non-rational BSplines do not have a weight coordinate. This option is only available when rendering to the .svg or .ai formats.
- **Tessellation tolerance**—Used to set the maximum distance allowed between an edge/curve and its tessellation (arrangement and density of the polygons. This option is unavailable when rendering to the .svg or .ai formats.
- **Voxel visibility detection**—Detects hidden curves based on voxels (volume pixels) and decides whether they should be included in the output illustration. Voxels are the smallest distinguishable box-shaped part of a three-dimensional image - essentially they are 3D pixels. They are used to add depth to images. We strongly recommend not using this option as it significantly reduces processing speed.

OK—Closes the dialog and applies the settings. Any changes made to the settings are saved.

Cancel—Cancels the process and closes the dialog. Any changes made to the settings are lost.

Defaults—Resets all settings to their default values.

Help—Opens the relevant Help topic.

Copyright © Right Hemisphere 2007. All Rights Reserved.

Layers

Scene Components panel > Layers

Layers are used to group scene objects into a single hierarchy level and so provide an alternate way to group, manage, and display scene geometry and elements. That is, layers are not related to the scene's hierarchy. For example, a scene could contain an electrical wiring and a plumbing layer. This allows for rapid editing and scene control, and easy management of complex scenes.

For example, grouping components common to a particular function may not be possible by assembly hierarchy in a model of an engine compartment. The model may contain multiple assemblies also just parts of other assemblies. It may be convenient to place all the engine compartment components in one layer for easy display optimization when the cover is in place.

Layers function in the following manner:

- Layers are created either when a file is imported or by selecting objects and then creating a new layer.
- You can modify the layers properties and the objects within them.
- You can group unrelated objects into a layer. For example, a single layer could contain various parts of the model, callouts, and lights.
- You can add all objects that occur in the same hierarchy level (on page 394) to a layer. This is helpful when creating layers that you want to be made from objects that are at the same hierarchy level. For example, if you have an object with three sub-objects each of which is made of four parts. You can select the three sub-objects automatically by selecting them at the same level.
- You can select all objects that are associated with a layer.
- Layers can be saved within .rh version 4.0 files (on page 523).
- You can modify layers that were created when a file was imported.
- When importing a scene with bones, a new layer is created and all bones are assigned to that layer.

The Layers Panel (on page 357) is used to create new layers and modify the layer display. Using the right-click menus (on page 418) you can delete layers, add and remove objects, and modify the layer properties (on page 420).

Note: When you create a model view (on page 77), an associated layer comprising the currently visible objects is also created.

Procedures

To create a layer:

1. Select the objects in the scene.
2. Open the Layers panel.
3. Click **Create** .

The layer is created containing the selected objects.

To delete a layer:

- In the Layers panel, right-click the layer you want to delete and click **Delete**.

Copyright © Right Hemisphere 2007. All Rights Reserved.

To add objects to a layer:

1. Select the objects in the scene.
2. Right-click the layer to which to add the objects and then click **Add Selected Objects**.

To remove objects from a layer:

- In the Layers panel, right-click the layer you want to remove all objects and click **Remove All Objects**.
- In the Layers panel, right-click the object you want to remove and click **Remove From Layer**.

To edit a layer name:

- In the Layers panel, right-click the layer you want to edit and click **Rename**.
- In the Layers panel, click the layer you want to edit and press F2.

To duplicate a layer:

- In the Layers panel, right-click the layer you want to duplicate and click **Duplicate**.

To toggle the display of the layers:

- In the Layers panel, click **Unique** , and then click the checkbox, next to the layer, for which you want to display the assigned objects.

  Note: Only only the objects that are assigned to this layer are displayed. Any objects that are not assigned to the layer are hidden.

To select objects associated with a layer:

- Click the layer in the Layers panel for which you want to select the objects.

To reorder objects within a layer:

- Select any object (or objects), in the layer, and 'drag and drop' it to its new position.

Copyright © Right Hemisphere 2007. All Rights Reserved.

Measurements

Menu bar > View > Controls and Toolbars > Measurements
Right-click menu bar > Measurements
Customize Layout dialog > Toolbars tab > Select Measurement > OK

The measurement tools allow you to measure the distance between a single object or two object elements in a scene, or an angle between elements. For example, between an object's faces, arcs, and vertices. In many cases, these measurements can replace the need for 2D drawings. For example, you can add key measurements to the scene, and you can read key dimensions for manufacturing checks.

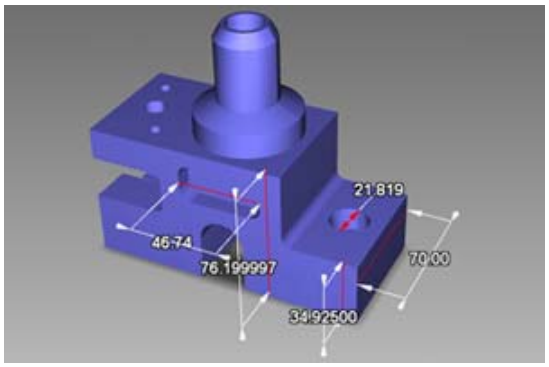

Object with multiple dimensions

When performing a measurement, the elements that can be measured within the object are highlighted when your cursor moves over them. You can limit the types of elements that are highlighted when you perform a measurement via the Object Elements toolbar (on page 173).

- **Vertices:** A corner of a polygon where two edges meet, or of a polyhedron where three or more faces meet. A polyhedron is a three-dimensional solid bounded by polygons. These are displayed as green 'points' when selected.
- **Edges:** Lines of intersection between two faces.
- **Faces:** Planar surfaces of a geometric solid. These are displayed as white lines surrounding the selected face.
- **Arcs:** Lines that curve around a face with a center point displayed in red.

The first element that is measured is displayed as bounded; this determines the bounds of the measurement. For example, the distance is not calculated past the end of an edge, or off the boundary of a face. The second measurement is unbounded. This allows you to measure the distance between a face and a plane or the extension of an edge. For example, in the image below the arc is bounded and the face is unbounded.

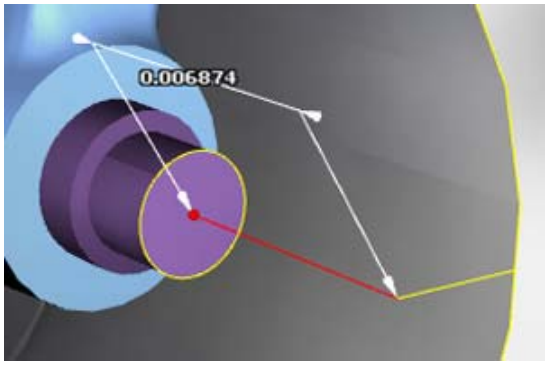

Distance measurement between an arc and a face

Copyright © Right Hemisphere 2007. All Rights Reserved.

When you perform a measurement for a single object element, the resulting values are:

- Measurement on a vertex: The position of the vertex in the scene.
- Measurement on an edge: The length of the edge.
- Measurement on a face: The area of the face.
- Measurement on an arc: The radius of the circle.

Once you perform a measurement, a dimension object is created in the scene. Dimensions are treated in the same way as other objects and can be edited and deleted (on page 151).

Various settings (on page 174) can also be applied to the measurement tools to determine the way in which the measurements are calculated and displayed.

Note: Accuracy is reduced if a model uses a high level of polygon reduction.

Measurements are automatically updated as the objects to which they are associated are moved in the scene.

Measurement Rules

Certain rules apply to measurements:

- Once a measurement is made, the related dimension object is created in the scene.
- Dimensions are markup objects and as such are displayed in the 3D Objects list when they are created.
- Using the 3D Objects list, you can select, hide and show dimensions, group and collapse their hierarchies, and delete dimensions in the same way as other objects.
- When you rotate, scale, or pan models, the dimensions move in relation to the parts while remaining the same size.
- Dimensions can be moved, rotated, and scaled separately from the model.
- For dimensions to be displayed on an image or model, the Show Markups command must be selected from the Display menu.

Procedures

To measure a single object element:

1. Click **Global Settings**  on the Measurements toolbar and modify the settings (on page 174) as required.
2. Click **Distance Measurement**  on the toolbar.
3. Click the element types on which you want to measure on the Object Elements (on page 173) toolbar.
4. Place the cursor over the area from which you want to measure until the first element is highlighted, and then click the element.
5. Move the cursor away from the model and, with no elements highlighted, click again.
6. Drag the dimension away from the model, and then click again.

The measurement is made and the dimension is created.

To measure the distance between two object elements:

1. Click **Distance Measurement**  on the Measurements toolbar.

Copyright © Right Hemisphere 2007. All Rights Reserved.

2. Click the element types on which you want to measure on the Object Elements (on page 173) toolbar.
3. Place the cursor over the area from which you want to measure until the first element is highlighted, and then click the element.
4. Click other element types on the Object Elements toolbar if you want to measure between other elements.
5. Place the cursor over the area to which you want to measure until the second element is highlighted, and then click the element.
6. Drag the dimension away from the model and click again.

The measurement is made and the dimension is created.

To measure the angle between two object elements:

1. Click **Angle Measurement**  on the Measurements toolbar.
2. Click the element types on which you want to measure on the Object Elements (on page 173) toolbar.
3. Place the cursor over the element from which you want to measure until it is highlighted, and then click the element.
4. Place the cursor over the element to which you want to measure until the second element is highlighted, and then click the element.
5. Select either the internal or external angle, the angle is measured and the dimension is created.

Object Elements Toolbar

Measurements toolbar > Distance Measurement

When you create a measurement, you use the Object Elements toolbar to display, and snap to only the object elements that you want to measure; either vertices, edges, faces, or arcs. For example, if you select Vertices and Faces on the toolbar, only those elements are highlighted in the scene.



Object Elements toolbar

The elements that can be measured within the object are highlighted when your cursor moves them.

Interface

 **Vertices**—Displays green 'points' indicating a corner of a polygon where two edges meet, or of a polyhedron where three or more faces meet. A polyhedron is a three-dimensional solid bounded by polygons.

 **Edges**—Displays lines of intersection between two faces.

 **Faces**—Displays planar surfaces of a geometric solid.

 **Arcs**—Displays lines that curve around a face with a center point and radius displayed in red.

Cancel—Closes the toolbar and cancels the process.

Copyright © Right Hemisphere 2007. All Rights Reserved.

Measurement Global Settings Dialog

Measurements toolbar > Global Settings

The Measurement Global Settings dialog is used to define the measurement settings including the display of measurement values, the type of measurement created when measuring arcs and circles, and the units in which to display angle measurements.

You can also edit individual measurement markups (on page 151) using the Edit Markup dialog.



Measurements Toolbar

Procedures

To open the Measurement Settings dialog:

Click **Measurement Global Settings**  on the Measurements toolbar.

To modify the dimension settings:

1. Open the Global Settings dialog.
2. Make the selections you require.
3. Click **OK**.

Interface

General—Used to establish general settings.

- **Always on top**—Draws the dimension and dimension lines on top of all the objects in the scene.
- **Draw construction lines**—Draws the red construction line between the points that are being measured.
- **Draw surface features**—Draws the surface features. These include the vertices, highlighted edges, and surfaces.
- **Line color**—Select a color from the color selector
- **Precision**—Determines the number of decimal places to display in the dimension.
- **Display Dimension**—Used to establish how to display the dimension.
  - **Vectors**—Draws the dimension as a vector.
  - **Billboards**—Draws the dimension as a billboard. That is, the dimension rotates to always face the camera. When printed to a vector-based file, the measurement is converted to vector line art.
  - **Billboards font**—Used to select a font for the billboard dimension.
  - **Vector font scale**—Used to select a scale for the vector dimension.

Arcs—Used to establish the dimension to measure when measuring arcs or circles.

- **Radius**—Measures the circle's radius.
- **Diameter**—Measures the circle's diameter.

Angles—Used to establish the angle dimension between lines.

- **Degrees**—Measures the angle in degrees.

Copyright © Right Hemisphere 2007. All Rights Reserved.

- **Radians**—Measures the angle in radians.

OK—Closes the dialog and applies the settings. Any changes made to the settings are saved.

Cancel—Cancels the process and closes the dialog. Any changes made to the settings are lost.

Help—Opens the relevant Help topic.

Copyright © Right Hemisphere 2007. All Rights Reserved.

High Dynamic Range Images

High dynamic range images (HDRI) differ from conventional images (tone-mapped images) in that they store information about how much energy reaches a pixel, whereas conventional images store a color at each pixel, allowing you to view images at differing exposure levels. So, HDRIs can contain detail in the very dark and in the very light portions of the image. Hence the name High Dynamic Range.

A number of HDR formats are supported (on page 449), for example .exr and .hdr files, and certain .tiff variants. When you open an HDR file, resolution controls are displayed in the Information bar, that allow you to adjust the parts of the image.

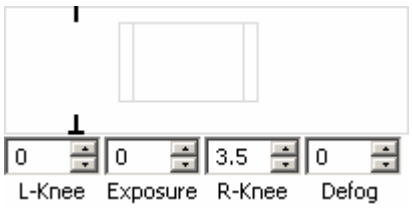

HDR Resolution Controls

You can create a high dynamic range image (HDRI) from a sequence of images.

Note: Much of the following information is from the OpenEXR Web site (http://www.openexr.com).

F-Stop

The term 'f-stop' is a way to express relative amounts of light. F-stops are the base-2 logarithm of the ratio between two light intensities.

The term is derived from the lens aperture in photographic cameras. For a lens with focal length L, and an iris with diameter D, the aperture, f, is L/D. Most photographic lenses have a an adjustable iris; the adjustment ring usually has stops that can be felt when the ring is moved. On the ring, each stop is marked with the corresponding value of f. Customarily, some subset of the following range of f values is marked: 1, 1.4, 2, 2.8, 4, 5.6, 8, 11, 16, 22, 32, 45, 64. The ratio between one value and it successor is close to the square root of 2, which means that from one f-stop to the next, the area of the iris opening, and thus the amount of light passing through the iris, varies by a factor of 2.

When we say that an image has a dynamic range of 10 f-stops, we mean that the ratio between the brightness of the brightest and the darkest part of the image is the same as the between the amounts of light passing through a lens at two aperture settings 10 f-stops apart. In other words, the ratio between the brightest and darkest parts is two to the tenth power, or 1024.

L-Knee and R-Knee

Allows you to compress the dynamic range of the original image so that a wider range of pixel values can be displayed without clipping. Values below knee low remain untouched. Values between knee low and knee high are compressed into the range [knee low, middle gray + 3.5 f-stops]. Values above knee high are clamped.

Exposure

The possible range of pixel values is conceptually infinite for HDRIs. The pixels simply represent the luminance values that were present in the scene when the image was recorded.

In most HDR images, there is no easily identifiable maximum value that should be mapped to a display's 'white' (on page 177). We map HDR pixel values to low dynamic range (LDR) display values using a process that is similar to choosing the right exposure for a photo:

Copyright © Right Hemisphere 2007. All Rights Reserved.

In conventional photography, with film, correctly exposing an image puts a 'middle gray' object with 18% reflectance in the middle of the film's usable dynamic range. 18% is an approximation of the average reflectance of an average scene. (Kodak and other companies sell 18% gray for exposure measurements). For example, .exr display assumes that a pixel value of 0.18 represents 18% gray, and computes the correct 'exposure' by placing this value in the middle of the display's usable dynamic range, that is 3.5 f-stops darker than the display's maximum white.

You can make an image brighter or darker by adjusting the exposure. The units on the exposure slider are f-stops. Increasing the exposure by 1.0 doubles the image's overall brightness, and decreasing the exposure reduces the brightness.



Exposure 0.0 / Exposure -0.5

Defog

When an image is recorded, stray light in the camera causes slight fogging of the image, which reduces the image's dynamic range. Note that fogging adds a small amount of unwanted light to the entire image.

Cameras are designed to reduce stray light enough to make fogging of a correctly exposed LDR image invisible. However, if an image contains very bright regions, fogging does become noticeable, especially if .exr display's exposure is set very high.

Defogging attempts to remove some of the fog by computing an image's average color, multiplying this color by some small number (adjustable with the defog slider), and subtracting this color from all pixels.

Interface

- **L-Knee**—Determines the left margin for the change in resolution.
- **Exposure**—Determines the image exposure and lighten or darken the selected area.
- **R-Knee**—Determines the right margin for the change in resolution.
- **Defog**—Determines the amount of defogging to remove from the image.

Copyright © Right Hemisphere 2007. All Rights Reserved.

Color and HDR Images

White

In a normal tone-mapped image, white is represented by 255,255,255 color values. That is, the brightest color possible. In an HDR image, what we see as white depends entirely on the exposure.

Background

When you look at a fluorescent tube or an incandescent light, they appear to be different colors, but we call them both 'white'. Incandescent lamps have a color temperature of 3200 degrees Kelvin (3200K). This means they are the same color as a perfect black body would be if it were heated to 3200K. Fluorescents come in several variants and have different names for each brand, but they tend to be 3500K, 4500K, and 6500 K. The 6500K appears bluer than the 3200K of an incandescent bulb. Additionally, you will often see values like this used when setting up a computer monitor. You set the white-point to one that looks right in the environment in which you are looking at the images. So, in a bright room under fluorescents, you might choose 9800K; in a dark room with a single incandescent, you might choose a much lower figure.

The chromaticity diagram below represents all the colors human beings can see. The white points are drawn in a line through the diagram. These are sometimes also called 'Black body lines'. The brighter triangle shows the range of colors that can be shown on a television set monitor (just the colors, not the apparent brightness). The triangle does not cover the entire range that can possibly be seen by the human eye. Hence, when you see colors on a TV they sometimes do not look as good as they do when printed. Blues are especially hard to reproduce on monitors. If you are looking at this on a monitor there will not appear to be much difference in the blues. However, if you were looking at this diagram printed, the difference would be more apparent.

The numbers around the circumference refer to the wavelength (color) of the light in nanometers.

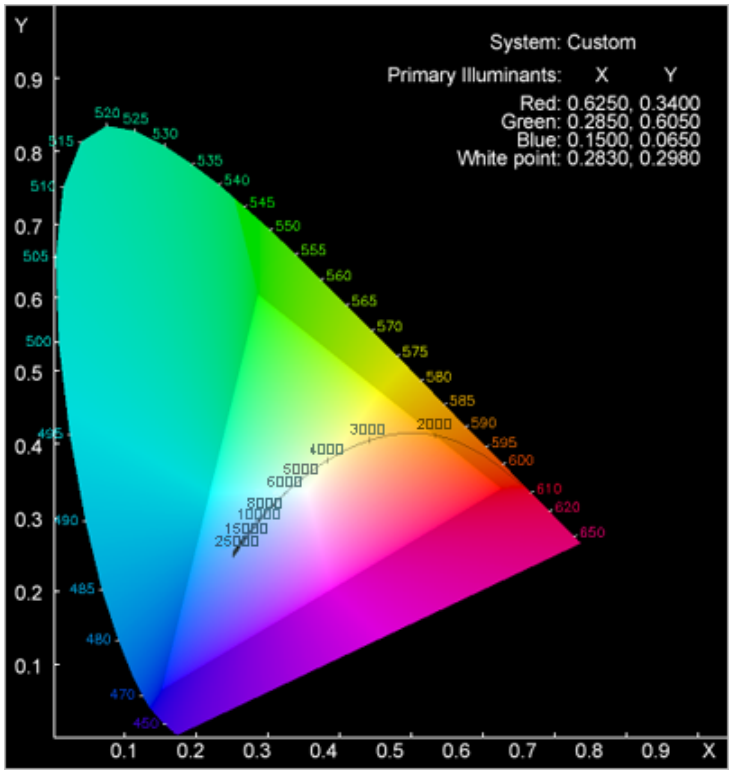

Chromaticity diagram: Colors seen by the human eye

Copyright © Right Hemisphere 2007. All Rights Reserved.

If you were outside looking up at the sky you would see many different white points, ranging from 10,000K to 5000K depending on where you were on the planet and which direction you were looking; so we standardize on these black body radiation values and we take northern hemisphere averages to use as reference points. So normal daylight is judged to be 6500K, even though it almost certainly is not where you are.

HDRI and White Point

So, how do we identify a normal exposure range for information in an HDR image? That is, what number corresponds to white?

As stated previously, white in a tone-mapped image is easy; it's the maximum value possible. Measuring the maximum value would be very difficult in an HDR image, as we do not know where to define it. The maximum number is extremely bright and does not really relate to 'white'. We can avoid the problem in a clever way by defining where mid-gray is. This is easier because we can measure it. We can take a gray card (photographic standard of 18% white as measured by a densitometer), put this card in a scene, take an HDR image of it, measure the pixel values, and say this is 18% gray. Then we can define a value that this represents in the image and scale the image so that the value is equal to the value on the gray card.

The OpenEXR (.exr) format has made this simple. The value chosen is 0.18. Therefore, a measured 18% gray card should have a value of 0.18 in an HDR image.

In practice, two things can be obtained from such a measurement. One is the 18% point; the second is the color balance. All three component colors (RGB) should be equal for gray objects, so we can also adjust the curves as required to make this even.

Copyright © Right Hemisphere 2007. All Rights Reserved.

Plugin Manager

Menu bar > Tools > Plugin Manager

The Plugin Manager is a utility that lists the following information:

- Plugins.
- Plugin versions.
- Import and export settings, where appropriate.
- Plugin conflicts.

It is used to view current plugins and files, establish import and export settings, and resolve plugin conflicts.

Plugin conflicts are highlighted in orange on the File Formats tab.

Note: Menu options for the Plugin Manager are not available on the slave computers.

Procedure

To open the Plugin Manager:

Choose Tools > Plugin Manager on the menu bar.

Plugins Tab

Menu bar > Tools > Plugin Manager > Plugins tab

The Plugins tab displays the plugin name, version, description, status, size, the supported import and export formats, and the plugin extensions.

When Deep Exploration starts for the first time, the status of each plugin is listed as 'loaded' and a system file is created that informs Deep Exploration which plugins are used. Whenever the application is started again, this file is used to reference the plugins that are used so that the application opens without delay, and the status of each existing plugin is listed as 'defer'.

From this point, only new plugins and the plugins that you select to view in the application are listed as loaded indicating that:

1. New plugins have yet to be added to the system file for future reference.
2. The plugins selected for viewing have been loaded into the application.

Interface

Import/Export Filters—Displays the file formats that are associated with the selected plugin.

Extensions—Displays the extensions that are associated with the selected plugin.

File Formats Tab

Menu bar > Tools > Plugin Manager > File Formats tab

The File Format tab displays a list of formats with various information including the format name, extension, type, whether files are import and export in nature, and their related plugin.

Copyright © Right Hemisphere 2007. All Rights Reserved.

The tab is used to resolve any plugin or format conflicts (highlighted in orange), and modify and restore the default import and export properties. You can also move the format rows up and down within the list to view any plugin or format conflicts more easily.

Most file extension conflicts are resolved automatically; if one plugin cannot load a file with the supported file extension, the other plugin tries to load the file.

Procedures

To resolve plugin or file format conflicts:

Clear the relevant plugin or format check box. The file format is not loaded when you next start Deep Exploration.

To move a row in the list:

1. Click the row in the File Formats list.
2. Click the **Up** or **Down** buttons to move the row to the location you require.

To restore the default import and export properties:

Click **Defaults**. All default format settings including the default import and export settings are restored.

To modify the import and export properties:

1. Select the format for which you want to modify import or export properties.
2. Do one of the following:
   - Click the **Import Settings** button to modify the import properties (on page 40).
   - Click the **Export Settings** button to modify the export properties (on page 55).

   Note: These buttons are only enabled for formats that can be imported and/or exported.
3. Make the selections you require.
4. Click **OK** twice.

Interface

Up—Moves the selected row up one level in the formats list.

Down—Moves the selected row down one level in the formats list.

Reset—Restores the rows to their original order.

Defaults—Restores the default settings of the selected format.

Import Settings—Used to open the selected format's Import Properties dialog and modify the import properties.

Export Settings—Used to open the selected format's Export Properties dialog and modify the export properties.

Copyright © Right Hemisphere 2007. All Rights Reserved.

Primitives and Modifiers

Create Menu > Create Primitive
Create Menu > Modifier
Select object in scene > Right-click viewport > Modifier

Using primitives (preset 3D objects) and modifiers, you can add complex models with your scene. Primitives are meshes and can have open surfaces. These primitives and other objects belonging to the model can be modified using various modifiers (modifiers) to create a more complex model. You can add many different primitives to scenes including cones, stars, spiral stairs, spheres, capsules, pyramids, gears, and archways.

Primitives are extremely helpful when wanting to create additional geometry to replace simple missing parts and complete a scene.

Modifiers provide many different ways to modify existing objects while keeping the file size to a minimum. You can also edit individual primitives and modifiers (on page 337) in the same way as all other objects. For example, normally, you want the center of the Inflate modifier to be a point somewhere in the midst of the object and radius to be the distance of the furthest vertex from center. However, you can change the center anchor of the Inflate modifier object to achieve different effects.

Note that character primitives can be created when importing certain files into Deep Exploration. For example, .dwf files.

Procedures

To create a primitive:

1. Open a 3D file (on page 39).
2. Click the Create Primitives down arrow.
3. Click the primitive you want to add.

The primitive is added to the scene immediately

To apply an modifier:

1. Open a 3D file.
2. Select the objects to which you want to apply the modifier.
3. Click the Create Modifier down arrow.
4. Click the modifier you want to apply.

To delete a primitive:

1. Do one of the following:
   - Select the primitive in the viewport and press DELETE.
   - Right-click the primitive in the viewport, 3D Objects list, Parts panel, or Layers panel, and then click **Delete Objects**.
   - Open the Object Properties dialog (on page 335), click the Object tab, select the primitive in the Object window, and then click **Remove**.

To delete an modifier:

1. Open the Object Properties dialog and click the Object tab.
2. Select the modifier in the Object window.
3. Click **Remove**.

Copyright © Right Hemisphere 2007. All Rights Reserved.

Publishing Web Pages

File > Save As > Select .html type
File > Batch Operations > Convert 3D Files > Select .html type
Right-click the folder and choose File > Batch Operations > Convert 3D Files > Select .html type

2D and 3D files can be saved as individual Web pages and then viewed in detail. Any 3D content can then be panned, rotated, and zoomed.

Files can be published in various formats and with various export options applied depending on the format you select. For example, if you save to the HTML Document with 3D format (on page 493), you can choose to compress the files, export animation, and export skins. If you choose to save to the Shockwave Web page format (on page 526), you can choose to compress the files and textures.

You can choose to publish tot he .html format either by saving single 3D files (on page 55) or by batch converting multiple 3D files (on page 252).

HTML Publish Rules

Certain rules apply to publishing to the .html format:

- Deep Publish (http://www.righthemisphere.com/deeppublish) or Deep View (http://www.righthemisphere.com/deepview) is required for viewing 3D content in a Web page. If you do not have Deep Publish or Deep View installed on your computer, the first time you publish to the HTML Document with 3D .html format, you must install the Deep View 'deep.cab' file. The Default Rendering Mode dialog then displays a list of the available display renderers for the graphics card that is installed on your computer. The display renderer determines how scenes are rendered while you work, and the best renderer for your graphics card is automatically detected as the default. We recommend using the default renderer, however, you can change it (on page 259) if you require.
- By default, Microsoft Windows Server 2003 is configured to recognize a set of file types. Files that are published to the .html format can only be read by a Web site if the .rh file type is added to this set. please see your Microsoft Windows Server 2003 Help for information on how to do this.

Copyright © Right Hemisphere 2007. All Rights Reserved.

Realight Tool

Menu bar > View > Controls and Toolbars > Realight
Right-click menu bar > Realight
Customize Layout dialog > Toolbars tab > Select Realight > OK

The Realight tool is used to simulate global illumination utilizing the ambient occlusion technique, to render models as if they are surrounded by a dome of light. The tool simulates self-shadowing and makes models appear more realistic, and is especially useful for rendering models that lack texture, lighting, and bump, etc. For example, CAD models.

Ambient occlusion is a lighting technique that looks at many points on the surface of a model and estimates the occlusion of each point by the objects around it. That is, how accessible the point is to the ambient light. For example, a point on an exterior surface is more accessible that a point in a crevice, therefore it will receive more light. As the point in the crevice is less accessible, the shading becomes darker.

You can choose to store the ambient occlusion as vertex colors or as texture maps. Vertex color storage can be helpful for high density polygon models, whereas it is better to store illumination as texture maps for models with smooth surfaces and low polygon density. Any illumination that is stored as texture maps can only be applied to objects that have UV mapping (on page 198).

Additionally, both vertex colors and texture maps can be used to store the illumination.

If you use the texture maps storage option, you can reduce the incidence of artifacts by increasing the size of the maps, or by increasing the Prefilter, Noise, and Blur values. You can also decrease artifacting by rendering using vertex colors, although this can increase rendering time.

Note: The Realight tool is for use mainly on static objects and not animated objects.

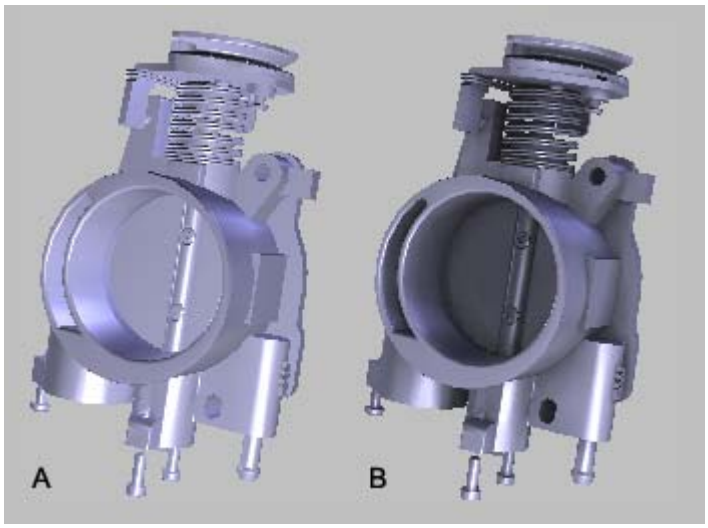

A: Without Realight illumination / B: With Realight illumination

Procedure

To perform Realight mapping:

1. Open a 3D file (on page 39) that has been UV mapped.
2. Click **Realight**  on the Realight toolbar.
3. Make your selections as required and click **OK**.

Copyright © Right Hemisphere 2007. All Rights Reserved.

Realight Settings

Realight toolbar > Realight

The Realight tool includes a number of settings that are used render models with ambient occlusion illumination.

Interface

Ambient Occlusion—Used to establish general settings for the ambient occlusion.

- **Store as vertex colors**—Stores the ambient occlusion as vertex colors. UV coordinates are not required for this option.
- **Store as texture maps**—Stores the ambient occlusion texture maps. This is better for smooth surface and low polygon density objects. UV coordinates are required for this option. Note that only the UV coordinates within the range (0,0)-(1,1) are rendered.
- **Calculate part-by-part**—Stores the ambient occlusion, part-by-part.
- **Rays per sample**—The number of per vertex or per sub-pixel surface samples. That is, the rays that are cast from each of the surface vertices in vertex color mode, or sub-pixels in texture maps mode. The level of ambient occlusion is determined by the average result from the total number of rays cast for each sample. The higher the value you enter, the more rays are cast and so, the more accurate and smoother the rendered output. Note that higher values slow down the processing speed.
- **Maximum distance**—The maximum allowable distance for realight rendering.
- **Brightness**—Determines the level of brightness of the ambient occlusion.

Texture Maps—Used to establish settings for the texture maps.

- **Map Generation—**Used to establish the method for generating texture maps.
  - **Scheme**—Used to select the source from which maps are generated.
    - **Existing materials**—Generates maps based on the organization of existing materials. For example, if an object comprises two materials that use the same texture map, two maps are created. Note that using this option can result in unnecessary map space and poor use of memory.
    - **Existing diffuse maps**—Generates maps based on the existing diffuse map organization. For example, if an object comprises two materials that use the same texture map, only one map is created. We recommend using this option only if the UVs have been packed with the UV mapping tool (on page 198). Note that if you select this option and the materials do not contain any maps, the maps are generated using the existing materials.
  - **Outcome**—Used to select the manner in which maps are generated.
    - **Replace diffuse map**—Replaces the existing diffuse maps with new ones. The new maps are based on the width and height of any existing maps. This option uses slot 1 of the material's maps.
    - **Merge into diffuse map**—Merges the new diffuse maps with the existing ones. This option uses slot 1 of the material's maps.
    - **Add new AO light map**—Adds a new light map to the materials. This option uses slot 10 of the material's maps.
- **Map Properties**—Used to establish settings for the new texture maps.
  - **Samples**—The number of per sub-pixel surface samples. That is, the rays that are cast from each of the map's sub-pixels. These determine the amount of antialiasing to apply to the maps. For example, if you enter a value of 2, each pixel is divided into two and a ray is cast from each sub-pixel. Note that higher values slow down the processing speed.

Copyright © Right Hemisphere 2007. All Rights Reserved.

- **Noise**—Applies white noise to the texture map. The higher the value, the more noise applied.
- **Prefilter**—Applies color bleed around the polygon groups. The higher the value, the more bleed is applied reducing the number of artifacts. Note that if you enter a value of 0, seams may be visible on the model.
- **Blur**—Applies Gaussian blur to the texture map. The higher the value, the more blurring applied. This can be helpful in improving illumination if you enter a low 'sample' value.
- **Same size for all maps**—Used to create all maps with the same size.
  - **Width**—The width of the maps in pixels.
  - **Height**—The height of the maps in pixels.
- **Calculate proportional maps**—Used to create maps based on the maximum dimension of the largest object.
  - **Maximum dimension**—The maximum dimension of the largest map that is applied to the largest object, in pixels. The maximum dimension of all other maps is then calculated proportionally based on the remaining objects' size. Therefore, the width or height of all other maps is equal to, or less than this dimension. This can be helpful in conserving texture space.
  - **Round size to a power of two**—Rounds up the maximum width and height values to the closest power of two. For example, if you enter 500, it is rounded up to 512. This option should be used if your graphics card is optimized for a power of two.
- **Save as internal image**—Saves the texture maps in the internal application memory.
- **Prefix**—The prefix to append to the new map names. This is helpful to identify any new maps that are created.
- **Path**—The location in which to save the maps.
- **Format**—The format in which to save the maps.

Ground Plane—Used to establish the settings for the virtual ground plane.

- **Use virtual ground plane**—Uses a virtual ground plane to calculate the illumination. Any rays that are cast from the bottom of the model collide with this plane to cast shadows on the underside of the model. The closer the ground plane is to the model, the darker the shadows.
  - **Distance**—The distance between the model and the ground plane.
  - **Size**—The percentage size of the ground plane compared to the size of the model.

Defaults—Resets all settings back to the default values.

OK—Closes the dialog and applies the settings. Any changes made to the settings are saved.

Cancel—Cancels the process and closes the dialog. Any changes made to the settings are lost.

Help—Opens the relevant Help topic.

Warning

This function will essentially double the size of your model which may create performance problems and will affect downstream materials applications including Realight rendering and raytracing. If you are having problems with inverted normals and or faces, we suggest you consider the following alternatives in this order of preference:

1. Use the Unify Normals function.

2. Use the Unify Normals function with "Apply to polygons" checked.

Copyright © Right Hemisphere 2007. All Rights Reserved.

3. If the above tools do not provide the desired solution automatically then try manually flipping faces and or normals. You may need to "Separate Meshes" first and then collapse the hierarchy of separated meshes when you are finished.

4. If the result is to be played back in a Right Hemisphere Viewer product such as Deep Exploration, Deep Publish or Deep View then ensure rendering is set to show back-facing with <Ctrl> H. The default is render back-facing in Deep View and Publish.

5. Setting the Materials to Render double sided.

Note: Options 4 & 5 will not allow Realight Lighting to work correctly.

Copyright © Right Hemisphere 2007 All Rights Reserved.

Rendering Scenes

Menu bar > Render > Renderer Properties
Menu bar > Rendering toolbar > Rendering Properties
Menu bar > Rendering toolbar > Render

Scenes can be rendered using a number of different methods:

- Via the Render menu (on page 265) or Rendering toolbar (on page 378) to render the scene to a saved file, to the viewport or a separate window, as either a series of still images or video clip.
- Using batch operations (on page 251) to render multiple files.
- Via the Illustration tools (on page 162) to render to raster or vector output, including rendering callouts (on page 137).

Before you render a scene, you can modify the scene in many ways to create the 'look' that you want. For example, you can apply various render modes.

Both the Render menu and Rendering toolbar can be used to select a renderer (on page 259), set the renderer properties (on page 268), and to specify the destination to which to render or save the file. A number of additional renderer properties can be set using the Render Tab (on page 292).

In this topic, we describe how to render scenes using the Render menu or toolbar.

Decreasing Rendering Time

A number of methods can help to reduce render times:

- Object instancing (on page 99).
- Using the Level of Detail controls (on page 325).
- Using the 3D Tools menu (on page 278) to remove degenerate triangles, duplicate faces and materials, and duplicate meshes.
- Enable the 3GB switch (on page 445) for processing very large files.

Procedure

To render a scene directly:

1. Open a 3D file (on page 39).
2. Do one of the following:
   - Choose **Render > Renderer Properties** on the menu bar.
   - Click the arrow on the Rendering toolbar and then click **Renderer Properties**.
   - Click **Render** on the Rendering toolbar. The scene is rendered immediately with the current renderer properties settings.
3. If you chose to display the render properties, select the options you require, and then click **Render**. The model is rendered either in the viewport or in a separate window (on page 268) depending on your selection. If you chose to leave the Render Statistics window (on page 270) open, the Rendering dialog displays the render statistics.

   Note: At any time you can click Cancel to close the dialog and cancel the render process. You can also click Help at any time to open the Help reference system.
4. If you selected to display the render statistics, click **Close** to close the dialog after the rendering is complete.
5. Click **OK**. If you are using the Raster Illustration tool with the raster mode 'To File', the Save As dialog is displayed. Otherwise, the Properties dialog is closed.

Copyright © Right Hemisphere 2007. All Rights Reserved.

6. If the Save As dialog is displayed, browse to the required save destination, enter a file name, select a file type and click **Save**. The file is saved.

Note: You can use the Save As dialog to modify certain application options (on page 248) including resolution and time output.

Rendering to File

Menu bar > Render > Render to File
Menu bar > Rendering toolbar > Render to File

Scenes can be rendered to one of a number of 2D formats and saved to a location of your choice using the Render To dialog (on page 266). If the current 3D file is animated, animation options can also be set including saving the file as a single image or as a number of images.

Note: Scenes can also be rendered to file via the Illustration tools (on page 162).

Procedure

To render a scene to file:

1. Open a 3D file (on page 39).
2. Do one of the following to display the Render To dialog:
   - Choose **Render > Render to File** on the menu bar.
   - Click the arrow on the Rendering toolbar and then click **Render to File**.
3. Browse for the directory where you want to save the file.
4. Enter a name for the file.
5. Select the format in which you want to save the file.
6. Do one or more of the following:
   - Click **Settings**, modify the export properties (on page 55) as required, click **OK**, and then click **Save**.
   - Choose **Render > Settings**, modify the renderer properties (on page 268) as required, click **OK**, and then click **Save**.
7. Click **Save**.

Copyright © Right Hemisphere 2007. All Rights Reserved.

Rendering to Multiple Images and Video Clips

Menu bar > Render > Auto Fly-Around
Menu bar > Rendering toolbar > Auto Fly-Around

Animated scenes can be rendered as either a series of still images or as a video clip, and saved to a location of your choice using the Render Auto Fly-Around dialog (on page 267). The images or video are created as if the camera is flying around the entire scene.

Procedure

To save a file as images or as a video:

1. Open the animated file that you want to save as still images or as a video.
2. Do one of the following:
   - Choose **Render > Auto Fly-Around** from the menu bar.
   - Click **Auto Fly-Around** from the menu bar.
3. Browse for the directory where you want to save the file.
4. Enter a name for the file.
5. Select the format in which you want to save the file.
6. Do one or more of the following:
   - Click **Settings**, modify the export properties (on page 55) as required, click **OK**, and then click **Save**.
   - Select the number of image files or video frames in the Number of frames field.
   - Select the vertical camera deviation in the Vertical deviation field.
   - Click **Preview** to preview the file if required.
   - Choose **Render > Settings**, modify the renderer properties (on page 268) as required, click **OK**, and then click **Save**.
7. Click **Save**. The images or video are saved to the selected destination.

Copyright © Right Hemisphere 2007. All Rights Reserved.

Slide Shows

Menu bar > Standard toolbar > Slide Show

You can create and present slide shows presentations in the viewport.

Procedures

To create a slide show:

1. Place the images for your slide show in a folder of your choice.
2. From the Folders panel (on page 300), click the folder where your slide show images are located.
3. Open the Options dialog (on page 280) and use the Slide Show tab to configure the slide show settings.
4. Click **Slide Show**  on the Standard toolbar.

The slides are automatically displayed in the viewport for the selected number of seconds.

To manually advance slides:

Press the space bar or use CTRL+RIGHT ARROW.

To stop a slide show:

Press CTRL+LEFT ARROW or ESC on your keyboard while the slide show is in progress.

Copyright © Right Hemisphere 2007. All Rights Reserved.

Shaders

File list > Shaders tab

In 3D computer graphics, a shader is a program used to determine the final surface properties of an object. For example, a shader can define the color, reflectivity, and translucency of a surface. The most common use of shaders is to determine the final color of the object. Shaders can also be used to manipulate the object's position.

There are two types of shaders:

- **Vertex shaders**: Usually used for computing vertex position, vertex color, and vertex normal, etc. They can be emulated by your CPU. That is, if you have an NVIDIA Riva TNT graphics card, you can still see vertex shaders.
- **Pixel shaders**: Also called 'fragment' shaders. Pixel shaders are used to shade the model and can produce interesting visuals. These cannot be emulated and are only supported by cards such as GeForce 3, GeForce 4 (not GF4 MX), and newer ATI Radeons.

> Note: All shaders that are written in either Cg, HLSL (DirectX 9.0's High Level Shading Language), or Assembler language are supported. Please see the Microsoft DirectX Web page (http://www.microsoft.com/windows/directx/) for further information.

Shader (.fx) files are displayed in the Shaders tab (on page 389) within the File list. When you select a .fx file in the Shaders tab, a built-in 'teapot' model is created and displayed in the viewport shaded with the selected shader. You can also drag shaders onto objects. Shaders are attached to materials; when you drag a shader onto an object, other objects may also appear shaded. Shaders can also be edited using the Shader toolbar or via the Shader tab within the Material Properties dialog.

Shaders are delivered with Deep Exploration. For example, the wood.fx and cellophane.fx shader files.

Note that shader information can be saved within .rh files (on page 523).

Important Notes

- If incorrect information is displayed when you drag a .fx file onto a model, ensure the following requirements have been met:
  - Either an ATI Radeon Card with 9800 or later chipsets, or an NVIDIA Gforce 4 graphics card or later chipsets.
  - DirectX 9.0 (http://www.microsoft.com/windows/directx/) must be installed on your computer.
  - You must be using the DirectX 9.0 display renderer (on page 259). Otherwise, either the default material is displayed, or the texture is displayed if a shader uses textures.
  - The 'Use alpha channel in 32 bpp images' (on page 294) option must be active for all shaders that use 32-bit textures.
- You may not be able to see all the shaders automatically even if you have the latest graphics card.
- Each modern graphics card supports a certain level of pixel shader capability. For example:
  - NVIDIA GeForce4 supports version 1.2.
  - NVIDIA GeForce FX supports 2.0.
  - ATI Fire GLX 1 supports 1.4.
- As version numbers have increased, so have the complexity of the shaders. For example, the Wood Shader requires version 2.0 of the pixel shader capability. For cards without this feature only a gray surface is displayed in the viewport, and a yellow warning triangle is displayed in the status bar. Double-clicking the warning triangle displays information relating to the shaders in the Export Log dialog.

Copyright © Right Hemisphere 2007. All Rights Reserved.

Note: These are all aspects that relate to the pixel shader capability of specific graphics cards.

Procedures

To add a shader to a model:

Drag a shader from the Shaders tab in the File list into the scene.

To edit a shader:

1 Select the object (on page 88) for which you want to edit the shader.

2. Open the Material Properties dialog (on page 350) and click the **Shading** drop down.

3. Make your selections as required and click **OK**.

Important Note - Editing shaders

Colors and Parameters

If you have selected the standard shader for your model you will be able to edit colors, glossiness, specular level etc. However, if you have chosen a real-time shader it will only be possible to edit colors by adjusting the ambient light, surface color and light color by choosing a color from the color selector. Various other options can also be set, in the Parameters section, using the sliders alongside each item.

Copyright © Right Hemisphere 2007. All Rights Reserved.

Steps

Menu bar > View > Controls and Toolbars > Steps
Right-click menu bar > Steps
Customize Layout dialog > Controls tab > Select Steps > OK

Just as model views emulate the properties of schematic diagrams, 'steps' can emulate sequences of instructions. Each step has a label and arbitrary text, and comprises a number of user-defined animated sequences that are displayed when you play the step.

Various step metadata information can be displayed in PDF documents using the PDF Publishing Module (on page 223).

Steps are helpful for including 3D-view instructions in files, such as PDF files. They are based on the current view of the scene. Each step has an associated camera, render mode, and layer. The associated layer comprises the currently visible objects, including visible callouts and measurements. Steps are displayed in the Steps panel (on page 359) in the form of a thumbnail for each step.

The thumbnail that is displayed is the last frame of the last animation defined in the sequence list for each step. If an animation is modified, the step thumbnail can be updated.

When you select a step:

- The active viewport is set to the associated camera and render mode.
- The objects in the associated layer are made visible.
- All objects that are not associated with the step become invisible.

The Steps panel is used to create, activate, reorder and delete steps. Using the right-click menus (on page 420) you can also modify the step properties (on page 361) including defining the instructional text, and linking the step to multiple animations.

If you are using multiple viewports (on page 63), different steps can be used in each viewport. For example, you can display a step in one viewport, a 27 Isometric RBA view in another, and a perspective view from the top in yet another. The viewport label displays the current view in each viewport.

Step descriptions can be used to display the step's metatdata content (on page 196) in PDF documents using the PDF Publishing Module (on page 223).

Procedures

To create a step:

1. Modify the scene view as you require.
2. Open the Steps panel (on page 359).
3. Click **Options**  in the Steps panel toolbar.
4. Make your global selections as required and click **OK**.

   Note: Your settings are applied to all new steps until the options are next modified.

5. Click **Create**  on the Steps panel toolbar.
6. Enter a name and description for the step.
7. Select the sequences you want to add to the step in the 'Available sequences' list and click **Add**.
8. Click **OK**.

Copyright © Right Hemisphere 2007. All Rights Reserved.

To edit the step properties:

- Right-click the step you want to edit in the Steps panel, and then click **Properties**.
- Edit the step as required and click **OK**.

To play a step, do one of the following:

- Double-click the step in the Steps panel.
- Select the step in the Steps panel and click **Forward** .
- Right-click the step you want to play in the Steps panel and click **Forward**.

To stop playing a step:

- Click **Stop** . The step that is currently playing stops.

To reset a step:

- Click **Reset** . The step that is currently active is reset to its saved position (first frame).

To delete a step, do one of the following:

- Select the step you want to delete in the Steps panel and click **Delete** .
- Right-click the step you want to delete in the Steps panel and click **Delete**.

To edit step properties:

1. Right-click the step in the Steps panel and click **Properties**.
2. Modify the name and description of the step if required.
3. Do one or more of the following:
   - Select the sequences you want to add to the step in the 'Available sequences' list, and then click **Add**.
   - Select the sequences you want to remove from the step in the 'Current sequences' list, and then click **Remove**.
   - Select a sequence and click the **Up** or **Down** buttons to move the sequence to the location you require.
4. Click **OK**.

To switch between a thumbnail and a detailed view:

Click **Thumbnails**  on the Steps panel. If the list was displayed in a detailed view, thumbnails are displayed. If the list was displayed as thumbnails, a detailed view is displayed.

To sort the steps:

1. Right-click a step in the Steps panel and click **Sort**.
2. Do one of the following:
   - Click **By Name** to sort the list by the step name.
   - Click **By Creation Time** to sort the list by the time at which the step was created.

Copyright © Right Hemisphere 2007. All Rights Reserved.

3. Do one of the following:
   - Click **Ascending** to sort the list in ascending order by name or time depending on your selection.
   - Click **Descending** to sort the list in descending order by name or time depending on your selection.

To manually reorder the steps by using drag and drop:

- Click and hold a step in the Steps panel, and drag it to the required location in the list.

To update a step and its thumbnail:

- Right-click the step you want to delete in the Steps panel and click **Update Step**.

Steps Metadata

Step metadata is designed specifically to create content for use with various step controls (on page 232) in the PDF Publishing Module (on page 223), in order to display that content in PDF documents.

The metadata content is specified in the Description field of each step's properties (on page 361). This field can comprise two separate metadata tags, a metadata keyword, and the metadata content itself.

The two metadata tags comprise keys and corresponding content that are referenced by some of the RH step controls:

- ##global_metadata##—The content is common to the entire file. You can add this tag to any step within a file. However, for best practice we recommend adding it to the first step.
- ##step_metadata##—The content is specific to the current step.

The following example shows a step description that contains the global metadata tag, the step metadata tag, metadata keys, and related content for each keyword.

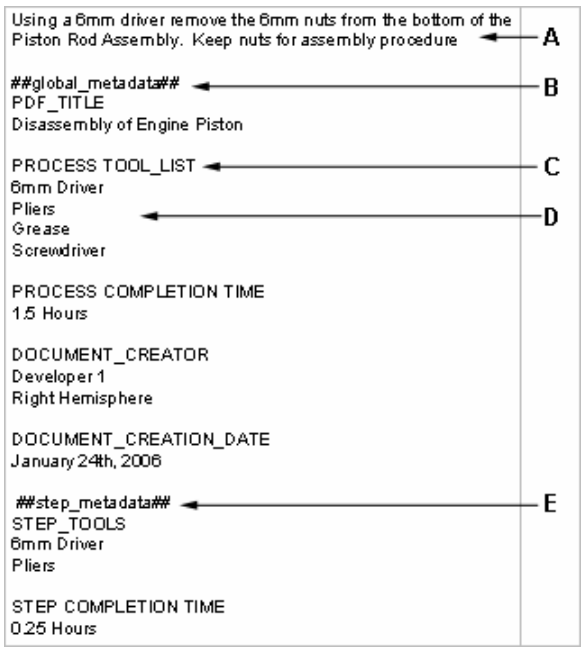

A: Step description
B: Global metadata tag
C: Keyword
D: Content
E: Step metadata tag

Copyright © Right Hemisphere 2007. All Rights Reserved.

Metadata Rules

- Text located before the global metadata tag is the step's description.
- The first line after the global tag, step tag, or an empty line is a keyword.
- Keys can be only one line.
- Text immediately below each keyword is that keyword's corresponding content.
- The content for each keyword is ended by an empty line.
- Keys can be user-defined, provided the same name is used in PDF Publishing. There are also four standard keys that you can use. They are:
  - **PDF_CAMERA_MODE**—Sets the camera to 'Walk' mode or 'Pan' mode, depending on step metadata content.
  - **PDF_LAYERS_SET**—Shows only this layer and hides all others.
  - **PDF_LAYERS_SHOW**—Shows layers, without hiding any currently visible layers.
  - **PDF_LAYERS_HIDE**—Hides layers, without showing any currently hidden layers

Copyright © Right Hemisphere 2007. All Rights Reserved.

UV Mapping

Menu bar > View > Controls and Toolbars > UV Mapping
Right-click menu bar > UV Mapping
Customize Layout dialog > Toolbars tab > Select UV Mapping > OK

UV mapping is a means of mapping a texture image to a 3D model. Given a texture (.jpg, .gif, etc.), the UV map allocates portions of the image to specific faces on the model. Often the default mapping is not optimal, and results in the image not lying on the model in the most useful way. Additionally, 3D objects that are VAMP-mapped may have many seams and overlaps that can make texturing difficult within most applications.

The UV Mapping tools allow you to apply UV mapping coordinates to selected objects to prepare them for further modification in Deep Exploration. For example, once you have mapped a model, you can then use the Realight tool to simulate global illumination. The mapping tools are also used to 'pack' UVs. Packing arranges UVs so that they fit efficiently onto a texture map and take up as much of the texture space as possible. The 'relax' and 'knead' options allow you to remove distortion from a model by spreading out the faces so that small faces are more prominent, making the model much easier to texture. Relaxing evens up the distribution of polygons on the map to make a model more evenly covered by the map.

In addition, you can map by 'element'. An 'element' is a group of connected faces in an object that is not connected to any other faces in the object. Certain types of models may be made up of multiple elements. The UV Mapping tools normally break an object up into mappable chunks based upon the angle between adjacent faces. The "Map By Element" option prevents the UV Mapper mapping across an element boundary. Because element boundaries are also sensible places to break up the UV mapping, using "Map By Element" can sometimes produce a better mapping for models.

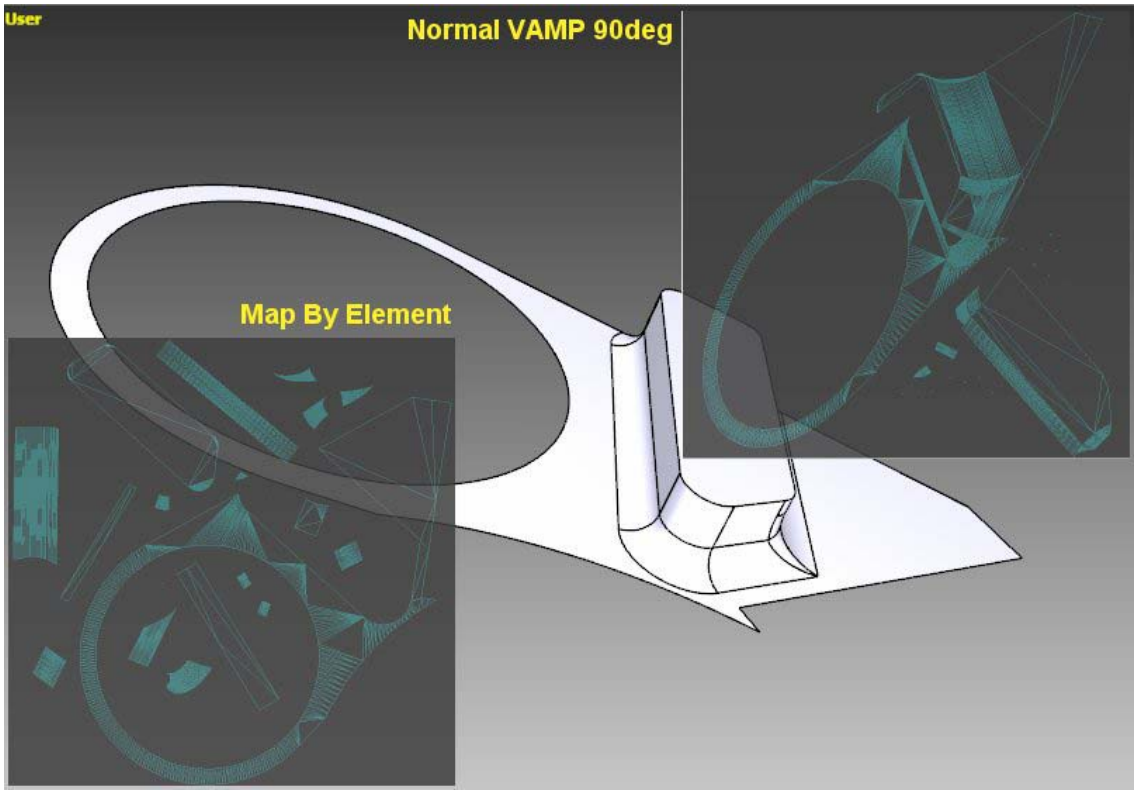

Model showing normal VAMP UV mapping and mapping by element

Copyright © Right Hemisphere 2007. All Rights Reserved.

The Pack tool is used to pack the polygon's existing UVs using the settings established in the UV Mapping Settings dialog. The Clump packing method can be used to pack the UVs multiple times until you achieve a useful result, as this method produces a different result each time a pack is initiated. If you use the Rectangular or Simple packing methods, you need only pack the UVs once as the same results are produced each time.

Note: The Pack tool does not map any new UVs.

The Map, Relax and Pack tool is used to map the polygons into UV space, relax if required, and then pack the resulting UVs, all in one operation.

The settings in the UV Mapping Settings (on page 199) dialog determine how objects are mapped, how the UVs are packed, and whether relaxing of polygons is required.

Procedures

To map, relax and pack UVs:

1. Open a 3D file (on page 39).
2. Click **Settings**  on the UV mapping toolbar.
3. Make your selections as required and click **OK**.
4. Select the objects for which you want to map and relax.
5. Click **Map, Relax and Pack** .

The UVs are mapped to the selected objects.

To pack or repack UVs:

1. Open a 3D file (on page 39).
2. Click **Settings**  on the UV mapping toolbar.
3. Make your required Packer selections and click **OK**.
4. Select the objects for which you want to pack.
5. Click **Pack** .

The UVs are packed. Note that if you choose clump packing, the results are different every time you repack.

To relax and pack UVs:

1. Open a 3D file (on page 39).
2. Select the objects for which you want to relax and pack.
3. Click **Relax and Pack** .
4. Make your relaxer selections as required and click **OK**.

The UVs are relaxed and packed. Note that this option does not remap UVs.

Copyright © Right Hemisphere 2007. All Rights Reserved.

UV Mapping Settings

UV Mapping toolbar > Settings

The UV Mapping Settings dialog is used to select the type of UV mapping, relaxing and packing to apply to the selected objects. You can establish a number of settings for each type including the tolerance angle for VAMP mapping and whether to preserve UV orientation when packing UVs. You might want to do this if you require all the bricks to be stacked in a particular way, for example, horizontally.

In addition, if a model is densely packed, you can establish relaxing options to provide more detail in the densely packed areas. Relaxing unfolds the selected UVs to minimize distortion and smooth UVs within the selected area.

Procedure

To open the UV Mapping Settings dialog:

Click **Settings**  on the UV Mapping toolbar.

Interface

Mappers—Used to select the type of UV mapping to apply to the selected objects.

- **VAMP**—Variable Angle Multi-Planar Mapping. Applies a local-planar map to groups of polygons, it directly maps objects using the VAMP tolerance angle. This option is best for complex geometry. We recommend using this method for organic and CAD models. If the model is made from Nurb patches, it is also useful to select “map by element”.
- **Cube**—Finds the axis closest to the polygons' normals and maps them onto the perpendicular plane. That is, it places a cube around each object and maps the section of each object that is closest to a cube side. We recommend using this method for CAD models.
- **Rigid**—Unfolds each object to map the UVs. That is, if the UVs were printed onto a piece of paper, you could fold it into the shape of the object. This helps to minimize distortion, but may not unfold each object in quite the same way that a person would.

Packers—Used to select the method of packing the UVs.

- **Clump**—Packs the UVs into a 'clump' in the middle of the UV map. UVs are placed in any available space within the clump, including empty areas within other UVs. For example, if part of a UV map contains an internal hole, a section that does not contain UV mapping, small UVs are placed in this hole. We recommend using this method for most models.

  Note: This packing method produces a different result each time you re-pack the UVs.

- **Rectangular**—Packs the UVs in a rectangular pattern. We recommend using this method for simple models that you may be painting by hand.
- **Simple**—Packs the UVs in a simple pattern. That is, in rows, from the smallest to the largest UV.

  Note: This method may not be the most efficient use of pixel space on a map.

Relaxers—Used to provide more detail in a densely packed model.

- **None**—Relaxing is not required.
- **Knead Even**—Smoothes UVs evenly.
- **Knead Aligned**—Smoothes UVs by aligning them flat with the map.

Copyright © Right Hemisphere 2007. All Rights Reserved.

- **Knead Hybrid**—Smoothes UVs using a combination of kneading evenly and alignment.
- **Relax**—Adjusts the shape and size of the selected polygons to match the model geometry.

Mapping Options—Used to select whether mapping will occur by element.

- **Map by Element**— Prevents breaking a map across an element boundary.
- **Map Channel**— Assigns a different channel number for more complex mapping. For example, different mapping on a texture (perhaps tiled) and lighting map (untiled).

Note: The default channel is 0.

VAMP Options—Used to establish the angle of tolerance for VAMP mapping.

- **Tolerance**—Determines the angle between the projection plane and the mapped polygon. For example, 0 degrees creates many small UV collections (co-planar polygons are grouped together). Whereas, 90 degrees creates fewer but larger UV collections (large partitions with distorted polygons) to create more chunky UV mapping, with more adjacent triangles.

Packing Options—Used to establish how UVs are packed using the selected packing method.

- **Fill space**—Spaces the UVs according to the selected Spacing percentage. That is, it resizes the partitions to maximize the use of the texture space of the UVs.
- **Preserve orientation**—Preserves the UV orientation of the UVs.
- **Pack per material**—Packs UVs that use the same material, separately. For example, if polygons 1 and 2 use material type A, and polygon 3 uses material B, polygons 1 and 2 are packed separately from polygon 3. Otherwise, polygons 1, 2, and 3 are packed together, sharing the same texture but retaining their own material.
- **Spacing**—Determines the spacing between the packed UVs. Usually spacing is about 0.7%. For larger maps, this value can be smaller (the pixels are smaller), but if the value is too small, pixels from one section of the map may bleed into another unrelated section.

Note: Large spaces may not be possible. For example, 10% spacing is not possible if there are a large number of UVs on a UV map. In this case, the largest possible spacing is used.

Relax Options—Used to establish further options for relaxers.

- **Iterations**—The number of times that the model is to go through the relax process. Finding more space is an iterative algorithm, so the larger this number is, the more relaxed the packing will be.

OK—Closes the dialog and applies the settings. Any changes made to the settings are saved.

Cancel—Cancels the process and closes the dialog. Any changes made to the settings are lost.

Help—Opens the relevant Help topic.

Copyright © Right Hemisphere 2007. All Rights Reserved.

UV Relax Settings

UV Mapping toolbar > Settings

The UV Relax Settings dialog comprises four 'quick' relax tools to minimize distortion by pinning the edges of the selection and relaxing the interior points.

Procedure

To open the UV Relax Settings dialog:

Click **Relax and Pack**  on the UV Mapping toolbar.

Interface

Relaxers—Used to provide more detail in a densely packed model.

- **Knead Even**—Smoothes UVs evenly.
- **Knead Aligned**—Smoothes UVs by aligning them flat with the map.
- **Knead Hybrid**—Smoothes UVs using a combination of kneading evenly and alignment.
- **Relax**—Adjusts the shape and size of the selected polygons to match the model geometry.
  - **Iterations**—The number of times that the model is to go through the relax process.

OK—Closes the dialog and applies the settings. Any changes made to the settings are saved.

Cancel—Cancels the process and closes the dialog. Any changes made to the settings are lost.

Help—Opens the relevant Help topic.

UV Remap

UV Mapping toolbar > UV Remap

UV remapping is a facility to compress multiple maps and create a single UV map. For example, some file formats do not allow multiple texture maps, or you may wish to combine several maps into a single UV mapping, so UV mapping is required prior to saving.

The UV Remap/Combine Textures dialog is used to take the mapping in one UV map and map it onto another. The settings in the dialog determine how textures are remapped, whether textures are to be combined, and how they are combined.

UV Remapping can also be used to ‘untile’ a tiled bitmap. If a tiled texture is remapped to its existing UV channel, it is replaced with a new texture which is no longer tiled but has the same visual appearance. That is, the original image is replicated many times in the new map. To preserve image detail, the new untiled texture may need to be larger than the original (up to a maximum of 1024x1024 pixels).

Procedure

To open the UV Remap dialog:

Click **UV Remap**  on the UV Mapping toolbar.

Copyright © Right Hemisphere 2007. All Rights Reserved.

Interface

Map—The name of the map.

Material—The name of the material that uses this map.

Type—The type of map. For example, diffuse, bump, ambient occlusion.

Tiled / Scaled—Indicates whether the map is tiled or scaled.

Object—The name of the object on which this map appears.

UV Channel—The number of the UV channel to which this model is applying this material.

Remap Texture—Used to select the type of remapping to apply to the selected texture maps.

- **Map**—The name of the selected map. If it is the same, tiled textures can be untiled
- **From UV Channel**—The UV channel to which the texture map currently applies.
- **To UV Channel**—The UV channel to which you want to map.

Combine Textures—Used to select the texture maps to combine, and the way in which they will be combined.

- **From texture**—The source texture map for combining.
- **To texture**—The destination texture map with the properties to combine.
- **Blend mode**—The type of combination required.
  - **Overlay**—The 'from' texture is overlaid onto the 'to' texture using the transparency channel of the 'from' texture.
  - **Multiply**—Multiply the two pixel values together.
  - **Add**—Add the two pixel values together.
  - **Average**—Calculate the average of the two pixel values.
- **Tile mode**—Used to determine how the texture is to be fitted to its new size. For example, tiled.
  - **None**—Do not tile. That is, keep the aspect ratio and ignore where this does not work. This option is ideal if both textures are the same size.
  - **Stretch**—Stretch to fit.
  - **Tile**—Tile the texture to fit.

Remap—Applies the remap texture settings. Any changes made to the settings are saved.

Combine—Applies the combine textures settings. Any changes made to the settings are saved.

Close—Closes the dialog.

Copyright © Right Hemisphere 2007. All Rights Reserved.

Bake Realight Textures

UV Mapping toolbar > Bake Realight Textures

Bake Realight Textures combines diffuse and ambient occlusion maps (generated by Realight) into one texture in the Diffuse slot. It is useful for exporting scenes to formats that do not support separate lighting maps. For example, ambient occlusion.

Bake Realight Textures affects all materials in the scene. It does the following:

- If a material has both a diffuse texture map and an ambient occlusion map, the diffuse texture is remapped to be the same size and UV channel as the ambient occlusion texture (if they are different). The two textures are combined using the multiply blend mode (on page 202), and the result is placed in the diffuse texture slot.
- For materials that have an ambient occlusion texture but no diffuse texture, the ambient occlusion texture is moved to the diffuse slot.

Procedure

To bake realight textures:

1. Open a 3D file (on page 39).
2. Click **Bake Realight Textures**  on the UV Mapping toolbar.

Any ambient occlusion maps in the scene are combined with the matching diffuse map.

Copyright © Right Hemisphere 2007. All Rights Reserved.

Gateway Module

The Gateway Module is used to quickly and easily browse for assets and derivatives (on page 205) within Deep Server databases to which you have access rights. Once the assets and derivatives are found, the user can easily download and view the files and embed them into applications using Deep Publish (http://www.righthemisphere.com/deeppublish), and update assets as required.

Gateway provides the same functionality as Deep Server Web; it standardizes how you view and communicate with Deep Server, serving as:

- A user interface for connecting to Deep Server.
- A basic browser for looking at projects and their contents in Deep Server.
- A mechanism to allow users with restricted access to get only the functionality they are allowed.

The module's interface comprises a number of components including the Gateway panel (on page 307), various Gateway tabs (on page 387), and a number of right-click menus (on page 403).

Basic Workflow

The most basic workflow used in Gateway allows you to log on to Deep Server for a single session that is controlled by the Gateway Module. As long as Gateway is open, the session remains connected, allowing you to perform several actions in Deep Server without having to log on again for each task.

Assets and Derivatives

You can use original 3D files (assets) to create and render 2D files (derivatives) with preset scene settings and a number of display elements:

- 'Asset' refers to the original 3D file. This can be a single asset, an assembly, or a part file.
- 'Derivative' refers to the file that is created manually from the original 3D file. For example, a 2D derivative that displays the model as a solid rendering with outlines overlaid on top.
- 'Base derivative' refers to the .rh file that is created automatically in Deep Server from the original 3D file.
- 'Associated file' refers to any files that is associated with an asset.
- 'Subgroup' refers to all base derivatives of the selected item's child nodes or assets.

Copyright © Right Hemisphere 2007. All Rights Reserved.

Examples

Below are some examples of 2D derivatives.

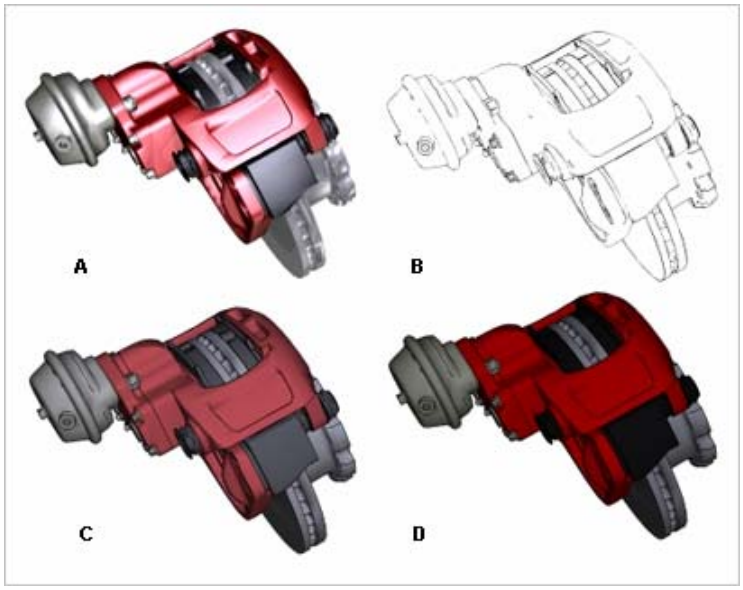

A: Optimized lighting for CAD assets
B: Line illustration
C: Variant on Shaded Illustration
D: Shaded illustration

Using Gateway

Menu bar > View > Explorer Bar > Gateway
Click current panel or list menu bar > Gateway

Once you have installed Gateway, you can use it to:

- Add and remove servers (on page 207).
- Browse multiple servers (on page 214) from a single interface.
- Browse, view (on page 214), and manage single assets, assemblies, and derivatives.
- Upload single assets (on page 209), assemblies (on page 210), and associated files (on page 215).
- View properties (on page 217) for servers, folders, and files.
- Embed assets and derivatives (on page 161) into other applications: drag and drop functionality.
- Download (on page 212) multiple assets and derivatives simultaneously.
- Cache downloaded files (on page 212) for future use.
- Verify security settings (on page 217).

Procedure

To begin using Gateway:

1. Do one of the following to display the Gateway panel (on page 307):
   - Choose View > Explorer Bar > Gateway on the menu bar.

Copyright © Right Hemisphere 2007. All Rights Reserved.

- Click the currently displayed panel or list menu bar, and then click Gateway .

You can now a add server (on page 207).

Adding, Renaming and Removing Servers

Gateway panel > Right-click in Assemblies/Assets tab > Add Server
Gateway panel > Assemblies/Assets tab > Right-click server node > Rename
Gateway panel > Assemblies/Assets tab > Right-click server node > Properties
Gateway panel > Assemblies/Assets tab > Right-click server node > Remove Server

You can add servers to Gateway. Once you have added a server, you must log in (on page 207) before you can continue with other server-related tasks such as uploading and managing assets and derivatives. However, you can rename and remove servers without logging in.

Procedures

To add a server:

1. Open the Gateway panel (on page 206).
2. Right-click in the Assemblies or Assets tab, and then click **Add Server**.
3. Do the following:
   - Enter a name for the server in the Name field.
   - Enter a URL in the Address field for the location that corresponds to the server.
4. Click **OK** to add the Deep Server.

You can now log in to the server.

To rename a server:

1. Right-click the server node in the Assemblies or Assets tab.
2. Do one of the following:
   - Click **Rename**, enter the new name, and then press ENTER.
   - Click **Properties**, enter the new name, and then click **OK**.

To remove a server:

1. Right-click the server node in the Assemblies or Assets tab.
2. Click **Remove Server**.

Logging In and Out of Servers

Gateway panel > Assemblies/Assets tab > Expand server node
Gateway panel > Search tab > Login

In order to use Gateway, you must first log in (connect) to the server where Deep Server Web was previously installed and configured.

Once you have logged in to a server, any projects and categories that were created in Deep Server Web are displayed in the Gateway panel. You can now continue with other server-related tasks. For example, uploading and managing assets and derivatives.

Note: Please see your Systems Administrator for further information for information on Deep Server Web.

Copyright © Right Hemisphere 2006. All Rights Reserved.

When you close Deep Exploration, you are automatically logged out of any current servers.

Procedures

To log in to a server:

1. Add a Deep Server (on page 207) in the Gateway panel.
2. Do one of the following to display the Login dialog (on page 208):
   - Expand the node of the server to which you want to connect in the Assemblies or Assets tab.
   - Select the server to which you want to connect in the Search tab and click **Login**.
3. Enter the user name and password of the Deep Server.
4. Click **OK**.

All Deep Server Web projects and categories and the 'logged in' icon  are displayed in the Gateway panel.

To log off a server:

1. Right-click the node of the server from which you want to disconnect in the Assemblies or Assets tab.
2. Click **Log Out**.

All Deep Server Web projects and categories are removed from the Gateway panel, and the 'logged out' icon .

To reconnect to a server:

1. Do one of the following to display the Login dialog:
   - Expand the node of the server to which you want to connect in the Assemblies or Assets tabs.
   - Select the sever to which you want to connect in the Search tab and click **Login**.
2. Enter the user name and password of the Deep Server.
3. Click **OK**.

Login Dialog

Gateway panel > Assemblies/Assets tab > Expand server node
Gateway panel > Search tab > Login

The Login dialog is used to gain access to Deep Server by entering the user name and password at the beginning of the session.

Interface

Name—The user name that is used to log in to the Deep Server.

Password—The password used to confirm that the user has permission to the Deep Server.

OK—Closes the dialog, and applies the settings. Any changes are saved.

Cancel—Cancels the process and closes the dialog. Any changes made to the settings are lost.

Copyright © Right Hemisphere 2007. All Rights Reserved.

Help—Opens the relevant Help topic.

Adding Projects

Gateway panel > Assemblies tab > Right-click server node > Add Project
Gateway panel > Assets tab > Right-click server node > Add Project

You can add projects to server nodes to store and manage assets using the Add Project dialog (on page 406). After adding a project, you can upload assets (on page 209) into the project and download subgroups (on page 212) for all assets and items within the project.

Procedure

To add a new project:

1. Right-click the server node in the Assemblies or Assets tab.
2. Click **Add Project**.
3. Enter a name and description for the project, and then click **OK**.

Uploading Assets and Assemblies

Gateway panel > Assets tab
Gateway panel > Assemblies tab

You can upload single and assembly assets to the server databases. You can then browse and view (on page 212) the asset's derivatives, associated files, and subgroups. Assemblies can also be deleted (on page 217).

There are two methods of uploading assets:

- Uploading single assets (on page 209).
- Uploading assemblies (on page 210).

You can define certain attributes when uploading an asset, with which to help you manage that asset and its derivatives. For example, you can select the project in which to group the asset, and select a processing method to ensure the asset is treated in a particular manner when being rendered. You can also define a category and metadata on which to search for the asset later on.

When uploading assets, the 'added files' window displays all the assets that will be uploaded. Assets that cannot be uploaded are displayed as inactive in the window and can be removed at any time.

You must refresh the Gateway panel (on page 218) to see the newly uploaded assets and assemblies. Once you have uploaded assets, you can perform a number of procedures including creating and deleting derivatives.

Important Note: Uploading assets does not overwrite identical assets in the database' if you upload an asset twice, the asset is added to the database twice.

Copyright © Right Hemisphere 2007. All Rights Reserved.

Uploading Single Assets

Gateway panel > Assets tab > Right-click server or folder node > Upload Assets

Single assets can be uploaded to the server databases using the Upload Asset dialog (on page 407), for use in Deep Exploration.

Procedures

To upload single assets:

1. Right-click a server or folder node in the Assets tab.
2. Click **Upload Assets**. The Upload Asset dialog is displayed.
3. Click **Add Asset**, then navigate to and select the assets that you want to upload.
4. Click **Open**. The asset files are displayed in the added files window.
5. Select the check boxes for the assets you want to upload.
6. Select a project in which to group the asset.
7. Select a processing method to apply to the asset.
8. Enter one or more category keywords in which to group the uploaded asset.
9. Enter one or more metadata keywords, separated by spaces, by which the asset can be searched (on page 213).
10. Click **Upload**. The assets are queued for processing in the selected server.

    Note: You click Abort at any point to cancel the upload process.

11. Click **Refresh**. Once the assets have been processed and uploaded, they are displayed in the Assets tab.

To remove assets from the added files window:

1. Select the check boxes in the added files window for the assets you want to remove.
2. Click **Remove**.

Uploading Assemblies

Gateway panel > Assemblies tab > Right-click server or folder node > Upload Assembly

Assemblies can be uploaded to the server databases using the Upload Assembly dialog (on page 407), for use in Deep Exploration. Assemblies are uploaded in a hierarchal manner beginning with all the assembly's parts and working upwards through the hierarchy until the assembly is completely uploaded.

Note: You must upload the assembly and all part files when uploading an assembly.

When uploading assemblies, you can choose to assemble them into a single .rh file or to simply upload the files without building the .rh file. You can then build the assembly at a later time. This is helpful if you want to conserve resources when uploading multiple assemblies.

You must select the 'top level assembly' file to upload, as this file determines how the part files are arranged to create an assembly.

After you have uploaded assembly files and entered associated metadata, you can click the Search tab (on page 213) to search the metadata for those assets.

Copyright © Right Hemisphere 2007. All Rights Reserved.

Note: The file types that can be uploaded or set as a main file are dependant on the modules installed for Deep Server. See your Systems Administrator for further information.

Procedures

To upload an assembly:

1. Right-click a server or folder node in the Assemblies tab.
2. Click **Upload Assembly**. The Upload Assembly dialog is displayed.
3. Click **Browse**.
4. Navigate to, and select the folder that contains the assembly and part files that you want to upload.
5. Click **OK**. The assembly files are displayed in the Assembly files window.
6. Do one of the following:
   - Select individual files in the Assembly files window to upload single files.

     Note: You can hold down SHIFT to select adjacent files or CTRL to select non-adjacent files.

   - Click **Select All** to upload all files.
7. Click **Add**. The files are added to the added files window.
8. Select the assembly file in the added files window and click **Top Level**.
9. Select a project in which to group the assembly.
10. Select a processing method to apply to the asset.
11. Enter one or more category keywords in which to group the uploaded assembly.
12. Enter one or more metadata keywords, separated by spaces, by which the assembly can be searched.
13. Select the 'Referencing' check box to reference all assembly files to their original location instead of packed in a .zip file. 'Referenced'' files must be in a shared directory in which Deep Server has rights to access.
14. Do one of the following:
    - Select the 'Build assembly' check box and click **Upload** to upload the files and assemble them into an .rh file.
    - Click **Upload** to upload the files without assembling them into an .rh file.
15. Click **OK**. The assembly files are queued for processing in Deep Server.

    Note: You click Abort at any point to cancel the upload process.

16. Click **Refresh**. Once the assembly files have been processed and uploaded, they are displayed in the Assemblies tab.

To remove assembly files from the added files window, do one of the following:

- Select individual files in the added files window and click **Remove** to remove single files.
- Click **Remove All** to remove all files.

  Note: You can hold down SHIFT to select adjacent files or CTRL to select non-adjacent files.

Copyright © Right Hemisphere 2007. All Rights Reserved.

Downloading Assets and Items

Gateway panel > Assets tab > Right-click file > Download asset
Gateway panel > Assemblies/Assets tab > Right-click file > Download Derivative
Gateway panel > Assemblies/Assets tab > Right-click file > Download All Derivatives
Gateway panel > Assemblies/Assets tab > Right-click file > Download Derivative as Link
Gateway panel > Assemblies/Assets tab > Right-click folder node > Download All Subgroups

You can download assets, derivatives, associated files, and Internet links for those items to your computer. You can also download sub-assemblies and part files (that is, sub-assemblies and part files). The downloaded files can then be used to embed 2D and 3D content (on page 161) in Office and Adobe PDF documents.

Files are downloaded to temporary sub-folders that are named according to the assets assigned categories (on page 209), but they can be removed (on page 217) as required. By default, these sub-folders are created in the 'My Documents\My 3D Models\Gateway' folder (temporary files folder). However, you can use the Preferences dialog (on page 405) to choose an alternate folder location as required. If the contents in the temporary files folder exceed the cache size (on page 405), Deep Server deletes the first files in the list to make room for new files as they are downloaded.

Note: If you are downloading a single asset that is part of an assembly or sub-assembly, you get the 3D RH Preview format. If you are downloading an asset that is not part of an assembly or sub-assembly, then you get the original asset.

When downloading derivatives, you can select to download only the base derivative (RH 3D Preview file), or all derivatives of the selected file.

Links are dynamic, in that they are linked to the most recent version of that item; if you embed a link into an Office document and the related item is modified, you can upload the most recent version of the item to Deep Server Web and the document link is automatically updated.

Note: Please see your Systems Administrator for further information for information on Deep Server Web.

Viewport Display

- Whenever you click an item in a Gateway tab (on page 387), it is downloaded to the temporary files folder automatically, and displayed in the viewport.
- Items must be downloaded before they can be displayed in the Deep Exploration viewport via clicking that item in the Gateway tree (on page 309). All the derivatives, associated files, and subgroups that correspond to that item are then also displayed in the Gateway tabs.

Procedures

To download an asset, do one of the following in the Gateway panel:

- Click the 'download' button  for the asset you want to download.
- Right-click the asset in the Assets tab, and then click Download **Asset**.

The asset is downloaded and displayed in the viewport and the 'downloaded' button  is displayed beside the asset in the Gateway panel.

To download derivatives:

1. Do one of the following in the Gateway panel:

- Click the 'download' button  for the item whose base derivative you want to download. The base derivative is downloaded. If the item is an associated asset, the original asset is also downloaded.

Copyright © Right Hemisphere 2007. All Rights Reserved.

- Right-click the item in the Assemblies or Assets tab, and then click **Download Derivative** to download the base derivative of the selected item. The base derivative is downloaded. If the item is an associated asset, the original asset is also downloaded.
- Right-click the item in the Assemblies or Assets tab, and then click Download **All Derivatives** to download all derivatives of the selected item. All derivatives of the selected item are downloaded.

The selected item is displayed in the viewport, and the 'downloaded' button is displayed beside each item in the Gateway panel.

To download a derivative as a link:

1. Right-click an item in the Assemblies or Assets tab.
2. Click **Download Derivative as Link**.

The derivative link of the selected item is downloaded.

To download all subgroups:

1. Right-click the item, for which you want to download all subgroups, in the Assemblies tab.
2. Click **Download All Subgroups**.

All base derivatives of the selected item's child nodes or assets are downloaded and the 'downloaded' button is displayed beside each item in the Gateway panel.

Searching for Assets

Gateway panel > Search tab > Basic Search
Gateway panel > Search tab > Advanced Search

You can perform customized searches for assets. Once assets are located, you can download (on page 212) them to your computer, and browse and view (on page 214) the assets, derivatives, associated files, and subgroups.

There are two methods of searching for assets:

- **Basic Search**—Performed using one field to search for keywords via the Basic Search tab.
- **Advanced Search**—Performed on a number of fields to narrow your search using multiple criteria via the Advanced Search tab. This criteria includes asset name, category, date created, file name, file size, instance name, metadata, and project.

A basic search consists of the word or a combination of words separated by spaces that you want to find. You can use Boolean, wildcard, and nested expressions. You can also use the advanced search facility to further define your search.

Any assets that match the search criteria are displayed in a Search tab (on page 388) in the File list (on page 384). You can now download and view the files, or modify your search criteria and run a new search.

Note: It is important to distinguish between the Search tab located in the Gateway panel, and the Search tabs that are displayed in the File list whenever a search is performed.

Searching Rules

The basic rules for searching are:

- Searches are not case-sensitive, so you can type your search in uppercase or lowercase characters.
- You may search for any combination of letters (a through z) and numbers (0 through 9).

Copyright © Right Hemisphere 2007. All Rights Reserved.

- Punctuation marks such as the period, colon, semicolon, comma, and hyphen are ignored during a search.
- Group the elements of your search using spaces to set apart each element. These spaces are treated as an AND Boolean expression.
- The asterisk wildcard (*) is used at the beginning and within a set of characters. It is automatically added to the end of each word in a search. If it is added to the end of a word, the wildcard character is ignored.
- You cannot search for quotation marks (").
- Words in the noise word list are not included in your search. These words include commonly used pronouns, adjectives, and verbs. For example 'if', 'my', and 'the'.

Procedures

To perform a basic search:

1. Click the Basic Search tab on the Search tab (on page 387).
2. Enter the keywords (on page 311) on which you want to search.
3. Do one of the following:
   - Click **Search**.
   - Press ENTER on your keyboard.

The base derivatives for all the assets that match the search criteria are displayed in a Search tab (on page 388) in the File list.

To perform an advanced search:

1. Click the Advanced Search tab on the Search tab.
2. Enter the criteria (on page 311) on which you want to search.
3. Do one of the following:
   - Click **Search**.
   - Press ENTER on your keyboard.

Note: You can click Reset at any time to reset the fields and perform a new search.

The base derivatives for all the assets that match the search criteria are displayed in a Search tab in the File list.

To close a Search tab:

Click **Close**  on the tab that you want to close.

Copyright © Right Hemisphere 2007. All Rights Reserved.

Browsing and Viewing Assets and Items

Gateway panel > Assemblies tab
Gateway panel > Assets tab

You can browse and view assets and items in a number of different ways:

- Browse assets and items (on page 209) in the Assembly and Assets tabs.
- Display downloaded files (on page 212) in the viewport via the Assembly and Assets tabs.
- Browse and display items (derivatives, associated files, and subgroups), and located assets via the Gateway tabs (on page 387): the Derivatives, Associated Files, and Subgroups tabs.
- Browse and display located assets via the Search tabs (on page 388).

Assemblies, singular assets, and parts are denoted by the assembly  and single asset/part  icons in the Assembly and Assets tabs.

Procedure

To browse and view assets and items:

1. Expand the nodes in the Assemblies or Assets tab. All assets and items of those nodes are displayed in the Gateway panel.
2. Do one of the following:
   - Click an asset or item node. All derivatives are displayed in the Derivatives tab, all associated files are displayed in the Associated Files tab, and all base derivatives of the selected item's child nodes or assets are displayed in the Subgroups tab. If the asset or item has been downloaded, it is displayed in the viewport.
   - Drag an asset or item into the viewport. If the asset or item has been downloaded, it is displayed in the viewport.
3. Do one or more of the following:
   - Continue to browse and view assets and items in the Assemblies or Assets tabs.
   - Click a located asset in the Search tabs. The asset is downloaded automatically and displayed in the viewport.
   - Click an item in the Gateway tabs. The item is downloaded automatically and displayed in the viewport.

Copyright © Right Hemisphere 2007. All Rights Reserved.

Associated Files

Gateway panel > Assemblies/Assets tab > Right-click file > Upload Associated Files
Gateway panel > Assemblies/Assets tab > Right-click file > Upload Scene as Associated File
Gateway panel > Assemblies/Assets tab > Click file > Associated Files tab

Files can be associated with assets and uploaded using the Upload Associated Files dialog (on page 411); associated files can be any type of file. For example, a Microsoft Word document.

Associated files can be viewed (on page 214) and removed from the temporary files folder (on page 217) as required.

Note: You cannot search for associated files directly; you must first search for the asset and then look in the Associated Files tab (on page 387).

Procedure

To associate and upload a file:

1. Right-click the asset or item node in the Assemblies or Assets tab.
2. Do one of the following:
   - Click **Upload Associated Files**.
   - Click **Upload Scene as Associated File**, enter a name for the new file, and then click **OK**.
3. Click **Add Asset**, then navigate to and select the files that you want to upload.
4. Click **Open**. The files are displayed in the added files window.
5. Click **Upload**.

Updating Assets

Gateway panel > Assemblies tab > Right-click asset or item > Update Asset
Gateway panel > Assets tab > Right-click asset > Update Asset

If an asset has been modified, you can update it and all its derivatives using the Update Asset dialog (on page 412). Note that you can only update single assets, not assembly or part files.

Procedure

To update an asset and its derivatives:

1. Right-click the asset in the Assets tab and click **Update Asset.**
2. Click **Add Asset**, and then navigate to and select the assets that you want to update.
3. Click **Open**. The asset files are displayed in the added files window.
4. Select the check boxes for the assets you want to update.
5. Click **Update**.

The asset and all its derivatives are updated in Deep Server.

Note: You click Abort at any point to cancel the update process.

Copyright © Right Hemisphere 2007. All Rights Reserved.

Removing Assets and Items

Gateway panel > Assemblies/Assets tab > Right-click asset or file > Remove Derivative from Cache
Gateway panel > Assets tab > Right-click asset or file > Remove Asset from Cache

Gateway can be used to remove assets, base derivatives, and associated files that have been downloaded to your computer (on page 212).

Procedures

To remove a derivative or associated file:

1. Right-click the file that you want to remove in the Assemblies or Assets tab.
2. Click **Remove Derivative from Cache**.

The base derivative is removed from the temporary files folder.

To remove an asset:

Right-click the asset that you want to remove in the Assets tab, and click **Remove Asset from Cache**.

Deleting Assemblies

Gateway panel > Assemblies tab > Right-click assembly > Delete Assembly from Server

Gateway can be used to delete assemblies from the server databases.

Procedure

To delete an assembly:

1. Right-click the assembly file you want to remove in the Assemblies tab.
2. Click **Delete Assembly from Server**.
3. Click **Yes**.

The assembly is deleted.

Copyright © Right Hemisphere 2007. All Rights Reserved.

Viewing and Modifying Properties

Gateway panel > Assembly/Asset tab > Right-click node > Properties

You can view properties of any node displayed in the Gateway panel, using the Gateway Properties Dialog (on page 408). For example, server, folder, and file (asset or derivative) nodes. You can view:

- The node name, type, location, and contents. For example, projects within a server node, or sub-assemblies, and parts within an assembly node.
- The category, metadata, and version details for assembly nodes.
- Server security certificates.
- Server supported processing methods. A processing method is a series of events based on the kind of output required for each asset, that determine how assets are treated by a Deep Server after uploading.
- Server supported 3D asset and assembly formats. For example, .rh and .dwg, .asm, and .catproduct.

You can also edit server names.

Procedures

To view node properties:

1. Right-click the node for which you want to view the properties in the Assemblies or Assets tab.
2. Click **Properties**.

To modify server node properties:

1. Right-click the server node in the Assemblies or Assets tab.
2. Click **Properties**.
3. Make the selections you require and click **OK**.

Refreshing the Gateway Panel

Gateway panel > Right-click in Assemblies tab > Refresh
Gateway panel > Right-click in Assets tab > Refresh

You can refresh the Gateway panel to show you the latest folder structure and latest files. For example, if any projects have been added, assets uploaded and removed, or assemblies deleted.

Procedure

To refresh the Gateway panel:

1. Right-click in the Assemblies or Assets tab.
2. Click **Refresh.**

Copyright © Right Hemisphere 2007. All Rights Reserved.

Modifying Preferences

Gateway panel > Right-click in Assemblies tab > Preferences
Gateway panel > Right-click in Assets tab > Preferences

The Preferences dialog (on page 405) can be used to view and modify the Gateway preferences including file locations, available disk space, file storage settings, and server details.

Procedure

To modify preferences:

1. Right-click an empty area in the Assemblies or Assets tab.
2. Click **Preferences**. The Preferences dialog is displayed.
3. Make the selections you require.
4. Click **OK**.

Copyright © Right Hemisphere 2007. All Rights Reserved.

JT PMI Module

Product Manufacturing Information (PMI) is an implementation of the 'Digital Product Definition Data Practices', which establishes requirements for preparing, organizing, and interpreting three-dimensional digital product images. The PMI Module provides a way to render PMI data such as tolerances, dimensional data, and other markup annotations.

PMI comprises different types of markups and conveys information on the design of a product's components for manufacturing. The PMI Module is a plugin for Deep Exploration CAD Edition and is used to extract and display all the PMI data and any associated metadata from within CATIA 5 and JT files.

After the PMI Module is installed, Deep Exploration automatically displays the PMI toolbar (on page 375) for files that contain PMI data. You must first import the PMI data contained within a file via the file's import properties (on page 40) in order to view that data. You can then establish PMI settings and select the various types of PMI markups to display.

The PMI markups are:

- **Text:** Text markups.
- **Rich text:** Special formatted text markups.
- **GD&T:** Measurements, tolerances, material data, and reference datum.
- **Dimensions:** Detailed dimension line markups.
- **Datum:** Special reference points or planes for measurement markups sometimes shown as a single letter enclosed within a box.
- **Metadata:** Attributes and properties that are associated with a part when it was created.
- **Roughness:** The surface finish or roughness markups.

The PMI markups that a file can display depend on the file type as follows:

File Format	Text	Rich Text	GD&T	Dimensions	Datum
JT	Yes	No	Yes	Yes	Yes
CATIA 5	Yes	Yes	Yes	Yes	Yes

Using the PMI Module, you can:

- View and hide PMI markups (on page 221).
- Edit markups (on page 156).
- Delete markups.
- View metadata associated with the current file (on page 376).
- Modify the PMI markup settings (on page 377).

PMI Data Rules

Certain rules apply when viewing PMI data:

- You must import the PMI data contained within a file in order to view that data.
- The JT Module must be installed to view any PMI data stored within JT supported file formats.
- If you are using the Deep Publish (http://www.righthemisphere.com/deeppublish) or Deep View (http://www.righthemisphere.com/deepview) viewing application to view models, PMI data is automatically displayed if it exists in the current .rh file.
- As .jt file PMI BOM data is derived from the BOM in the file itself when publishing to PDF documents (on page 223), you must ensure that all object names in the Scene tree match those in the PMI metadata. This ensures that the assembly structure is maintained so all objects and assemblies can be viewed via the BOM in the published PDF document.

Copyright © Right Hemisphere 2007. All Rights Reserved.

Markup Naming Conventions

Markups within JT files must be include certain text to ensure the markups' related metadata can be displayed. The markup text strings are:

- BOM: Only markups that include 'BOM' in the name, and for which the associated metadata strings are over 0 characters long, are displayed as metadata.
- NOTES: Only markups that include 'NOTES' in the name, and for which the associated metadata strings are over 100 characters are displayed as metadata.
- NT: Only markups that include 'NT' in the name, and for which the associated metadata strings are over 100 characters are displayed as metadata.
- TITLE: Only markups that include 'TITLE' in the name, and for which the associated metadata strings are over 50 characters are displayed as metadata.
- TOLERANCE: Only markups that include 'TOLERANCE' in the name, and for which the associated metadata strings are over 0 characters long, are displayed as metadata.

For example, if a markup included the text 'Apples', the metadata would not display.

Procedure

To begin using PMI, do one of the following:

- Choose **View > Toolbars and Controls> PMI** on the menu bar.
- Right-click the application menu bar and click **PMI**.
- Right-click the application menu bar and choose Customize Layout > Toolbars tab, select the **PMI** check box, and then click **OK**.

Note: If a part contains PMI, Deep Exploration automatically loads the PMI toolbar.

Copyright © Right Hemisphere 2007. All Rights Reserved.

Viewing and Hiding Markups

PMI toolbar > Text
PMI toolbar > Rich Text
PMI toolbar > GDT
PMI toolbar > Dimensions
PMI toolbar > Datum
PMI toolbar > Metadata
PMI toolbar > Show/Hide Metadata

The PMI toolbar can be used to display and hide the various PMI markups including displaying on-screen metadata, metadata associated with the file, and showing and hiding individual PMI markups depending on their data type.

If a markup is associated with a surface, clicking the markup highlights the object's surface. Non-renderable PMI metadata can be displayed in the Metadata dialog (on page 376).

Procedures

To view individual PMI markups:

1. Open a 3D file (on page 39) ensuring all PMI data is imported (on page 40).
2. Ensure the Display > Show Markups command is selected on the menu bar.
3. Do one of the following on the PMI toolbar for the current model view:
   - Click **Text**  to view basic lines and vectors markups.
   - Click **Rich Text**  to view special formatted text markups.
   - Click **GDT**  to view measurements, tolerances, material data, and reference datum markups.
   - Click **Dimensions**  to view dimension line markups.
   - Click **Datum**  to view special reference points or planes for measurement markup.
   - Click **Metadata**  to open the Metadata dialog and view associated metadata.
   - Click **Show/Hide Metadata**  with on-screen metadata hidden.

To hide markups, do one of the following:

- With the PMI data displayed, click the related markup button on the PMI toolbar for the type of markup you want to hide.
- Clear the Display > Show Markups command on the menu bar to hide all PMI markups.

Copyright © Right Hemisphere 2007. All Rights Reserved.

PDF Publishing Module

The PDF Publishing Module is a 2D and 3D graphics publishing system that comprises of the PDF Publishing Module and PDF Template Designer.

- The PDF Publishing Module saves 2D and 3D files to the Adobe Portable Document (.pdf) format, utilizing PDF Templates to create quality 2D and interactive 3D PDF documents.
- The PDF Template Designer is a plug-in to Adobe Acrobat 3D v8.0 or Acrobat Professional v8.0, which enables the creation of PDF Templates from any non-restricted PDF file. Any 3D content contained within the resulting PDF automatically converts to the Universal 3D (.u3d) format (on page 532).
- The PDF Template Designer also works with Adobe Acrobat Professional and Acrobat 3D v7.07+, but requires a change to the install path upon installation.

The .pdf file format (Portable Document Format), developed by Adobe, is used for representing documents in a manner that is independent of the original application software, hardware, and operating system used to create those documents. A .pdf file can describe documents containing any combination of text, graphics, and images in a device independent and resolution independent format.

Note: The .u3d format, adopted by Adobe, is required and used as the 3D publishing format within a PDF file.

The PDF Publishing Module is included in the following software:

- RH5 Deep Exploration Standard.
- RH5 Deep Exploration CAD Edition.

The PDF Publishing Module is also available to automate PDF publishing using:

- RH5 Deep Server and v4.1.

The PDF Publishing Module is available as an add-on to:

- Adobe Acrobat 3D v8.0.

The PDF Publishing Module also installs The PDF Template Designer into:

- Adobe Acrobat 3D v8.0.
- Adobe Acrobat Professional v8.0.

PDF Templates

The PDF Publishing Module is a creative and powerful concept in the publishing of PDF documents, and comes with a number of ready to use PDF Templates. Each PDF Template is designed and authored to deliver a business solution. Any PDF can be used as the “base” of a PDF Template.

Note: The PDF cannot be restricted in any way.

While some PDF Templates can be basic in design, the real power of the PDF Template enables the transformation of a simple base PDF document into a business application. The creation of these PDF Templates requires no programming or JavaScripting.

Any existing PDF document can be converted into a PDF Template. The only limitation is that the PDF cannot be secured or restricted in any way, and the Acrobat 3D v8.0 or Acrobat Professional v8.0 Advanced Editing toolbar must be available for editing.

To turn on the Advanced Editing Toolbar Acrobat 3D or Acrobat Professional

Select > View > Toolbars > Advanced Editing

Copyright © Right Hemisphere 2007. All Rights Reserved.

If you are creating a custom PDF Template, or your original PDF document was created in Adobe Illustrator CS or Adobe InDesign CS, you have the additional capability of creating a layered PDF file. Layered PDF files enable very robust PDF Templates, as you can place specific RH Controls onto any available layer within the PDF document. This capability is useful for creating Rich User Interfaces (RUIs) to control the 2D Images and 3D Scenes within the final interactive PDF document.

Hints and Tips

Layered PDF files can be generated using the following software products:

- Adobe Illustrator CS v1.0+ (Right Hemisphere Recommended).
- Adobe InDesign CS v1.0+ (Right Hemisphere Recommended).
- Microsoft Visio 2003.
- Autodesk products such as AutoCAD.

The PDF Publishing Module is delivered with a number of PDF Templates that can be used to publish useful PDF documents. These are described further in Appendix A: 2D Templates (on page 242) and Appendix B: 3D Templates (on page 244).

These PDF Templates are stored in the 'PDF_Publishing\Templates' folder where the PDF Publishing Module is installed. You can also create your own PDF Templates in Adobe Acrobat 3D v8.0, or Adobe Acrobat Professional v8.0 using the PDF Template Designer. The RH Acrobat Controls are accessed via the Advanced Editing toolbar.

Copyright © Right Hemisphere 2007. All Rights Reserved.

RH Controls menu

RH Controls are located on the Advanced Editing toolbar within Acrobat 3D and Acrobat Professional. These Buttons, Text Fields, List Boxes, Drop-down Lists and Radio Buttons are based on different PDF workflows. For example, available RH Controls that may be required for producing PDF documents relating to an Assembly / Disassembly Stepped procedure are located in the Steps drop down menu.

Procedure

To insert an RH Control into your template:

1. Click **PDF Template Designer**  on the Advanced Editing toolbar.
2. Click the Control that you wish to use.
3. Modify the Control's properties as required.
4. Click **OK**.

Interface

 **2D Image** (on page 226).

 **3D Scene** (on page 226).

 **3D Navigation Help** (on page 227).

 **Animation** (on page 227).

 **Model Views** (on page 229).

 **PMI** (on page 229)

 **Model Render Modes** (on page 230).

 **Selections** (on page 231).

 **Standard Views** (on page 232).

 **Steps** (on page 232).

 **Layers** (on page 234)

Update PDF Template

Automate PDF Publishing?

Copyright © Right Hemisphere 2007. All Rights Reserved.

RH Controls

A number of 'RH Controls' are installed to Acrobat 3D or Acrobat Professional when you install the PDF Template Designer. These are used to edit the PDF Templates delivered with the PDF Publishing Module, or to create new custom PDF Templates. The PDF Templates are used to publish PDF documents via the PDF Publishing Module. You can edit RH Controls in the same way as you edit normal Adobe Acrobat objects.

RH Controls are specific to the particular 2D and 3D workflows in which they are located; you should use RH Controls in their related templates to ensure that they function correctly. For example, if you use the Step Description Block control in the Simple_Animation_Template, the control may not function correctly in a document primarily made with other controls.

RH Controls are pre-programmed Acrobat Controls that provide specific 2D and 3D functionality in a PDF. They are available as follows:

- **2D Image**: Displays the 2D image added to the template.
- **3D Scene**: Displays the scene in the document.
- **Buttons**: Used to control various aspects of the 3D scene including animation, 3D object display and views display.
- **Text Fields**: Used to display a variety of information about the scene.
- **Combo Boxes**: Used to display Model Views.
- **List Boxes**: Used to display Steps and the Model View list.
- **Drop-down Lists**: Used to select from a list of items for display in the document.
- **Radio Buttons**: Used to select a specific 3D Render Mode, Layer or Animation ending.

Note: For security, the JavaScript code for these objects is obfuscated.

Please see the Adobe Acrobat 3D or Professional Help for further information.

Image Annotations

Fields are available to determine the content area of graphics in a PDF document.

Interface

2D Image—Determines the content area for a 2D image.

- **2D Annotation width**—The width of the content area.
- **2D Annotation height**—The height of the content area.
- **Layers**—The PDF layer at which this button applies.

3D Scene—Determines the content area for a 3D scene.

- **3D Annotation width**—The width of the content area.
- **3D Annotation height**—The height of the content area.
- **Lock Camera**—The camera is locked in position. That is, the model cannot be moved.
- **Force Projection Type**—Controls the type of view.
- **Default Render Mode**—Controls the way in which the graphic is displayed in the document.

Copyright © Right Hemisphere 2007. All Rights Reserved.

- **Default selection mode**—Controls the way in which the selected part of the graphic is displayed in the document.
- **Default selection color**—Controls the color in which the graphic is displayed in the document.
- **Outline angle**—Controls how many lines are created in Illustration and Shaded Illustration Render Modes. High numbers mean fewer lines. The range is 0 to 180, and is measured in degrees.
- **Override Background Color**—Controls the way in which the graphic's background is displayed in the document.
  - **Use Acrobats Default**—Use the default color settings in Acrobat.
  - **Use Current from DE/DS**—Use the default color settings in Deep Exploration or Deep Server.
  - **Use Custom**—Use custom colors.
- **Background Color (top)**—Used to set the color of the upper half of the background gradient.
- **Background Color (Bottom)**—Used to set the color of the lower half of the background gradient.
- **Default Camera Mode**—Used to set the default camera mode in the published PDF.
  - **Rotate**—Sets the default camera mode to Rotate.
  - **Spin**—Sets the default camera mode to Spin.
  - **Pan**—Sets the default camera mode to Pan.
  - **Zoom**—Sets the default camera mode to Zoom.
- **Use Rotation/Zoom Limits**—Used to limit the rotation and allowed zooming of a model in the published PDF.
- **Layers**—N/A. 3D Scenes are always on top of the PDF layer stack. 3D scenes cannot overlap within the PDF Template.

3D Navigation Help

Other fields are available to determine navigation options in a PDF document.

Interface

OK **3D Navigation Help**—Enables the 3D mouse controls.

- **Layers**—The PDF layer at which this button applies.

Copyright © Right Hemisphere 2007. All Rights Reserved.

Animation Controls

Animation buttons are used to control the way in which animation (on page 109) is handled in a PDF document.

Interface

Play Animation—Plays a simple animation.

- **3D Annotation Name**—Name of the target annotation. That is, the viewer in which the animation will play.
- **Animation Ending**—Used to determine the way in which the animation ends.
  - **Stop at End**.
  - **Repeat at End**.
  - **Reverse at End**.
- **Layers**—The PDF layer at which this button applies.

Pause Animation—Pauses a simple animation while playing.

- **3D Annotation Name**—Name of the target annotation.
- **Layers**—The PDF layer at which this button applies.

Rewind Animation—Rewinds a simple animation back to the first frame.

- **3D Annotation Name**—Name of the target annotation.
- **Layers**—The PDF layer at which this button applies.

Forward Animation—Jumps to the last frame in a simple animation.

- **3D Annotation Name**—Name of the target annotation.
- **Layers**—The PDF layer at which this button applies.

Animation Ending Options—Forwards to the end of an animation, and offers selection as to the method of ending the animation.

- **3D Annotation Name**—Name of the target annotation.
- **Layers**—The PDF layer at which this button applies.

Sequences Drop down—Controls the sequences, and allows selection of an animation sequence associated with the model.

- **3D Annotation Name**—Name of the target annotation.
- **Play on Selection**—Automatically plays the selected sequence, when selected from the drop down menu, or when the Play button is selected.
- **Layers**—The PDF layer at which this button applies.

Named Sequence—Activate a 'named' sequence.

- **3D Annotation Name**—Name of the target annotation.
- **Sequence Name**—The name of the sequence. This name displays on the button.
- **Layers**—The PDF layer at which this button applies.

Sequences List—Displays a list of all the sequences contained within the current file.

- **3D Annotation Name**—Name of the target annotation.

Copyright © Right Hemisphere 2007. All Rights Reserved.

- **Play on Selection**—Automatically plays the selected sequence, when selected from the drop down menu, or when the Play button is selected.
- **Layers**—The PDF layer at which this button applies.

Model View Controls

Model view controls are used to display different views of the 3D model in a PDF document.

Interface

 **Model View Drop-down**—Controls the camera model views.

- **3D Annotation Name**—Name of the target annotation.
- **Layers**—The PDF layer at which this button applies.

 **Named View**—Activate a 'named' view.

- **3D Annotation Name**—Name of the target annotation.
- **Model View Name**—The name of the customized model view. This name displays on the button.
- **Layers**—The PDF layer at which this button applies.

 **List Model Views**—Displays a list of all the model views contained within the current file.

- **3D Annotation Name**—Name of the target annotation.
- **Auto Activate**—Automatically activate when a model view is selected.
- **Use Filter**—Use a filter to select only those model views that contain a selected part.
- **Layers**—The PDF layer at which this button applies.

 **View Name Block**—Displays the customized name of the model view.

- **3D Annotation Name**—Name of the target annotation.
- **Layers**—The PDF layer at which this button applies.

 **View Description Block**—Displays the customized description of the model view.

- **3D Annotation Name**—Name of the target annotation.
- **Layers**—The PDF layer at which this button applies.

Copyright © Right Hemisphere 2007. All Rights Reserved.

PMI

PMI buttons are used to produce PDF documents relating to PMI (on page 220) workflows including BOM (on page 135), and model views (on page 77).

Note: You must have the PMI module installed to be able to use PMI controls.

Interface

 **List BOM**—Displays all parts and quantities from the parts list.

- **3D Annotation Name**—Name of the target annotation.
- **Show Parts Quantity**—Displays or hides the quantity of parts column.
- **Layers**—The layer at which this button applies.

 **List Model Views**—Displays a list of all the PMI model views contained within the current file, for the selected part.

- **3D Annotation Name**—Name of the target annotation.
- **Layers**—The layer at which this button applies.

 **PMI On/Off**—Turns the current model view PMI data on or off.

- **3D Annotation Name**—Name of the target annotation.
- **Layers**—The layer at which this button applies.

 **PMI Part Metadata**—Used to view the attributes and properties that are associated with parts when they are created, including surface tolerance data and title block information.

- **3D Annotation Name**—Name of the target annotation.
- **Metadata Name**—The name of the applicable metadata to display in the text field.
- **Parse Metadata from Line**—The line number from which to display the metadata.
- **Parse Metadata To Line**—The line number to which to display the metadata.

Note: The setting -1, indicates 'show all metadata', or displays all metadata to the end of a metadata block.

- **Layers**—The layer at which this button applies.

Model Render Modes

Model render modes are used to display the 3D model in different rendering modes.

Interface

 **Render Modes**—A control to select different render modes. These appear as three custom radio buttons.

Note: If you require more than three available render modes in which to view the 3D scene, use this control twice, and nominate a further three.

- **3D Annotation Name**—Name of the target annotation.
- **Button 1 Render Mode**—Name of the first render mode to display.
- **Button 2 Render Mode**—Name of the second render mode to display.
- **Button 3 Render Mode**—Name of the third render mode to display.
- **Layers**—The PDF layer at which this button applies.

Copyright © Right Hemisphere 2007. All Rights Reserved.

Selection Controls

Selection controls are used to manage the way that different components display in the 3D model. For example, to hide certain parts of the model, or to show any metadata associated with a model.

Interface

OK **Hide Selected**—Hides the selected part in the 3D scene.

- **3D Annotation Name**—Name of the target annotation.
- **Layers**—The PDF layer at which this button applies.

OK **Hide Unselected**—Hides all unselected parts in the 3D scene.

- **3D Annotation Name**—Name of the target annotation.
- **Layers**—The PDF layer at which this button applies.

OK **Show All**—Show all 3D parts in the 3D scene.

- **3D Annotation Name**—Name of the target annotation.
- **Layers**—The PDF layer at which this button applies.

TI **Selected Part Name**—Displays the name of the selected part in the 3D scene.

- **3D Annotation Name**—Name of the target annotation.
- **Layers**—The PDF layer at which this button applies.

OK **Part Info**—Launches a PDF of the selected part name.

Note: The PDF which is launched must have the same name of the selected part (Partname.pdf).

- **3D Annotation Name**—Name of the target annotation.
- **Parts Directory**—The location of the directory in which the parts are located.
- **Layers**—The PDF layer at which this button applies.

OK **Add to Cart**—Add the selected part and associated metadata to a purchase order PDF.

- **3D Annotation Name**—Name of the target annotation.
- **Layers**—The PDF layer at which this button applies.

OK **Change Material**—A control to change the diffuse RGB color of a material in a 3D scene.

- **3D Annotation Name**—Name of the target annotation.
- **Material Name**—Name of the target material.
- **Diffuse Color**—RGB color of the target material.
- **Layers**—The PDF layer at which this button applies.

TI **Part Metadata**—Displays the metadata associated with the 3D part.

- **3D Annotation Name**—Name of the target annotation.
- **Metadata Name**—Key value name.
- **Parse Metadata from Line**—The line number from which to display the metadata.
- **Parse Metadata to Line**—The line number to which to display the metadata.

Note: The setting -1, indicates 'show all metadata', or displays all metadata to the end of a metadata block.

Copyright © Right Hemisphere 2007. All Rights Reserved.

- **Layers**—The PDF layer at which this button applies.

Standard View Controls

Standard view buttons are used to activate a specific model view of the 3D scene.

Interface

OK **Left View** —Displays the left view of a 3D scene.

- **3D Annotation Name**—Name of the target annotation.
- **Layers**—The PDF layer at which this button applies.

OK **Right View**—Displays the right view of a 3D scene.

- **3D Annotation Name**—Name of the target annotation.
- **Layers**—The PDF layer at which this button applies.

OK **Top View**—Displays the top view of a 3D scene.

- **3D Annotation Name**—Name of the target annotation.
- **Layers**—The PDF layer at which this button applies.

OK **Bottom View**—Displays the bottom view of a 3D scene.

- **3D Annotation Name**—Name of the target annotation.
- **Layers**—The PDF layer at which this button applies.

OK **Front View**—Displays the front view of a 3D scene.

- **3D Annotation Name**—Name of the target annotation.
- **Layers**—The PDF layer at which this button applies.

OK **Aft View**—Displays the rear view of a 3D scene.

- **3D Annotation Name**—Name of the target annotation.
- **Layers**—The PDF layer at which this button applies.

OK **Iso View**—Displays an isometric view of a 3D scene.

- **3D Annotation Name**—Name of the target annotation.
- **Layers**—The PDF layer at which this button applies.

Copyright © Right Hemisphere 2007. All Rights Reserved.

Step Controls

Steps buttons are used to help produce PDF documents relating to steps (on page 194) workflows. For example, the assembly or disassembly process of a 3D model.

Interface

OK **First Step**—Plays the first step of the procedure.

- **3D Annotation Name**—Name of the target annotation.
- **Layers**—The PDF layer at which this button applies.

OK **Next Step**—Plays the next step in the procedure.

- **3D Annotation Name**—Name of the target annotation.
- **Layers**—The PDF layer at which this button applies.

OK **Play All Steps**—Plays all steps of the procedure in a sequential order.

- **3D Annotation Name**—Name of the target annotation.
- **Layers**—The PDF layer at which this button applies.

OK **Rewind All Steps**—Resets all steps of the procedure.

- **3D Annotation Name**—Name of the target annotation.
- **Layers**—The PDF layer at which this button applies.

OK **Previous Step**—Plays the previous step in the procedure.

- **3D Annotation Name**—Name of the target annotation.
- **Layers**—The PDF layer at which this button applies.

OK **Last Step**—Plays the last step in the procedure.

- **3D Annotation Name**—Name of the target annotation.
- **Layers**—The PDF layer at which this button applies.

OK **Named Step**—Activates the selected custom named step. To ensure that the step is activated you must exactly match the “Step Name” within Deep Exploration to the “Step Name” field in the control dialog.

Note: The step name is case-sensitive.

- **3D Annotation Name**—Name of the target annotation.
- **Step Name**—The custom name of the step. (The step name is case-sensitive).
- **Layers**—The PDF layer at which this button applies.

OK **Play Current Step**—Plays the current step.

- **3D Annotation Name**—Name of the target annotation.
- **Layers**—The PDF layer at which this button applies.

OK **Pause Current Step**—Pauses the current step animation sequence.

- **3D Annotation Name**—Name of the target annotation.
- **Layers**—The PDF layer at which this button applies.

OK **Rewind Current Step**—Rewinds the current step animation sequence.

Copyright © Right Hemisphere 2007. All Rights Reserved.

- **3D Annotation Name**—Name of the target annotation.
- **Layers**—The PDF layer at which this button applies.

Steps Name Block—The custom name of the step.

- **3D Annotation Name**—Name of the target annotation.
- **Layers**—The PDF layer at which this button applies.

Steps Description Block—A detailed description of the step.

- **3D Annotation Name**—Name of the target annotation.
- **Layers**—The PDF layer at which this button applies.

List Step Names—Lists step names only. That is, no numbers.

- **3D Annotation Name**—Name of the target annotation.
- **Layers**—The PDF layer at which this button applies.

Steps Counter Block—A counter that shows the number of the current step.

- **3D Annotation Name**—Name of the target annotation.
- **Layers**—The PDF layer at which this button applies.

List Step Numbers—Displays the number of each step contained in the current file. These numbers are generated automatically. For example, the first step is Step 1, the second step is Step 2, and so on. When the file is saved into .pdf format, you select from a list of step numbers to display the related content.

- **3D Annotation Name**—Name of the target annotation.
- **Layers**—The PDF layer at which this button applies.

Step Metadata—Displays the metadata content related to the step metadata keyword.

- **3D Annotation Name**—Name of the target annotation.
- **Metadata name to display**—Displays the metadata content related to a global or step metadata keyword. That is, for the current file. If the keyword exists in the file, the related content is displayed. Otherwise, no content is displayed. To ensure the content is displayed, you must name the object with the metadata keyword name; this name is located in the step description (on page 361).
  - **PDF_CAMERA_MODE**—Sets the camera to 'Walk', 'Pan', 'Rotate' or 'Spin' mode, depending on step metadata content.

Note: 'Spin' mode is available to Acrobat 8.0 and 8.1 users only.

  - **PDF_LAYERS_SET**—Shows only this layer and hides all others.
  - **PDF_LAYERS_SHOW**—Shows layers, without hiding any currently visible layers.
  - **PDF_LAYERS_HIDE**—Hides layers, without showing any currently hidden layers.
- **Use global metadata**—Yes or No to determine whether global metadata is used. If you are using step metadata, this will be No.
- **Layers**—The PDF layer at which this button applies.

Copyright © Right Hemisphere 2007. All Rights Reserved.

Layer Controls

Layer controls are used to manage the way that model layers from Deep Exploration can be seen and controlled in a PDF document.

Interface

 **Layers Drop Down**—Controls the layers.

- **3D Annotation Name**—Name of the target annotation.
- **Layers**—The PDF layer at which this button applies.

 **Named Layer**—Activate a 'named' layer.

- **3D Annotation Name**—Name of the target annotation.
- **Layer Name**—The name of the customized layer. This name displays on the button.
- **Layers**—The PDF layer at which this button applies.

 **Layers List**—Displays a list of all the model layers contained within the current file, for the selected part.

- **3D Annotation Name**—Name of the target annotation.
- **Layers**—The PDF layer at which this button applies.

 **Layers Radio**—Offers selection as to which layer to display, up to a maximum of ten.

Note: If five layers are nominated, only five radio buttons will display.

- **3D Annotation Name**—Name of the target annotation.
- **Button 1 Layer**—The name of the customized layer. This name displays next to the button.
- **Button 2 Layer**—The name of the customized layer. This name displays next to the button.
- **Button 3 Layer**—The name of the customized layer. This name displays next to the button.
- **Button 4 Layer**—The name of the customized layer. This name displays next to the button.
- **Button 5 Layer**—The name of the customized layer. This name displays next to the button.
- **Button 6 Layer**—The name of the customized layer. This name displays next to the button.
- **Button 7 Layer**—The name of the customized layer. This name displays next to the button.
- **Button 8 Layer**—The name of the customized layer. This name displays next to the button.
- **Button 9 Layer**—The name of the customized layer. This name displays next to the button.
- **Button 10 Layer**—The name of the customized layer. This name displays next to the button.
- **Layers**—The PDF layer at which this button applies.

 **Layer Description Block**—Displays the customized description of the layer.

- **3D Annotation Name**—Name of the target annotation.
- **Layers**—The PDF layer at which this button applies.

Copyright © Right Hemisphere 2007. All Rights Reserved.

Editing Properties

A number of other options are available to control the appearance of buttons and text boxes. These options are called object properties, and are available for editing when the object is selected.

Procedure

To edit the properties of a field, button, list box or combo box:

- Click  on the Advanced Editing toolbar to invoke the select object tool.
- Double-click the object to edit.

Button Properties

A number of other options are available in the Button Properties dialog. These determine how a button functions, and how it displays in a PDF document.

Interface

General—Determines the general properties for the button. For example, whether the button is visible in the PDF document.

- **Name**—The unique identifying name of the button.

Note: All controls must have unique names when creating PDF Templates.

- **Tooltip**—Additional information describing the button or function. This produces a small pop-up window containing the descriptive text when a pointer or other cursor controlled by a mouse passes over or rests on the button.
- **Form Field**—The way in which the button is presented in the document.
  - **Visible**—The button displays in the document.
  - **Hidden**—The button does not display in the document.
  - **Visible but does not print**—The button displays in the document but does not display when it is printed.
  - **Hidden but printable**—The button does not display in the document but can be printed.
- **Read Only**—Indicates a read only field.
- **Orientation**—Controls the angle on which this button displays.
- **Required**—Indicates a required field.
- **Locked**—The information on this tab is locked.

Appearance—Determines the appearance of the button, in regards color and font size.

- **Border Color**—The color of the border lines.
- **Line Thickness**—The width of the border line.
- **Fill Color**—The color of the fill.
- **Line Style**—The style of line that forms the border.
- **Font Size**—The size of the font.
- **Text Color**—The color of the text on the button.
- **Font**—The font used for the text on the button.
- **Locked**—The information on this tab is locked.

Copyright © Right Hemisphere 2007. All Rights Reserved.

Options—Further options relating to the button. For example, the way in which the button works, and its placement on the page.

- **Layout**—Determines the icon and label placement on the button.
  - **Label only**.
  - **Icon only**.
  - **Icon top, label bottom**.
  - **Label top, icon bottom**.
  - **Icon left, label right**.
  - **Label left, icon right**.
  - **Label over icon**.
- **Behavior**—The way in which the button works. For example, push.
- **State**—The appearance of the button. For example, up
- **Label**—The name that displays on the button.
- **Icon**—The icon that displays on the button.
- **Locked**—The information on this tab is locked.

Actions—Options to associate an action with the button.

- **Select Trigger**—Name of the annotation.
- **Select Action**—The action which the button performs.
- **Add**—Use to add a further action.
- **Actions**—Lists the current associated actions.
- **Locked**—The information on this tab is locked.

Text Field Properties

A number of other options are available in the Text Field Properties dialog. These determine how a text field displays in a PDF document.

Interface

General—Determines the general properties for the text field. For example, whether the text field is visible in the PDF document.

Appearance—Determines the appearance of the text field, in regards color and font size.

Options—Further options relating to the text field. For example, the placement of the text field on the page.

Actions—Options to associate an action with the text field.

Format—Used to assign a particular format to the text field.

Validate—Options to assign validation options to the text field.

Calculate—Options to assign calculations to the text field.

Copyright © Right Hemisphere 2007. All Rights Reserved.

Combo Box Properties

A number of other options are available in the Combo Box Properties dialog. These determine how a combo box displays in a PDF document, and the values available for selection.

Interface

General—Determines the general properties for the combo box. For example, whether the combo box is visible in the PDF document.

Appearance—Determines the appearance of the combo box, in regards color and font size.

Options—Further options relating to the combo box. For example, the available values for the combo box, whether custom text is allowed, and the combo box's placement on the page.

Actions—Options to associate an action with the combo box.

Format—Used to assign a particular format to the combo box.

Validate—Options to assign validation options to the combo box.

Calculate—Options to assign calculations to the combo box.

List Box Properties

A number of other options are available in the List Box Properties dialog. These determine how a list box displays in a PDF document, and the values available for selection.

Interface

General—Determines the general properties for the list box. For example, whether the list box is visible in the PDF document.

Appearance—Determines the appearance of the list box, in regards color and font size.

Options—Further options relating to the list box. For example, the available values for the list box, and the list box's placement on the page.

Actions—Options to associate an action with the list box.

Format—Used to assign a particular format to the list box.

Validate—Options to assign validation options to the list box.

Calculate—Options to assign calculations to the list box.

Copyright © Right Hemisphere 2007. All Rights Reserved.

Publishing to PDF

Using the PDF Publishing Module, you can save files (on page 55) containing 2D and 3D content to the .pdf format by using a PDF template.

When you choose to save a file to this format, you can modify the export properties and apply them to the file. For example, you can choose the template with which to save the file, and you can include customized and parts list metadata in the document's properties. These properties are described in detail in:

- Adobe Portable Document 3D Export (on page 239)
- Z-Buffer Render Settings Dialog (on page 455)
- Ray-Trace Render Settings Dialog (on page 455)
- Vector Illustration Settings Dialog (on page 456)
- Metadata Dialog (on page 242).

For further information regarding 3D interactivity within PDF documents, please see the Adobe Acrobat Professional Help delivered with Adobe Acrobat 3D.

Procedure

To publish to a PDF document:

1. Open and modify the file as you require.
2. Do one of the following:
   - Choose **File > Save As** on the menu bar.
   - Click **Save As** on the Standard toolbar.
3. Browse for the directory where you want to save the file.
4. Enter a name for the file.
5. Select 'Adobe Portable Document 3D (*.pdf)' as the format in which you want to save the file.
6. Do one of the following:
   - Click **Settings**, modify the properties as required, and then click **OK**.
   - Click **Save**.

Adobe Portable Document 3D Export (.pdf)

You can save files to the Adobe Portable Document (.pdf) format with the PDF Publishing Module (on page 223). Most 3D content contained within these files is converted to the Universal 3D (.u3d) format (on page 532).

The .pdf file format (Portable Document Format), developed by Adobe, is used for representing documents in a manner that is independent of the original application software, hardware, and operating system used to create those documents. A .pdf file can describe documents containing any combination of text, graphics, and images in a device independent and resolution independent format.

Note: The .u3d format, adopted by Adobe, is required and used as the 3D publishing format in Adobe Acrobat.

For information regarding 3D interactivity within PDF documents, please see the Adobe Acrobat Professional Help delivered with Adobe Acrobat 3D.

For further information on using files, please see Opening Files (on page 39), Importing Files (on page 40),PDF Publishing Module V2.0 (on page 223) and Saving Files (on page 55).

Copyright © Right Hemisphere 2007. All Rights Reserved.

Interface

PDF Template and Target—Used to view and select the template (on page 223) on which to base the new PDF document.

- **Preview**—Displays a preview of the selected template.
- **Name**—The names of the available templates.
- **Description**—The description of the selected template.
- **Use external template**—Used to select the external template on which to base the PDF document.
  - **File name**—The file name and path of the template.
  - **Browse**—Used to browse for and select the template.
- **3D Model or 2D Image Target**—Used to select the target location of the model or image in the PDF document.
  - **Field name**—The name of the field in which the graphic will display. For example, 3D_Annotation1.
  - **Refresh**—Refreshes the display.
- **Start Adobe Acrobat after Publishing**—Opens Adobe Acrobat and displays the PDF document after the file is exported to the .pdf format.

Note: The Adobe application that opens depends on what is installed on your computer.

Publishing Options—Used to establish publishing settings for the PDF.

- **3D Publishing Options**—Additional settings relating to 3D models. These options determine the way in which the 3D model displays, whether the 3D model is activated when the PDF is opened, and whether associated model views are included.
  - **Preview Image**—Determines what displays in the 3D model area of the PDF.
    - **Raster image via Software Z-Buffer Render**—Creates a hybrid file using the Software Z-buffer renderer.
    - **Raster image via Ray-Trace Render**—Creates a hybrid file using the Raytracer renderer. Note that this option is not suitable for a 3D model with callouts.
    - **External Raster image**—Displays an external raster image instead of the 3D model.
    - **External Vector File (in .PDF)**—Displays an external vector image instead of the 3D model.
    - **Vector image via Illustration Module**—Displays the image as a vector illustration of the current view of the scene. Otherwise, the image is displayed as a raster illustration.
  - **Settings** (on page 456)—Opens the appropriate Settings dialog and is used to establish settings for the type of publishing option that you have selected. This option is not available when Preview Image is set to either of the external publishing options.
  - **External File**—The file name and path of the external raster image. This option is only available when Preview Image is set to External Raster Image or External Vector File (in PDF).
  - **Browse**—Used to browse for and select the file. This option is only available when the Preview type is set to External Raster Image.
  - **Activate 3D model**—Automatically activates the 3D model when the PDF document is opened. Otherwise, the 2D image is displayed.
  - **Save model views to Adobe Acrobat** (on page 77)—Saves all model views within the file for viewing in Adobe Acrobat.

Copyright © Right Hemisphere 2007. All Rights Reserved.

  - **Format**—Used to select the type of U3D format in which to produce the file.
  - **Texture Quality**—Used to nominate the quality of the textures in the file.
  - **Save Normals**—Saves all normals.
- **2D Image Publishing Options**—Additional settings relating to 2D images. These options determine the way in which the 2D image displays.
  - **Image Format**—The way in which the 2D image displays in the published PDF.
    - **Raster image via Software Z-Buffer Render**—Creates a hybrid file using the Software Z-buffer renderer.
    - **Raster image via Ray-Trace Render**—Creates a hybrid file using the Raytracer renderer.
    - **Vector image via 2D PDF Module**—Displays the image as a vector image. Otherwise, the image is displayed as a raster image. Note that this option is only available for 2D vector .DWG or .DWF files.
    - **Vector image via Illustration Module**—Displays the image as a vector illustration of the current view of the scene. Otherwise, the image is displayed as a raster illustration.
  - **Settings** (on page 456)—Opens the appropriate Settings dialog and is used to establish settings for the type of publishing option that you have selected. This option is not available when Preview Image is set to either of the external publishing options.

PDF Specific—Additional settings relating to all models and images.

- **XFDF file name**—Used to attach an XFDF file containing data to autofill fields in the PDF during publishing.
- **Browse**—Used to browse for and select the file.
- **Attachments**—Used to attach files to the PDF during publishing (Word, Powerpoint, Catia, any file on disk).
- **Browse**—Used to browse for and select the file.
- **Doc Level JS**—Used to add custom JavaScripts to the PDF at document level.
- **Browse**—Used to browse for and select the file.
- **Page Level JS**—Used to add custom JavaScripts to the PDF at Page level.
- **Browse**—Used to browse for and select the file.
- **3D Level JS**—Used to add custom JavaScripts to the PDF at 3D level.
- **Browse**—Used to browse for and select the file.
- **Add Watermark with Following Text**—Used to create text on a printed watermark.
- **Watermark Text**—The text to print in the watermark.
- **Protect PDF with following password**—Used to set a protection password for the PDF.
- **Password**—The protection password.
- **Enable PDF for Merging**—Creates unique names for all RH Acrobat controls so that multiple interactive PDF documents can be merged together in Acrobat without causing conflicts.
- **Metadata** (on page 242)—Opens the Metadata dialog and is used to add information to the PDF document XMP (Extensible Metadata Platform) properties.

OK—Closes the dialog and applies the settings. Any changes made to the settings are saved.

Cancel—Closes the dialog. Any changes made to the settings are lost.

Help—Opens the relevant Help topic.

Copyright © Right Hemisphere 2007. All Rights Reserved.

Metadata Dialog

Save to .pdf format > Settings > PDF Specific tab > Metadata

The Metadata dialog is used to establish the information displayed in the document properties when a model is saved to the .pdf format.

Interface

Title—The document title that is displayed in the 'Document Title' field of the Acrobat 3D Additional Metadata dialog.

Author—The document author's name that is displayed in the document's Author property. The current user name is displayed here by default.

Subject—The subject of the scene that is displayed in the document's Subject property.

Note: This is used in the 'Description' field in the Acrobat 3D Additional Metadata dialog.

Keywords—Additional scene information that is displayed in the document's Keywords property.

Auto-generate title—Automatically displays the document's file name and extension in the document's Title property. Any text entered in the Title field is ignored.

Auto-generate subject—Automatically displays the document's file name, and associated template name in the document's Subject property. Any text entered in the Subject field is ignored.

Add parts list to keywords—The model's parts list that is displayed in the document's Keywords property. This information is displayed after any information entered in the Keywords field.

OK—Closes the dialog and applies the settings. Any changes made to the settings are saved.

Cancel—Closes the dialog. Any changes made to the settings are lost.

Help—Opens the relevant Help topic.

Copyright © Right Hemisphere 2007. All Rights Reserved.

List of supplied 2D Templates

The following 2D standard technical templates are available with the PDF Publishing module. This list is organized alphabetically.

Template Name	Type	Size	Description
2D ANSI Size A Landscape 11 X 8.5	2D	11 Inches X 8.5 Inches.	This basic template is used for Technical Illustrations.
2D ANSI Size A Portrait 8.5 X 11	2D	8.5 Inches X 11 Inches	This basic template is used for Technical Illustrations.
2D ANSI Size B Landscape 17 X 11	2D	17 Inches X 11 Inches	This basic template is used for Technical Illustrations"
2D ANSI Size B Portrait 11 X 17	2D	11 Inches X 17 Inches.	This basic template is used for Technical Illustrations.
2D ANSI Size C Landscape 22 X 17	2D	22 Inches X 17 Inches	This basic template is used for Technical Illustrations.
2D ANSI Size C Portrait 17 X 22	2D	17 Inches X 22 Inches	This basic template is used for Technical Illustrations.
2D ANSI Size D Landscape 34 X 22	2D	34 Inches X 22 Inches	This basic template is used for Technical Illustrations.
2D ANSI Size D Portrait 22 X 34	2D	22 Inches X 34 Inches	This basic template is used for Technical Illustrations.
2D ANSI Size E Landscape 44 X 34	2D	44 Inches X 34 Inches	This basic template is used for Technical Illustrations.
2D ANSI Size E Portrait 34 X 44	2D	34 Inches X 44 Inches	This basic template is used for Technical Illustrations.
2D Arch Size A Landscape 12 X 9	2D	12 Inches X 9 Inches	This basic template is used for Architectural Drawings.
2D Arch Size A Portrait 9 X 12	2D	9 Inches X 12 Inches	This basic template is used for Architectural Drawings.
2D Arch Size B Landscape 18 X 12	2D	18 Inches X 12 Inches	This basic template is used for Architectural Drawings.
2D Arch Size B Portrait 12 X 18	2D	12 Inches X 18 Inches	This basic template is used for Architectural Drawings.
2D Arch Size C Landscape 24 X 18	2D	24 Inches X 18 Inches	This basic template is used for Architectural Drawings.
2D Arch Size C Portrait 18 X 24	2D	18 Inches X 24 Inches	This basic template is used for Architectural Drawings.
2D Arch Size D Landscape 36 X 24	2D	36 Inches X 24 Inches	This basic template is used for Architectural Drawings.
2D Arch Size D Portrait 24 X 36	2D	24 Inches X 36 Inches	This basic template is used for Architectural Drawings.
2D Arch Size E Landscape 48 X 36	2D	48 Inches X 36 Inches	This basic template is used for Architectural Drawings.
2D Arch Size E Portrait 36 X 48	2D	36 Inches X 48 Inches	This basic template is used for Architectural Drawings.
2D ISO Size A0 Landscape 1189 X 841	2D	1189 mm X 841 mm	This basic template is used for Technical Illustrations.
2D ISO Size A0 Portrait 841 X 1189	2D	841 mm X 1189 mm	This basic template is used for Technical Illustrations.
2D ISO Size A1 Landscape 841 X 594	2D	841 mm X 594 mm	This basic template is used for Technical Illustrations.
2D ISO Size A1 Portrait 594 X 841	2D	594 mm X 841 mm	This basic template is used for Technical Illustrations.
2D ISO Size A2 Landscape 594 X 420	2D	594 mm X 420 mm	This basic template is used for Technical Illustrations.
2D ISO Size A2 Portrait 420 X 594	2D	420 mm X 594 mm	This basic template is used for Technical Illustrations.
2D ISO Size A3 Landscape 420 X 297	2D	420 mm X 297 mm	This basic template is used for Technical Illustrations.
2D ISO Size A3 Portrait 297 X 420	2D	297 mm X 420 mm	This basic template is used for Technical Illustrations.
2D ISO Size A4 Landscape 297 X 210	2D	297 mm X 210 mm	This basic template is used for Technical Illustrations.
2D ISO Size A4 Portrait 210 X 297	2D	210 mm X 297 mm	This basic template is used for Technical Illustrations.
2D 4 Tab Views	2D	11 Inches X 8.5 Inches	This template contains 4 2D images (2D Annotations) on 4 separate layers. Each layer's visibility is controlled by a button to switch between the four layers, thus enabling 4 2D images per PDF document page.
2D Basic Landscape Letter Template	2D	11 Inches X 8.5 Inches	This template contains a single 2D image (2D Annotation) with Logo and Gradient Background.
2D Basic Portrait Letter Template	2D	8.5 Inches X 11 Inches	This template contains a single 2D image (2D Annotation) with Logo and Gradient Background.

Copyright © Right Hemisphere 2007. All Rights Reserved.

List of supplied 3D Templates

The following 2D standard technical templates are available with the PDF Publishing module. This list is organized alphabetically.

Template Name	Type	Size	Description
3D Basic Landscape Letter Template	3D	11 Inches X 8.5 Inches	This template contains a single 3D Scene(3D Annotation) with Logo and Gradient Background and no 3D controls.
3D Basic Portrait Letter Template	3D	8.5 Inches X 11 Inches	This template contains a single 3D Scene(3D Annotation) with Logo and Gradient Background and no 3D controls.
3D Basic Views Landscape Letter Template	3D	11 Inches X 8.5 Inches	This template contains a single 3D Scene(3D Annotation) with Logo and Gradient Background and standard view buttons for Left, Right, Top, Bottom, Front, Aft and Iso.
3D Basic Views Portrait Letter Template	3D	8.5 Inches X 11 Inches	This template contains a single 3D Scene(3D Annotation) with Logo and Gradient Background and standard view buttons for Left, Right, Top, Bottom, Front, Aft and Iso.
3D Architecture Walkthrough and Views	3D	11 Inches X 8.5 Inches	This template is used to create Walkthroughs via Steps including Descriptions as well as Model Views including Descriptions
3D Catia v5 PMI Template	3D	11 Inches X 8.5 Inches	This template is used to create a simple PMI PDF from Catia v5 PMI data. A Bill of Material List allows parts to be selected and then Model Views can be selected to show the PMI for each view.
3D JT PMI Template	3D	17 Inches X 11 Inches	This template is used to create a simple PMI PDF from JT PMI data. A Bill of Material List allows parts to be selected and then Model Views can be selected to show the PMI for each view.
3D Steps BOM List Template	3D	11 Inches X 8.5 Inches	This template is used to create Steps with Names and Descriptions. This template also includes a BOM List with part quantities.
3D Steps Parts List Template	3D	11 Inches X 8.5 Inches	This template is used to create Steps with Names and Descriptions. This template also includes a Parts List.
3D Steps Portrait Template	3D	8.5 Inches X 11 Inches	This template is used to create Walkthroughs via Steps with Descriptions. This template also includes Model Views with Descriptions.
3D Simple Animation Template	3D	11 Inches X 8.5 Inches	This template is used to create a basic animation PDF document and includes Play, Pause, Rewind, Fast Forward and Animation Ending controls.
3D Steps Simple Template	3D	11 Inches X 8.5 Inches	This template is used for simple Step (on page 194) workflows, including Step Names and Step Descriptions text fields.

Copyright © Right Hemisphere 2007. All Rights Reserved.

Closing Deep Exploration

Menu bar > File > Exit
Click Close button

Deep Exploration can be closed in one of two ways, similar to the functionality in most Windows applications. If files are being transferred when you close the application, the transfer is cancelled.

Procedure

To close Deep Exploration, do one of the following:

- Click **File > Exit** on the menu bar.
- Click the **Close** button  in the top, right corner of the application.

Copyright © Right Hemisphere 2007. All Rights Reserved.

User Interface

The software's user interface provides multiple ways to achieve the same goals. It consists of a number of components including the menu bar, the Explorer bar, Information bar, File list, Status bar, and Animation controls. There are also a number of different toolbars, a viewport, and various right-click menus.

Many of the components can be resized, moved, floated, docked, rearranged, and closed (on page 422) similar to the functionality in most Windows applications. For example, you can resize the Explorer bar by dragging the bar's edges, and you can drag files and folders within the Folders panel. Components are displayed as docked by default and have a Windows-type interface.

See the topics referenced below for detailed information on all of the user interface components.

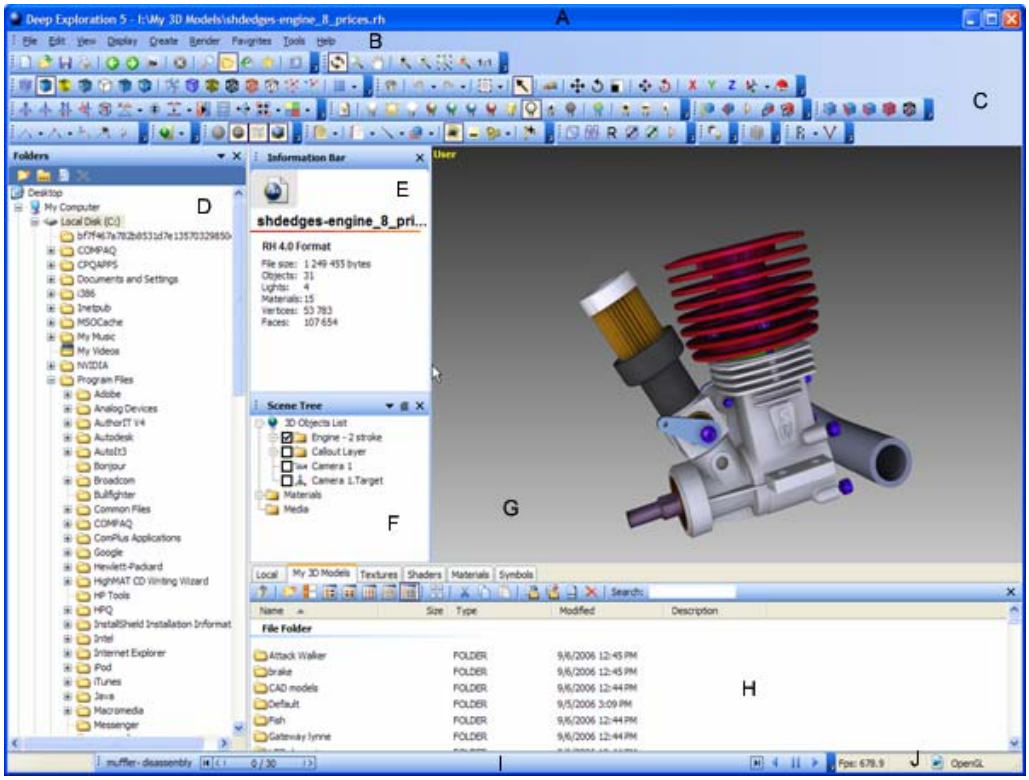

A: Application title bar
B: Menu bar
C: Controls and toolbars
D: Explorer bar
E: Information bar
F: Scene Components panel
G: Workspace
H: File list
I: Animation controls
J: Status bar

Interface

Application title bar—The current file name, path, and protection status.

Menu bar (on page 248)—Provides access to the main menu commands.

Controls (on page 313)—Tools that give you added functionality for managing and modifying files and file display.

Toolbars (on page 363)—Sets of buttons for commands relating to standard and additional module (on page 13) functionality.

Copyright © Right Hemisphere 2007. All Rights Reserved.

Explorer bar (on page 300)—Used to display the Folders panel, the Favorites and History lists, the Search panel, and the File list tabs.

Information bar (on page 323)—Displays various file, object, and material information relating to the current file depending on the viewport selection.

Scene Components panel (on page 329)—Comprises a number of components including the Scene and Animation trees, the Materials list, and the Parts and Layers panels. It presents, and is used to control all of the scene's 3D objects, materials, parts, animation, and layers from within a tree-view hierarchy.

Workspace (on page 299)—Comprises one or more viewports (on page 299) used to view and modify the currently opened file. For example, a 3D scene or 2D image.

File list (on page 384)—Displays all files and folders contained within the current folder, all files that match the search criteria after performing a search, all files contained within the 'My 3D Models' folder, and all the available material, texture, symbol, and shader files. It can be used to perform a number of functions including establishing file properties, refining searches (on page 51), dragging textures, symbols, and shaders onto models, and generating thumbnails.

Status bar (on page 421)—Displays various information relating to the current file and display renderer (on page 259).

Animation controls (on page 314)—Provides controls for animated scenes.

Right-click menus (on page 390)—Sets of commands relating to the standard functionality.

Copyright © Right Hemisphere 2007. All Rights Reserved.

Menu Bar

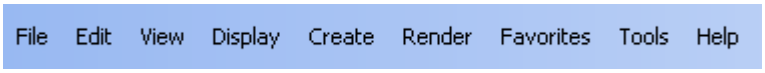

The menu bar is located directly under the main window title bar. The menu bar uses standard Microsoft Windows conventions.

The available commands differ depending on the scene selection, the current format, the selected display renderer (on page 259), the graphics card installed on your computer, and the Explorer bar display (on page 300). Others only become available if you if the current 3D file is animated. For example, if you have a 2D file open and the History list displayed, the File menu commands, Merge File, Save Frames, Search Active Folder, and Go To Folder commands are inactivate. However, if you have an animated 3D file open and the Folders panel displayed, all commands are active.

Many of these commands are global and override the viewports commands. For example, if you display a viewport in the Wireframe render mode and another viewport in the Line Illustration mode, selecting the Solid render mode from the Display menu displays all viewports in Solid mode.

Interface

File Menu (on page 248)

Edit Menu (on page 254)

View Menu (on page 255)

Display Menu (on page 257)

Create Menu (on page 262)

Rendering Menu (on page 265)

Favorites Menu (on page 271)

Tools Menu (on page 272)

Help Menu (on page 297)

Copyright © Right Hemisphere 2007. All Rights Reserved.

File Menu

Menu bar > File

The File menu is used to manage 2D and 3D files. The available options differ depending on the current file type, whether the file is animated, and on the current of Explorer bar view (on page 300).

Interface

New—Opens a new empty scene.

Open (on page 249)

Merge File (on page 250)

Save As (on page 250)

Save Frames (on page 251)

Batch Operations (on page 251)

Search Active Folder—Opens the Search Active Folder and is used to search through the folder and all its sub-folders for files.

Go To Folder—Opens the 'Go To Folder' dialog and is used to move to the folder of your choice.

Printer Setup—Lets you set up your page layout.

Print—Prints the current image on the selected printer.

Always On Top—Specifies that Deep Exploration is placed over all windows and stays above them, even when the application is deactivated.

Exit (on page 245)—Quits the program. If files are being transferred when you close the application, the transfer is cancelled.

Open

Menu bar > File menu > Open

You can use the Open command to open supported files (on page 39). The Open dialog is displayed from where you can locate the file you want to open. You can also modify properties for selected file types (format) and import the files (on page 40).

Interface

Look in—The folder that contains the file you want to open.

File name—The name of the file you want to open.

Files of type—The format of the file you want to open.

Settings—Opens the Import Properties dialog for the selected file type to establish settings and import the file. Note that you must select a file type that contains import properties in the 'Files of type' field for this button to be enabled.

Open—Opens the selected file, or if you have modified the file's import properties, imports the file.

Cancel—Cancels the process and closes the dialog. Any changes made to the settings are lost.

Help—Opens the relevant Help topic.

Copyright © Right Hemisphere 2007. All Rights Reserved.

Merge File

Menu bar > File menu > Merge File

You can use the Merge File command to merge files (on page 53) into the current scene. The Open dialog is displayed from where you can locate the file you want to merge.

Various merge options can be selected to choose the components you want to merge and how they are imported into the current file.

You can also merge objects by dragging files from the File list.

Interface

Look in—The folder that contains the file you want to merge.

File name—The name of the file you want to merge.

Files of type—The format of the file that you want to merge.

Merge Options (on page 90)—Used to establish settings for merging the files.

Open—Opens the selected file, or if you have modified the file's import properties, imports the file.

Cancel—Cancels the process and closes the dialog. Any changes made to the settings are lost.

Help—Opens the relevant Help topic.

Settings—Opens the Import Properties dialog for the selected file type to establish settings and import the file. Note that you must select a file type that contains import properties in the 'Files of type' field for this button to be enabled.

Save As

Menu bar > File menu > Save As

The Save As dialog is used to establish save settings for the selected file type (format). The available options differ depending on the type of file that you are saving (on page 55); whether the current file is a 2D image or a 3D model. For example, if you save a file in the .jpg format, the Image Quality option becomes available.

Interface

File name—The name for the saved file.

Save as type—The format in which you want to save the file.

Objects to save—Used to select the objects you want to save in the file.

- **All scene objects—**Saves all scene objects.
- **Visible objects only—**Saves only visible objects.
- **Active scene objects only—** Saves only active objects.

Save—Saves the file in the selected format with the current export settings. Those same settings are then applied whenever a file is saved to that same format until they are next modified.

Cancel—Closes the dialog. Any changes made to the settings are lost.

Help—Opens the relevant Help topic.

Show Export Dialog—Opens the Export Properties dialog for the selected file type to establish settings for the file.

Copyright © Right Hemisphere 2007. All Rights Reserved.

Save Frames

Menu bar > File menu > Save Frames

If a file has animation, you can use the Save Frames command to generate sequences of 3D files with separate files for each animation frame. The Save As dialog is displayed from where animation options (on page 315) can be set.

Interface

File name—The name for the saved file.

Save as type—The format in which you want to save the file.

Objects to save—Used to select the objects you want to save in the file.

- **All scene objects—**Saves all scene objects.
- **Visible objects only—**Saves only visible objects.
- **Active scene objects only—** Saves only active objects.

Time Output—Used to specify the animation range.

- **All animation sequence [current number of frames]—**Saves the total number of frames as individual image files. That is, as a sequence of images. The number of files that are created equals 'seconds duration*FPS'. For example, if the animation is five seconds long and the FPS=30, 150 files are created.
- **Range—**Used to specify the first and last frame numbers to save that number of image files.
- **Custom frames**—Used to specify a custom number of frames to save as individual image files. That is, as a sequence of images. For example, if the animation is five seconds long and the FPS=30, usually 150 files would be created. However, if you enter 50 in the Frames field, only 50 files are created.
  - **Frames**—Determines the number of frames to save as individual image files.

Save—Saves the file in the selected format with the current export settings. Those same settings are then applied whenever a file is saved to that same format until they are next modified.

Cancel—Closes the dialog. Any changes made to the settings are lost.

Help—Opens the relevant Help topic.

Settings—Opens the Export Properties dialog for the selected file type to establish settings for the file.

Batch Operations

Menu bar > File > Batch Operations

The Batch Operations menu is used to convert, or render and convert all files in the File list (excluding CAD files). Note that for 3D files, conversion can be performed on a maximum of 25 files.

Note: You can also access these commands via a Folders panel right-click menus (on page 402).

Interface

Convert 3D Files (on page 252)—Used to convert 3D files to a 3D format of your choice.

Render 3D Files (on page 252)—Used to render and convert 3D files to a 2D format of your choice.

Convert 2D Files (on page 253)—Used to convert 2D files to a 2D format of your choice.

Copyright © Right Hemisphere 2007. All Rights Reserved.

Convert 3D Files

Menu bar > File > Batch Operations > Convert 3D Files

The Convert 3D Files command is used to convert 3D files, up to a maximum of 25, to the 3D format of your choice.

The Batch Convert 3D Files dialog displays all the 3D files that are located in the current folder, from where you can select the ones you want to convert.

See also Saving Files (on page 55).

Interface

Save as type—Used to select the type format in which to save the files.

- **Settings** (on page 55)—Opens the Export Properties dialog for the selected file type to establish settings for the file.

Overwrite existing—Used to select the action taken if the file being converted already exists in the destination folder.

- **Replace—**Overwrites the existing file.
- **Ask—**Opens a confirmation dialog when a file already exists from where you can decide the action to take.
- **Skip—**Retains the existing file.
- **Rename—**Renames new files if a file of the same name exists in the destination folder.

Save in—Used to select a destination folder for the files.

- **To same folder—**Saves all files to the original folder.

Select All—Selects all displayed files.

Clear All—Clears all files from selection.

Convert—Converts all selected files to the selected format.

Help—Opens the relevant Help topic.

Render 3D Files

Menu bar > File > Batch Operations > Render 3D Files

The Render 3D Files command is used to render and convert 3D files, up to a maximum of 25, to the 2D format of your choice.

The Batch Render 3D Files dialog displays all the 3D files that are located in the current folder, from where you can select the ones you want to convert.

See also Saving Files (on page 55).

Interface

Save as type—Used to select the type format in which to save the files.

- **Settings** (on page 55)—Opens the Export Properties dialog for the selected file type to establish settings for the file.

Overwrite existing—Used to select the action taken if the file being converted already exists in the destination folder.

- **Replace—**Overwrites the existing file.

Copyright © Right Hemisphere 2007. All Rights Reserved.

- **Ask—**Opens a confirmation dialog when a file already exists from where you can decide the action to take.
- **Skip—**Retains the existing file.
- **Rename—**Renames new files if a file of the same name exists in the destination folder.

Save in—Used to select a destination folder for the files.

- **To same folder—**Saves all files to the original folder.

Camera position—Used to select a camera position for the view when the scene is rendered.

- **Default view—**Sets the default camera position. That is, it uses the camera view from the original file.
- **Active camera in current scene—**Sets the active camera position in the current scene.
- **Available scene camera—**Uses the camera properties from the current scene.

Zoom factor—Use the slider to scale the scene from its original size when rendered.

Render Options (on page 268)—Opens the Properties dialog for the selected display renderer and is used to change the render output details.

Select All—Selects all displayed files.

Clear All—Clears all files from selection.

Render—Renders all selected files to the selected format.

Help—Opens the relevant Help topic.

Convert 2D Files

Menu bar > File > Batch Operations > Convert 2D Files

The Convert 2D Files command is used to convert 2D files to the 2D format of your choice.

The Batch Convert 2D Files dialog displays all the 2D files that are located in the current folder, from where you can select the ones you want to convert.

Interface

Save as type—Used to select the type format in which to save the files.

- **Settings** (on page 55)—Opens the Export Properties dialog for the selected file type to establish settings for the file.

Overwrite existing—Used to select the action taken if the file being rendered already exists in the destination folder.

- **Replace—**Overwrites the existing file.
- **Ask—**Opens a confirmation dialog when a file already exists from where you can decide the action to take.
- **Skip—**Retains the existing file.
- **Rename—**Renames new files if a file of the same name exists in the destination folder.

Save in—Used to select a destination folder for the files.

- **To same folder—**Saves all files to the original folder.

Rescale to—Used to rescale images to a specified size in either pixels or percent depending on your selection.

- **Width—**Determines the width of the image.

Copyright © Right Hemisphere 2007. All Rights Reserved.

- **Height—**Determines the height of the image.

Select All—Selects all displayed files.

Clear All—Clears all files from selection.

Convert—Converts all selected files to the selected format.

Help—Opens the relevant Help topic.

Edit Menu

Menu bar > Edit

The Edit menu is used to perform a number of common functions for 2D and 3D files and folders displayed in the File list, including copying, moving and deleting files.

The available commands differ depending on the file type. Many commands are also available using the right-click menus (on page 390).

Interface

Undo—Displays a list of the last 3D Editor (on page 364) actions performed on the current file, up to a maximum of 10. After you perform an undo action, the next action is displayed.

Redo—Displays a list of the last undo actions performed on the current file, up to a maximum of 10. After you perform a redo action, the next action is displayed.

Cut—Removes the selected file from the File list and places it on the clipboard. You can then paste it to another location. Alternately it removes the selected folder and its contents and place them on the clipboard. You can then move it to another location.

Copy—Copies the selected items to the clipboard.

Copy Image—Copies the current 2D image or rendered scene to the clipboard.

Copy Location—Copies the full path name of the current file to the clipboard so you can easily paste it into any text field.

Paste—Inserts the files you have cut or copied into the selected location.

Select All Files—Selects all files in the File list.

Invert Selection—Selects files which are currently not selected and cancels files which are selected.

Select None—Cancels the selection for all files in the current folder.

Copy To—Copies the selected folder and/or files to another location.

Move To—Moves the selected folder and/or files to another location.

Rename—Used to rename the selected file.

Select Objects (on page 358)—Opens the Select Objects dialog and is used to select objects by name, size, polygon count, etc.

Note: This dialog and can also be accessed from the Scene Components panel (on page 329).

Copyright © Right Hemisphere 2007. All Rights Reserved.

View Menu

Menu bar > View

The View menu is used to view and change the display of the application interface in a number of ways including displaying toolbars, different File list views, messages, animation controls, and the timeline.

Interface

Controls (on page 313) **and Toolbars** (on page 363)—Used to show and hide the controls and toolbars, and to customize the user interface components (on page 422).

Explorer Bar (on page 300)—Used to show and hide the Folders, Search, and Gateway panels, the History and Favorites lists, and the File list tabs.

Viewports (on page 63)—Used to select the viewport layout in which to view the current model.

Status Bar (on page 421)—Displays or hides the status bar.

Thumbnails—Displays a thumbnail view with the name of each file in the File list.

Tiles—Displays a tiled view with the name, format, and size of each file in the File list.

Large Icons—Displays a large icon and file name for each file in the File list.

Small Icons—Displays a small icon and file name for each file in the File list.

List—Displays the file names and icons arranged in columns in the File list.

Details—Displays detailed information for each file in the File list.

Sort File List—Used to arrange the file icons in the File list.

- **By Name—**Arranges file icons by name.
- **By Type—**Arranges file icons by type.
- **By Size—**Arranges file icons by size.
- **By Date—**Arranges file icons by by date.
- **3D Files at Top—**Arranges file icons by with all 3D files at the top of the list.
- **Group View—**Arranges file icons by file type. For example, 3D files, material files, and video files.

Refresh—Refreshes the File list display.

Reload File—Reloads the current file in the viewport.

Messages (on page 256)—Opens the Messages dialog to display status, warning, and error messages relating to the current file.

Zoom Active Viewport—Switches between the active single viewport and the multiple viewport layout.

Zoom to Alternate Monitor—Switches the viewport to a second monitor if one is connected to the same computer. All other user interface elements are displayed on the first monitor.

Full-Screen Mode (on page 80)—Displays the entire viewport across your monitor in Full-screen display mode.

Copyright © Right Hemisphere 2007. All Rights Reserved.

Messages Dialog

Menu bar > View > View Messages
Status bar > Double-click message icon

The Messages dialog displays status, warning, and error messages relating to the current file. For example, the status information such as the file version, author, and revision date for individual files. Any files that are required to open a file, and which cannot be found, are also displayed in the Import Log dialog. For example, material, texture, and DLL files.

Individual messages icons indicate the message type:

=Information

=Warning

=Error

Procedures

To display the Messages dialog, do one of the following:

- Choose View > View Messages on the menu bar.
- Double-click the message icon in the status bar (on page 421).

To copy the message information to the clipboard:

Click **Copy to Clipboard**  on the Messages dialog.

Interface

 **Copy to Clipboard—**Copies the message information to the clipboard. You can then paste it to another location.

OK—Closes the dialog.

Copyright © Right Hemisphere 2007. All Rights Reserved.

Customize Layout Dialog

Menu bar > Tools > Customize Layout
Right-click > Customize Layout
Click vertical customize bar > Customize Layout

The Customize Layout dialog is used to customize menu commands, toolbars, ScreenTips, and shortcut keys.

Note that many options within this dialog relate to identical Windows functionality and as such, are not described here. See Customizing the User Interface (on page 422) for further information.

Procedure

To open the Customize Layout **dialog, do one of the following:**

- Choose **Tools > Customize Layout** on the menu bar.
- Right-click the menu bar and click Customize Layout .
- Click the vertical customize bar on a toolbar or control, and then click **Customize Layout**.

Interface

Toolbars tab—Used to control the default display of the toolbars.

- **Reset**—Restores the default display of the toolbars.

Controls tab—Used to control the default display of the controls.

- **Reset**—Restores the default display of the controls.

Commands tab—Used to control the default display of the menu commands.

Options tab—Used to control the default display of toolbar buttons and menu commands.

- **Reset menu and toolbar usage data**—Restores the toolbar buttons and menu commands. Note that this button affects the buttons shown on toolbars that are not wide enough to display all the buttons. It affects the menu commands shown on the short version of menus only if the 'Display full menus' check box is not selected. This button does not change the location of toolbars, remove any buttons or commands added via the Customize Layout dialog box, or add buttons or commands that you have deleted.

OK—Applies and saves the settings, and then closes the dialog.

Cancel—Closes the dialog. Any changes made to the settings are lost.

Apply—Applies the settings.

Help—Opens the relevant Help topic.

Copyright © Right Hemisphere 2007. All Rights Reserved.

Display Menu

Menu bar > Display

The Display menu is used to apply render modes (on page 70) to the scene, and control various display elements such as the grid and materials. You can also select the display renderer with which to render scenes while you work. Many commands are also available using the right-click menus (on page 390).

Interface

Display Renderer (on page 259)—Used to select the renderer that determines how the scene is rendered while you work.

Transparent Bounding Box—Displays each object as a transparent bounding box.

Solid—Displays each object as solid.

Transparent—Displays each object as transparent.

Solid Wireframe—Displays each object as solid with a wireframe.

Line Illustration—Displays each object as solid, based on the 'background top' color, with outlines. That is, a solid rendering with outlines overlaid on top.

Solid Outline—Displays each object as solid with outlines. That is, only silhouette and crease edges are shown.

Shaded Illustration—Displays each object as solid with outlines with material color overrides. That is, the objects' material colors can be replaced or blended with other colors using the Display Settings panel (on page 321).

Other—Used to select additional render modes.

- **Bounding Box—**Displays each object as a bounding box.
- **Transparent Bounding Box Outline—**Displays each object as a transparent bounding box with outlines along the edges. Each bounding box is axis-aligned (AABB) instead of the object's actual geometry. An AABB is a box with all its edges parallel to the X,Y, and Z axes, and is the smallest box that can completely contain the given object.
- **Transparent Wireframe—**Displays each object as transparent with a wireframe.
- **Wireframe—**Displays each object as a wireframe.
- **Shaded Wireframe—**Displays each object as a shaded wireframe.
- **Hidden Wireframe—**Displays or hides the wireframe view without any visible hidden surfaces. A similar effect can be obtained using Solid Outline mode with outline angle set to '0'.
- **Vertices—**Displays all objects as vertices.
- **Shaded Vertices—**Displays all objects as shaded vertices. The shading colors are based on the object's material colors.

Grid (on page 260)—Used to select and display a floor in the scene. This is helpful in showing the placement of objects.

Note: The time taken to refresh the scene may increase slightly if you display a grid.

Lights (on page 260)—Used to select and display lights in the scene. Active lights are used in Solid or Transparent mode. Some lighting may be useful when examining certain objects to achieve a sense of depth.

Smoothing (on page 261)—Used to select and display smoothing to objects. This is helpful in improving the look of the objects.

Copyright © Right Hemisphere 2007. All Rights Reserved.

Materials (on page 262)—Used to select and display material settings for the scene.

Show Scene Bounding Box—Displays or hides the scene bounding box.

Show Scene Axes—Displays or hides the scene's axes.

Show Cameras and Lights—Displays or hides the scene lights and cameras.

Show Vertices—Displays or hides the object vertices.

Show Back-Facing Geometry—Displays or hides any back-facing geometry.

Show Bones—Displays or hides bones.

Show Paper Size—Displays the model in the selected paper size.

Show Cross Section—Displays and hides the scene's transparent cross section plane.

Show Markups (on page 151)—Displays or hides markups.

Display Renderer

Menu bar > Tools > Options > Render > Select renderer > Configure
Status bar > Click renderer icon > Click renderer

The display renderer determines how scenes are rendered while you work. By default, the Software Z-Buffer renderer is selected.

You can change the display renderer at any time. You can also control the settings for the current display renderer using the Render tab (on page 292) in the Options dialog.

Note: If you have the OpenGL graphics driver installed on your computer, you can enable the 3D graphics acceleration card by selecting the OpenGL display renderer to boost rendering speed by three to five times.

Line styles are supported in all display renderers except DirectX 8.0. For example, .dwg and .dwf files use line styles. You are able to view any line styles that are within these file, as illustrated below, when viewing or exporting the files.

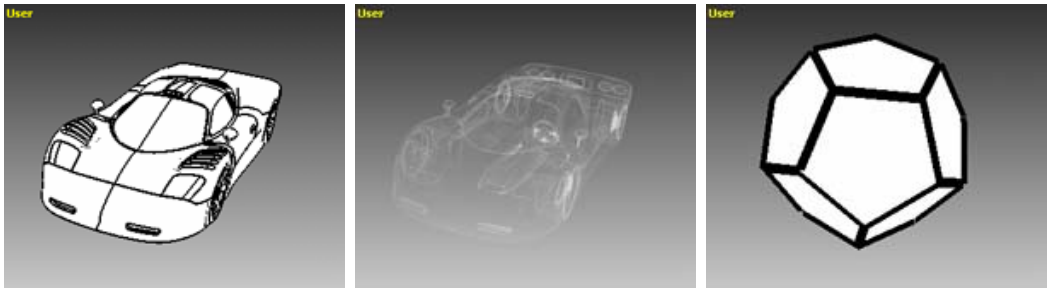

Illustration with high detail/Thin wireframe/Thick and thin lines

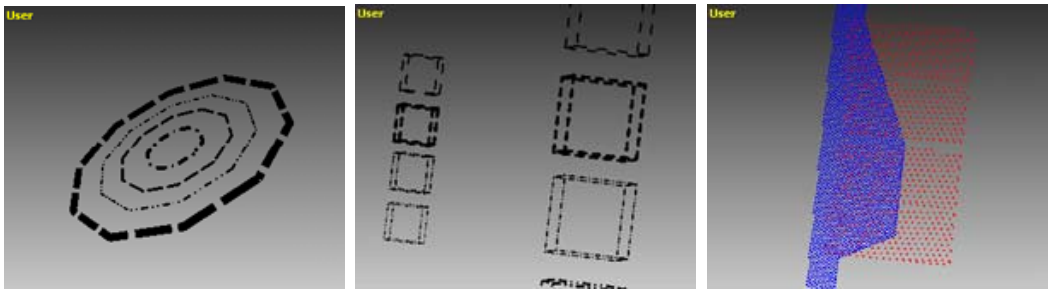

Various line thickness/Orthographic styles/Dots

Copyright © Right Hemisphere 2007. All Rights Reserved.

Note: DirectX 9.0 does not support Illustration or wireframe line thickness greater than 1px.

Procedure

To change the display renderer, do one of the following:

- Click **Display > Display Renderer** on the menu bar, and then click display renderer you require.
- Click the name of the current renderer in the status bar (on page 421), and then click the renderer you require.

Grid Menu

Menu bar > Display > Grid

Use the Grid menu to select the type and size of the viewport grid (on page 85) or 'floor' of the scene, and whether to display a scene 'shadow'. This enhances the placement of objects making them easier to distinguish.

Note: The time taken to refresh the scene may increase slightly if you display a grid.

See also Display Toolbar (on page 368).

Interface

Wire Grid—Displays a wireframe grid.

Solid Grid—Displays a solid grid.

Transparent Grid—Displays a transparent grid.

No Grid—Hides the grid. The grid size options become redundant when you select this command.

Shadow—Displays and hides the projection of shadows.

Grid sizes—The size of the grid to display in the scene. These options are only applied if you select to display a grid in the scene.

- **1x1**—Displays a 1 by 1 unit grid.
- **2x2**—Displays a 2 by 2 unit grid.
- **3x3**—Displays a 3 by 3 unit grid.
- **4x4**—Displays a 4 by 4 unit grid.
- **5x5**—Displays a 5 by 5 unit grid.
- **7x7**—Displays a 7 by 7 unit grid.
- **10x10**—Displays a 10 by 10 unit grid.
- **15x15**—Displays a 15 by 15 unit grid.

Copyright © Right Hemisphere 2007. All Rights Reserved.

Lights Menu

Menu bar > Display > Lights
Keyboard > ALT+0, ALT+1, ALT+2, ALT+3, ALT+5, ALT+6, ALT+7, ALT+8, ALT+9, ALT+S

The Lights menu contains commands for the display of the scene's lights, which imitate different kinds of real-world light sources such as the sun, office lamps, or stage and film lighting.

Note: The scene's lighting is also affected by the scene's ambient and illumination colors (on page 333).

Interface

Lights from File—Applies any lights that are visible in the Scene tree including any lights loaded from the file, as well as any lights that have since been added to the scene using the 'Create Editable Lights (on page 262)' function. If there are no lights in the Scene tree, the current preset lighting mode is used.

Note: Selecting a preset lighting mode clears this command. Therefore, you must select a preset lighting mode before selecting the Lights from File' command to ensure it functions correctly.

White Lights—Applies white lighting.

Day Light—Applies lighting to simulate daylight.

Hard Lights—Applies hard lighting.

Colored Lights Red/Green—Applies red, blue, and green lighting. The color from each light remains separate from the others.

Colored Lights Blur/Green—Applies blue and yellow lighting. The color from each light remains separate from the others.

Blue Lights—Applies blue lighting.

Marsiano Lights—Applies red lighting.

Cube Lights—Applies cube lighting.

CAD Optimized Lights—Applies lighting that is optimized for CAD files. This should be used in conjunction with CAD files.

Single Light from Eye—Applies a single light originating from the viewer's eye.

No Lights—Turns all lights off.

Increase Brightness—Applies more brightness.

Decrease Brightness—Applies less brightness.

Restore Brightness—Restores the original level of brightness.

Specular Lights—Adds a specular light component into the lighting calculation.

Copyright © Right Hemisphere 2007. All Rights Reserved.

Smoothing Menu

Menu bar > Display > Smoothing

The Smoothing menu is used to apply smoothing to selected objects in Solid or Transparent mode. This can be helpful in improving the 'look' of the objects.

These settings are global, that is, they change the smoothing for the entire scene. Individual objects can possess local smoothing settings (on page 335) that override these global settings.

Note: These commands may lessen the display performance. They also have no effect on wireframe views.

Interface

Use Existing Smoothing—Uses the smoothing normals from the current file.

0-180—Applies the selected smoothing angle degree.

Custom Angle—Opens the Custom Smooth Angle dialog and is used to apply a degree of smoothing angle.

No Smoothing—Disables all smoothing.

Materials Menu

Menu bar > Display > Materials
Keyboard > CTRL+M
Keyboard > CTRL+T

The Materials menu is used to apply settings to the scene's materials.

Interface

Use Default Material—Displays and hides the default material on all objects. This is helpful when reviewing files that have very light or dark materials.

Show Transparency—Displays and hides transparency in those materials that are transparent.

Show Textures—Displays and hides textures on objects in Solid render mode. The textures are displayed in the most realistic and detailed representation for the scene.

Copyright © Right Hemisphere 2007. All Rights Reserved.

Create Menu

Menu bar > Create

Using the Create menu, you can create camera views (on page 75), add light sources, zoom to a detailed area, add thrustlines and create primitives and modifiers.

Interface

 **Spot Light**—A spotlight casts a focused beam of light like a flashlight, or a spot light in a theater, or a like a car headlight. Unlike a targeted spotlight, a free spot light has no target object. You can move and rotate the free spot to aim it in any direction.

 **Target Spot Light**—A targeted spotlight casts a focused beam of light like a flashlight. A target spotlight uses a target object to aim the camera.

 **Point Light**—A point light casts rays in all directions from a single source. Point lights are useful for adding "fill lighting" to your scene, or simulating point source lights. Point lights can cast shadows and projections, a single shadow-casting point light is the equivalent of six shadow-casting spotlights, pointing outward from the center.

When you set a map projected by an point light to be projected using the Spherical, Cylindrical, or Shrink Wrap Environment coordinates, the map is projected in the same way as it would be mapped to the environment. When you use the Screen Environment coordinates or Explicit Map Channel Texture coordinates, six copies of the map are projected radially.

Tip: Point lights can generate up to six quadtrees, so they generate ray-traced shadows more slowly than spotlights. Avoid using ray-traced shadows with point lights unless your scene requires this.

Camera Views

Camera views are based on the current view of the camera. They are activated via the 3D Objects list or the Views menu (on page 393).

After creating a camera, either the camera object or the camera object and associated target node are displayed in the Scene Components panel depending on the type of camera created. You can modify these objects as you would modify other 3D objects. For example, selecting, hiding, and deleting, and attaching camera objects to groups.

Camera (on page 77)—Creates a camera object of the scene using the current view's camera position.

Target Camera (on page 77)—Creates a camera object and associated target node, using the current view's camera position.

 **Editable Lights** (on page 260)—Creates a light object in the Scene tree for each current scene light. To view the editable lights' effect on the scene, you must select the 'Lights From File' lighting mode; this uses the lights that are defined in the scene as the lighting source. This is helpful if you want to save the lights with the file, or if you want to perform various functions on the lights such as grouping and animating, etc. Note that light type that is created depends on the current lighting mode (on page 73).

Note: Infinite lights (on page 74) can be rotated but not moved. Point lights (on page 74) can be moved but not rotated.

Copyright © Right Hemisphere 2007. All Rights Reserved.

Primitives and Modifiers

The Primitives and Modifiers options are used to add primitives (preset 3D objects) to the scene. There are many types of primitives including lines, spheres, boxes, stairs, gears, and archways.

It is also used to apply modifiers to any 3D object that you select in the scene. Modifiers provide many different ways to modify existing objects, while keeping file size to a minimum. You can also adjust the properties of the modifiers (on page 337) at any time. For example, normally you want the center of the Inflate modifier to be a point somewhere in the midst of the object, and radius to be the distance of the furthest vertex from center. However, you can change the center anchor of the Inflate modifier object to achieve different effects.

 **Create Primitive** (on page 182)—Adds the selected primitive to the scene.

- **Arc**—Adds a arc to the scene; a curved bow-like segmented line in a 2D plane.
- **Arch**—Adds an archway to the scene; a rectangular object with or without rounded corners inside and out.
- **Box**—Adds a box to the scene; a square six-sided 3D object.
- **Capsule**—Adds a capsule to the scene; a long spherical type 3D object.
- **Circle**—Adds a circle to the scene; a curved closed segmented arc in a 2D plane.
- **Cone**—Adds a cone to the scene; a 3D object with a round base that extends to a point.
- **Cylinder**—Adds a cylinder to the scene; a 3D object with a round base that extends up or down, and may, or may not, be tapered.
- **Disk**—Adds a disk to the scene; a circular 2D plane object made up of faces.
- **Donut**—Adds a donut to the scene; a circular 2D plane object with a hole in its center made up of faces.
- **Frame**—Adds a frame to the scene; a rectangular object that is similar to a picture frame (without a back).
- **Gear**—Adds a gear to the scene; a cylinder type object with teeth or notches on the inside or outside.
- **Gengon**—Adds a gengon to the scene; a 3D, round cylinder type object.
- **Geosphere**—Adds a geosphere to the scene; a ball like 3D object made up of triangle faces.
- **Helix**—Adds a helix to the scene; a 3D spiral object, similar to a corkscrew.
- **Plane**—Adds a plane to the scene; a rectangular object divided up into length and width segments.
- **Polygon**—Adds a polygon to the scene; a closed series of line segments in a 2D plane.
- **Polyhedron**—Adds a polyhedron to the scene; a ball-like 3D object made up of triangle faces.
- **Prism**—Adds a prism to the scene; a 3-sided triangular object.
- **Pyramid**—Adds a pyramid to the scene; a 3D object with a square base that extends to a point.
- **Rectangle**—Adds a rectangle to the scene; a 4-sided box with or without rounded corners.
- **Rounded Box**—Adds a rounded box to the scene; a square six-sided 3D object with rounded edges.
- **Rounded Frame**—Adds a rounded frame to the scene; similar to a Frame, but it can have rounded inner and outer corners.
- **Sphere**—Adds a sphere to the scene; a 3D round ball-like object.
- **Spindle**—Adds a spindle to the scene; a 3D object with a round base that extends up or down and may or may not be tapered.

Copyright © Right Hemisphere 2007. All Rights Reserved.

- **Spiral Stairway**—Adds spiral stairs to the scene. A spiral stair is composed of the following elements: the steps themselves; handrails; posts, which extend from the undersides of the rail segments to the step tops; case, which extends the sides of the stairs to the ground; and the central pole.
- **Spring**—Adds a spring to the scene; a spiral-type 3D object.
- **Stairway**—Adds a stairway to the scene. A stairway is composed of the following elements: the steps themselves; the handrails; the posts, which extend from each step top to the rails; and the case, which extends the sides of the stairway to the ground.
- **Star**—Adds a start to the scene; a circular 2D object with pointed faces around its outside.
- **Stick**—Adds a stick to the scene; a line type object that will deviate in different directions for each segment.
- **Teapot**—Adds a teapot to the scene; the classic 3D model. It was one of the first 3D models created, and was typically used for testing the speed of older modeling systems.
- **3D Text**—Adds 3D text to the scene.
- **Torus**—Adds a torus to the scene; a spiral-type 3D object.
- **Tube**—Adds a tube to the scene; a 3D object with a round base that extends up or down, and may, or may not, be tapered.
- **Point**—Adds a single vertex to the scene. The point's style and color can be modified, and the size can be adjusted over a specified distance.
- **Axis**—Adds an XYZ axis to the scene. The axes length, arrow and character size, and individual axis colors can be modified.
- **Infinite Plane**—Adds an infinite plane to the scene. The plane size and X and Y line colors can be modified. You can also choose whether the X and Y lines are drawn.



Create Modifier (on page 182)—Applies the selected modifier to the selected object.

- **Swap Axis**—Swaps the selected 3D objects' axis. For example, if an object points X values can be swapped with the points Z values. This modifier is especially useful when loading meshes from other sources. For example, .x files.
- **Bend**—Bends the selected 3D objects by a specified amount. You should ensure that the object being bent has enough vertices to make a smooth bend.
- **Inflate**—Modifies the selected 3D objects' vertices using a given sphere to inflate or deflate the object's appearance.
- **Mirror**—Mirrors the selected 3D objects. Objects are mirrored at their base location.
- **Noise**—Randomly moves the vertices of the selected 3D objects.
- **Ripple**—Ripples the selected sub-objects.
- **Skew**—Pushes one end of the selected 3D objects' vertices in one direction while leaving the other end stationary.
- **Spline**—Converts the vertices of an object (in order) into a single spline wire. The Degree setting determines how close the spline follows the straight line between the vertices. A value of 3 is generally results in a soft curve.
- **Stretch**—Stretches or squashes the selected 3D objects. The modifier axis and direction define an axis line in space. The object is scaled along it (stretch) and transverse to it (squash).
- **Taper**—Tapers the selected 3D objects by making it smaller or larger on a specified axis.
- **Twist**—Twists the selected 3D objects a specified amount.
- **Wave**—Applies a wave to the selected 3D object' vertices.

Copyright © Right Hemisphere 2007. All Rights Reserved.

Render Menu

Menu bar > Render

The Render menu is used to perform a number of render functions including rendering the scene to a saved file, to the viewport or a separate window, as either a series of still images or video clip, and modifying the renderer properties.

Note that when rendering to the viewport with multiple viewports (on page 63) displayed, only the active viewport displays the rendered scene. You can choose to save the render at that point using the Save As (on page 250) command. However, if you resize the viewports, the render changes back to the 3D scene.

This functionality can also be accessed via the Raster Illustration tool (on page 162).

Interface

Render To File—Used to open the Save As dialog, render the current scene in a 2D format, and save the file to the location of your choice.

Auto Fly-Around—Saves animated files as either a series of still images or as a video clip. For example, as an AVI file or a number of JPG files.

Raytracer—Renders the scene using the Raytracer renderer (the best quality scene rendering), to the active viewport or a separate window depending on your selection in the Output tab (on page 268).

Software Z-Buffer—Renders the scene using the Software Z-buffer renderer (an average quality render), to the active viewport or a separate window depending on your selection in the Output tab (on page 268).

Renderer Properties (on page 268)—Opens the Properties dialog and is used to modify the currently selected renderer settings.

Render To Dialog

Menu bar > Render > Render to File

The Render to File command is used to access the Render To dialog, from where you can render and save the current 3D file (on page 189) to one of a number of 2D formats.

Interface

Save in—Used to select a destination into which to save the file.

File name—The name for the saved file.

Save as type—The format in which you want to save the file.

Save—Saves the file in the selected format with the current export settings.

Cancel—Closes the dialog. Any changes made to the settings are lost.

Help—Opens the relevant Help topic.

Settings (on page 55)—Used to establish export properties for the selected format. This option is only available if the selected format contains export properties.

Render (on page 268)—Displays the current renderer and settings, and is used to open the Properties dialog and modify the settings for the selected renderer.

- **Settings**—Used to establish render properties for the selected renderer.

Copyright © Right Hemisphere 2007. All Rights Reserved.

Time Output—Used to set the animation range if the current file is animated. These options are only available if the selected file contains animation.

- **Single image**—Generates a single image. That is, generates the current scene state as the saved file.
- **All animation sequence [current number of frames]—**Saves the total number of frames as individual image files. That is, as a sequence of images. The number of files that are created equals 'seconds duration*FPS'. For example, if the animation is five seconds long and the FPS=30, 150 files are created.
- **Range—**Used to specify the first and last frame numbers to save that number of image files.
- **Custom frames**—Used to specify a custom number of frames to save as individual image files. That is, as a sequence of images. For example, if the animation is five seconds long and the FPS=30, usually 150 files would be created. However, if you enter 50 in the Frames field, only 50 files are created.
  - **Frames**—Determines the number of frames to save as individual image files.
  - **FPS**—The frames per second, that is, the number of frames of an animation sequence that are displayed every second. This setting reflects on the playback system as various film, computer, and TV playback systems differ.

Render Auto Fly-Around Dialog

Menu bar > Render > Auto Fly-around

The Auto Fly-Around command is used to access the Render Auto Fly-Around dialog, from where you can save animated files as either a series of still images or as a video clip (on page 189) to a destination of your choice.

Interface

Save in—Used to select a destination into which to save the images or video.

File name—The name for the saved file.

Save as type—The format in which you want to save the file.

Save—Saves the file in the selected format with the current export settings.

Cancel—Closes the dialog. Any changes made to the settings are lost.

Help—Opens the relevant Help topic.

Round Trip—Used to select the number of frames and the vertical deviation, and you can preview the file.

- **Number of frames—**Determines the number of image files that are created, or the number of frames created in the video output.
- **Vertical deviation—**Determines the deviation of the camera on the vertical axis as it moves around the scene.
- **Preview—**Previews the file as it would be viewed once it is saved in video format.

Render (on page 268)—Displays the current renderer and settings, and is used to open the Properties dialog and modify the settings for the selected renderer.

- **Settings**—Used to establish render properties for the selected renderer.

Copyright © Right Hemisphere 2007. All Rights Reserved.

Renderer Properties

Menu bar > Render > Renderer Properties
Menu bar > Rendering toolbar > Renderer Properties
Menu bar > Illustration toolbar > Raster Illustration

Render settings can be modified and applied to the current file using the Properties dialog for the selected renderer. It includes tabs that are specific to the selected display renderer, and is opened via the Render menu (on page 265), Rendering Toolbar (on page 378), or the Raster Illustration tool (on page 162).

You can choose to render scenes directly to the active viewport or save it to file. You can also choose to display the rendered scene and the render statistics in separate windows.

Note: Properties for the display renderer (on page 259) graphics cards installed on your computer properties for the can be set using the Render tab (on page 292) on the Options dialog.

Output Tab

The Output tab is common to all renderer types and is used to establish the renderer output settings.

Interface

Resolution—Used to select the resolution to use when rendering the scene.

- **Window [width x height]—**Renders the scene to the default window resolution.
- **[width x height] resolution**—Used to select and apply a preset resolution setting.
- **Custom**—Used to select and apply the resolution settings you want.
  - **Width—**Determines the width of the rendered scene.
  - **Height—**Determines the height of the rendered scene.

Image format—Used to select the pixel format (color depth) to use when rendering the scene. That is, the number of colors used to draw the scene. The format is in bits.

Note: This command only relates to the Raytracer renderer type as the Software Z-buffer renderer only supports 24bit RGB.

Close statistics after rendering (on page 270)—Closes the Render Statistics dialog after the render is complete.

Render in new window (on page 268)—Displays the rendered scene in a separate window.

Render—Renders all selected files to the selected format.

OK—Saves the settings and closes the dialog without rendering the scene.

Cancel—Closes the dialog. Any changes made to the settings are lost.

Help—Opens the relevant Help topic.

Copyright © Right Hemisphere 2007. All Rights Reserved.

Render Window

When you render a scene, it is rendered either directly to the active viewport or saved to file depending on your settings in the Renderer properties dialog. You can also display the rendered scene in a separate window from the application, at the same time as rendering to viewport or to file.

The render window includes a number of tools that can be used to save and copy the image, display information about the image, and modify the display within the window.

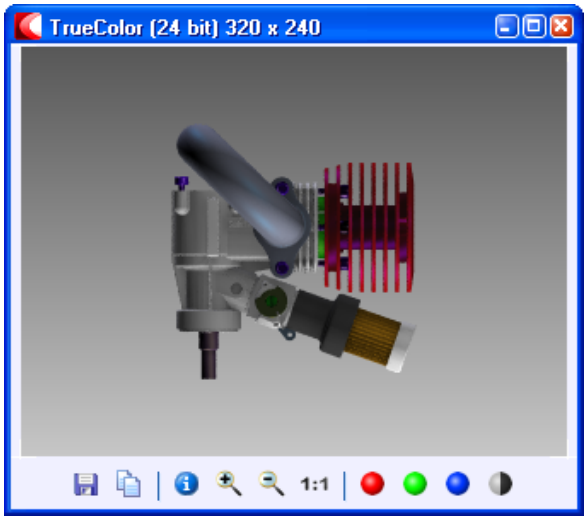

Example: Render to new window

Interface


Save As—Opens the Saves As dialog and is used to save the image to the location, with the name, and in the format of your choice.


Copy Image—Copies the image to the clipboard.


Information—Displays information relating to the image.


Zoom In (on page 67)—Magnifies the image.


Zoom Out (on page 67)—Reduces the magnification of the image.



Standard View (on page 67)—Displays the image at its actual size in the dialog.


Red Channel (on page 364)—Displays and hides the red color channel.


Green Channel (on page 364)—Displays and hides the green color channel.


Blue Channel (on page 364)—Displays and hides the blue color channel.


Alpha Channel (on page 364)—Displays and hides the alpha color channel.

Copyright © Right Hemisphere 2007. All Rights Reserved.

Render Statistics Window

When you render a scene (on page 188), you can choose to display the render statistics. For example, the number of objects and triangles that are rendered.

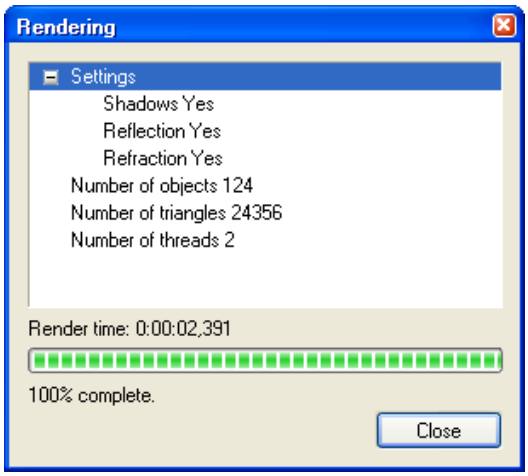

Example: Render statistics window

Interface

Close—Displays information relating to the image.

Raytracer Tab

The Raytracer tab becomes active when the Raytracer renderer is selected from the Render menu (on page 265). It is used to control a number of raytrace render options including antialiasing and shadows.

Interface

Antialiasing—Used to select the amount of antialiasing to apply. Antialiasing is the smoothing of the staircase effect that occurs when diagonal or curved lines, or borders are drawn on raster illustrations consisting of square or rectangular pixels. The higher the value, the smoother the rendered output.

Note: Higher values slow down the processing speed.

- **None**—Renders pixels without antialiasing.
- **Adaptive**—Uses adaptive antialiasing; antialiasing pixels that are different to any of the adjacent pixels. Edges are detected and smoothed by comparing edges of subdivided pixels. If the color difference is more than a set tolerance,the sub-pixels are again divided and so on, until no edge is detected.
- **2x2**—2x2 sub-pixels are calculated within each pixel, and then averaged.
- **3x3**—3x3 sub-pixels are calculated within each pixel, and then averaged.
- **4x4**—4x4 sub-pixels are calculated within each pixel, and then averaged.
- **5x5**—5x5 sub-pixels are calculated within each pixel, and then averaged.
- **6x6**—6x6 sub-pixels are calculated within each pixel, and then averaged.
- **7x7**—7x7 sub-pixels are calculated within each pixel, and then averaged.
- **8x8**—8x8 sub-pixels are calculated within each pixel, and then averaged.

Copyright © Right Hemisphere 2007. All Rights Reserved.

Double-sided polygons—Renders both sides of all faces, that is, if you need to render the inside and the outside of objects, or if you've imported complex geometry in which the face normals are not properly unified. Selecting this option increases the rendering time.

Filter texture maps—Filters the texture mapping. The texture value for each pixel is calculated using the average of the nearest texture elements to produce smoother results and works with both ray tracing and outline render.

Raytrace reflections—Applies true reflections using ray tracing from the camera view back to the light source. Models mapped with raytrace reflections act as mirrors.

Refraction—Applies refraction to the rendered scene.

Shadows—Applies hard shadows to the rendered scene.

Soft shadows—Applies soft shadows to the rendered scene.

Use multi-thread rendering—Uses all available processors to render the scene and increase the speed of rendering. This option is dependent on the number and power of your processors.

Render—Renders all selected files to the selected format.

OK—Saves the settings and closes the dialog without rendering the scene.

Cancel—Closes the dialog. Any changes made to the settings are lost.

Help—Opens the relevant Help topic.

Software Z-Buffer Tab

The Software Z-buffer tab becomes active when the Software Z-buffer renderer is selected from the Render menu (on page 265). It is used to control antialiasing and rendering of additional items.

Interface

Antialiasing—Used to select the amount of antialiasing to apply. Antialiasing is the smoothing of the staircase effect that occurs when diagonal or curved lines, or borders are drawn on raster illustrations consisting of square or rectangular pixels. The higher the value, the smoother the rendered output.

Note: Higher values slow down the processing speed.

- **None**—Applies no antialiasing to the pixels.
- **2x2**—2x2 sub-pixels are calculated within each pixel, and then averaged.
- **3x3**—3x3 sub-pixels are calculated within each pixel, and then averaged.
- **4x4**—4x4 sub-pixels are calculated within each pixel, and then averaged.

Render additional items—Renders all additional items such as the grid, axis etc.

Render—Renders all selected files to the selected format.

OK—Saves the settings and closes the dialog without rendering the scene.

Cancel—Closes the dialog. Any changes made to the settings are lost.

Help—Opens the relevant Help topic.

Copyright © Right Hemisphere 2007. All Rights Reserved.

Favorites Menu

Menu bar > Favorites

The Favorites menu enables you to add frequently opened files to your favorites list for easy access. Files are added either to the default application folder or to folders that you create yourself. You can then rename them and open your favorite files quickly.

Favorites folders and files are deleted manually as described below. The method depends on version of Deep Exploration you are using. You can also create, rename, and move folders, and rename and move favorites files using the Favorites list (on page 302).

Procedures

To add a file to your favorites:

1. Click **Favorites > Add to Favorites** on the menu bar. The Add Favorite dialog is displayed.
2. Enter a name for the file and file path if you require in the Name field.
3. Do one of the following:
   - Select the folder to which you want to add the file.
   - If you want to add the file to a new folder, click **New Folder**, enter the name you require and then select it.
4. Click **OK**. The current file and file path are added to the folder.

To open a favorites file:

Click the file that you want to open in the Favorites menu.

To delete your favorites files:

1. Navigate to C:\Documents and Settings\[user name]\Application Data\Right Hemisphere\Deep Exploration.
2. Delete the favorites.dat file.

Interface

Add to Favorites—Adds the current file to your favorites list.

Examples—Displays your current favorites and is used to open the favorites folders and files.

Note: The Examples folder is the default favorites folder and can be renamed as you require.

Copyright © Right Hemisphere 2007. All Rights Reserved.

Tools Menu

Menu bar > Tools

The Tools menu can be used in many ways including clearing the history list, updating thumbnail images and configuring certain graphics files settings.

Interface

Clear History (on page 304)—Deletes your history list of most recently browsed files.

Generate Thumbnails (on page 273)—Opens the Generate Thumbnails dialog and is used to create or update thumbnails in the thumbnails cache, for all files in the current folder.

Update Thumbnail (on page 273)— the thumbnail for the current model with any new settings you have applied. For example, render and viewport settings.

2D Tools (on page 274)— to control a number of image settings including modifying the image size and rotating the image.

3D Tools (on page 278)—Used to control a number of scene elements including removing duplicate materials and meshes.

Plugin Manager (on page 180)—Displays plugins, file formats and related information, and to resolve any file format conflicts.

Customize Layout (on page 256)—Opens the Customize Layout dialog and is used to control the display of the various user interface components.

Options (on page 280)—Opens the Options dialog and is used to establish various settings including color, 3D and 2D view, file, texture, slide show, and NURBS settings.

3Dx Input Device Settings (on page 297)—Allows you to control the camera using the 6DOF controller, only if you have the 3dConnexion spacemouse.

Generate Thumbnails Dialog

Menu bar > File > Generate Thumbnails
File list > Generate Thumbnails

Thumbnails are helpful for viewing and selecting files. When a thumbnail image is generated (created or updated) for a file, it is saved in the thumbnail cache. The next time the thumbnail is required, it is retrieved from the cache. You can choose from three thumbnail generation methods via the Options dialog: manual generation, whenever you open a file, or automatic generation (whenever a file is modified).

If you choose the manual generation method, the Generate Thumbnails command can be used to update the images for all files that are displayed in the File list when, and as you require.

After choosing the manual generation method and displaying the File list in Thumbnail view, a clock icon is displayed on the thumbnail images whenever you modify the files. Once you generate the thumbnails manually, this icon disappears and the updated image is displayed. Various thumbnail properties can be modified including the size, the cache memory size, and the generation method.

Here, we describe generating thumbnails manually, establishing generation settings, and deleting thumbnails.

Tip: You can update individual thumbnails by selecting the file you want to update, and then choosing Tools > Update Thumbnail from the menu bar or pressing CTRL+U.

Copyright © Right Hemisphere 2007. All Rights Reserved.

Procedures

To generate thumbnails manually:

1. Navigate to the folder containing the files for which you want to generate thumbnails.
2. Do one of the following:
   - Choose **File > Generate Thumbnails** from the menu bar.
   - Click **Generate Thumbnails**  in the File list toolbar.
3. Select the camera from which to view each file's scene.
4. Select the 'Available scene camera' check box if you want to use the scene camera.
5. Select the 'Update existing' check box if you want to overwrite any existing thumbnails.
6. Click **OK**.

To delete thumbnails:

1. Navigate to C:\Documents and Settings\All Users\Application Data\Right Hemisphere\Deep Exploration.
2. Delete the pictures.dat file.

Interface

Camera View—Used to establish the settings with which thumbnail images are generated.

- **Camera—**Used to select a camera from which to view the scenes.
  - **Default view—**Sets the default camera position. That is, it uses the camera view from the original file.
  - **Active camera in current scene—**Sets the active camera position in the current scene.
- **Folder**—Displays the folder from which you selected to generate the thumbnails.
  - **Available scene camera—**Uses the camera properties from the current scene.

Process—Used to select whether to overwrite existing thumbnails and to view the point at which the process is currently running.

- **Update existing—**Overwrites any existing thumbnails.

OK—Creates new, or updates any existing thumbnail files.

Cancel—Cancels the process and closes the dialog. Any changes made to the settings are lost.

Help—Opens the relevant Help topic.

Copyright © Right Hemisphere 2007. All Rights Reserved.

2D Tools Menu

Menu bar > Tools > 2D Tools

The 2D Tools menu is used to control a number of image settings including modifying the image size and rotating the image.

Procedures

To apply a normal map:

1. Open a 2D image (on page 39).
2. Choose **Tools > 2D Tools > Normal Map** from the menu bar.
3. Enter a bump scale number for the map and click **OK**.

The bump map is created from the image.

To modify the image size:

1. Open a 2D image.
2. Choose **Tools > 2D Tools > Image Size** from the menu bar.
3. Enter the width and height of the image in pixels or percent.
4. Select the 'Preserve aspect ratio' field if you want to preserve the aspect ratio.
5. Click **OK**.

The image is displayed with the size settings.

Interface

Alpha Channel (on page 276)—Opens the Alpha Channel dialog and is used to manipulate the alpha and RGB channels.

Flip Horizontal—Flips the image horizontally.

Flip Vertical—Flips the image vertically.

Grayscale—Applies grayscale the image.

Image Size—Opens the Image Size dialog and is used to modify the size of the image.

- **Width—**Determines the width of the image.
- **Height—**Determines the height of the image.
- **Preserve aspect ratio**—Preserves the image's width-to-height ratio. An image with an aspect ratio greater than 1, is called a 'landscape' image. An image with an aspect ratio less than 1, is called a 'portrait' image. When the aspect ratio is exactly 1, the image is square.

Invert Image—Converts the color values to grayscale.

Normal Map—Opens the Normal Map dialog and is used to apply a new surface vector (normal) to each pixel of the surface (polygon). This can be used to create a 'geometrically non-existent' but 'real looking' bumpy surface on a smooth polygon.

- **Bump scale**—The level of 'bump' to apply to the normal map.

Rotate 180—Rotates the image 180 degrees.

Rotate 270—Rotates the image 270 degrees.
Rotate 90—Rotates the image 90 degrees.

Copyright © Right Hemisphere 2007. All Rights Reserved.

Alpha Channel Dialog

Menu bar > Tools > 2D Tools > Alpha Channel
Right-click 2D viewport > Tools > 2D Tools > Alpha Channel

The Alpha Channel dialog is used to manipulate the alpha and RBG channels of the current 2D image. For example, you can remove the alpha or RBG channels from the images.

Deep Exploration uses the alpha channel of images as an opacity map by default. However, in some cases you may not want this to happen. For example, some model formats use the alpha channel of textures for things like shininess, yet Deep Exploration will try to use it for opacity. In these cases, you can remove the alpha channel completely, or extract it so that it may be saved as a separate image. Also, some images may use alpha channel for transparency rather than opacity, so those images may be opaque in places where they should be transparent and vice versa. The Alpha Channel dialog can be used to correct these images for use in Deep Exploration.

Procedure

To open the Alpha Channel dialog:

1. Open a 2D image.
2. Do one of the following:
   - Choose **Tools > 2D Tools > Alpha Channel** from the menu bar.
   - Right-click the image and then choose **2D Tools > Alpha Channel**.

To remove the alpha channel from an image:

1. Open the 2D image from which you want to remove the alpha channel.
2. Open the Alpha Channel dialog.
3. Click **Remove** and then click **OK**.

To extract the alpha channel from an image:

1. Open the 2D image from which you want to extract the alpha channel.
2. Open the Alpha Channel dialog.
3. Click **Extract** then do one of the following:
   - Click **Clear color channels** to fills the color channels with solid white.
   - Click **Remove color channels** to remove the color channels entirely.
4. Click **OK**.

To replace or add an alpha channel in an image:

1. Open the 2D image in which you want to replace or add an alpha channel.
2. Open the Alpha Channel dialog.
3. Do one of the following:
   - Click **Replace** if the image has an alpha channel.
   - Click **Add** if the image does not have an alpha channel.
4. Select the source to use as the channel's base value.
5. Select the value with which to multiply the source value.
6. Do one of the following:

Copyright © Right Hemisphere 2007. All Rights Reserved.

- Click **Whole image** to apply the source value evenly over the entire image.
- Click **By key color** to apply the source value over the parts of the image where the RGB color matches the key color.

7. If you selected 'By key color', select a key color and a color tolerance level, and then select the 'Soft edges' check box if you want to consider pixels of any color except the key color as a match.
8. Click **OK**.

Interface

Remove—Removes the alpha channel leaving only the RGB channels. This option is only available if there is an alpha channel present.

Extract—Removes the RGB channels leaving only the alpha channel using one of two methods. This option is only available if there is an alpha channel present.

- **Clear color channels**—Fills the color channels with solid white.
- **Remove color channels**—Removes the color channels entirely. This leaves an 8-bit grayscale image.

Replace / Add—Replaces the existing contents of the channel if one is present, or adds a new alpha channel to the image if one is not present.

- **Source**—Used to select the base value for the alpha channel. For example, if the red channel is selected as the source, the resulting alpha channel has a high value in areas where the red value is high, and low values where the red value is low.
  - **Constant value**—Applies a value of 1.0 to all pixels.
  - **Existing alpha**—Uses the existing alpha values for the alpha channel. In combination with the Multiplier option, this allows you to tone down or invert an existing alpha channel. Note that is you are adding a new alpha channel, this option functions in the same manner as the 'Constant value' option.
  - **Luminance**—Bases the alpha channel on the luminance (the perceived brightness) of the RGB channels.
  - **Red channel**—Applies a red alpha value to each pixel.
  - **Green channel**—Applies a green alpha value to each pixel.
  - **Blue channel**—Applies a blue alpha value to each pixel.
  - **Red and green**—Applies an alpha value from the average of the red and green channels to each pixel.
  - **Red and blue**—Applies an alpha value from the average of the red and blue channels to each pixel.
  - **Green and blue**—Applies an alpha value from the average of the green and blue channels to each pixel.
  - **Red, Green, Blue—**Applies an alpha value from the average of the red, green, and blue channels to each pixel.
- **Multiplier**—Multiplies the source value by this value, allowing you to tone down the final values. This value can be negative, in which case the final alpha channel is inverted. That is, high source values become low values and vice versa.
- **Whole image**—Applies the source value evenly over the entire image.
- **By key color**—Applies the source value over the parts of the image where the RGB color matches the key color. Unmatched parts of the image have an alpha value of 0 (or 1 if the multiplier is negative) applied.
  - **Key color**—Opens the color selector and is used to select the key color.

Copyright © Right Hemisphere 2007. All Rights Reserved.

- **Tolerance**—Determines how similar the current color must be to the key color, to be considered a match.
- **Soft edges**—Considers pixels of any color, except the key color, as a match. Any pixel in which the color is considered a match, but is not the exact same color as the key color, has an alpha value somewhere between the source value and 0 (or 1 if the multiplier is negative) applied. The exact value is determined by how close the match is. That is, a color that closely matches the key color has an alpha value very close to the source value applied, and a color that only barely matches has a value very close to 0 applied. This option is only available if the 'Tolerance' value is greater than 0.

3D Tools Menu

Menu bar > Tools > 3D Tools

The 3D Tools menu can be used to perform a number of functions including flying the camera to the selected objects and unifying normals.

Note: Certain commands are only available if you are licensed for the CAD Edition.

Interface

Bake Transformation (on page 87)—This tool fixes vertices in place by removing any transformations that may be on an object and fixing the vertices into that transformed position, it works both on the whole scene and on a selection.

Benchmark (on page 115)—Measures the speed of your computer and graphics card and sends the information to a text file.

Convert to Double-Sided (on page 130)—Duplicates object polygons to display the same surface on the front and back faces of the objects.

Note: This function doubles the number of polygons. It may be more efficient to apply the double-sided attribute to an object (on page 335) or material (on page 351), or use CTRL+H to show the back-facing geometry.

Fly Camera to Selection—Zooms into the viewport to focus on the selected objects.

Invert Faces and Normals—Inverts all faces and normals.

Join Equal Points—Joins all the points that have equal (coincident) x,y,z coordinates.

Mirror (on page 280)—Mirrors objects in the scene.

Remove Degenerate Triangles—Removes all degenerate triangles from the scene or from the selected objects depending on your selection. A degenerate triangle is a polygon with three vertices that don't form a triangle. This happens when the three vertices are all on the same line (assuming euclidean geometry). In the extreme case all vertices share the same location and the triangle degenerates to a singular point.

Remove Duplicate Faces—Removes all duplicate faces from the scene or from the selected objects depending on your selection. This is helpful if you want to optimize the model size and render speed.

Remove Duplicate Materials—Removes all duplicate materials from the scene or from the selected objects depending on your selection. This is helpful if you want to optimize the model size and render speed.

Remove Duplicate Meshes—Removes all duplicate meshes from the scene or from the selected objects depending on your selection. This is helpful if you want to optimize the model size and render speed.

Copyright © Right Hemisphere 2007. All Rights Reserved.

Remove Internal Parts—Opens the Remove Internal Parts Wizard and is used to hide or delete internal objects from the model. This function cannot be reversed.

Unify Normals (on page 117)—Opens the Unify Normals dialog and is used to align all surface normals in the same direction.

Benchmark Settings Dialog

Menu bar > Tools > 3D Tools > Benchmark
Right-click 3D viewport > Tools > Benchmark

Using the Benchmark Settings dialog, you can modify various settings including the number of seconds in which to test the file and the resolution with which to display the file as it is being benchmarked (on page 115).

Interface

Benchmark—Used to select a benchmark configuration file.

Duration—The number of seconds in which to test the file.

X-rotation—The angle of rotation about the X-axis.

Y-rotation—The angle of rotation about the Y-axis.

Start after—Determines the number of scene renders to ignore before the benchmark process begins. Benchmarking modifies the screen resolution and the size of the windows when the process first begins. These modifications are not immediate, therefore it takes time for the 3D scene measurements to be resolved. The duration of this 'settling down' period varies depending on a number of factors including the current Windows activities and the amount of available memory. As the duration is uncertain, this field can be used to ‘count’ the first few scene renders to ensure the correct information is gathered.

Samples—Determines the number of scene render samples that are used to calculate the rendering speed. The benchmark process runs for this number of frames and then, from the array of times that are collected, the minimum, maximum, and average frame rendering are calculated for every frame measurement. This is helpful if the frame rendering is very fast.

Full-screen—Used to display the file in Full-screen display mode when the information is compiled.

Window—Used to select the window resolution with which the file is displayed when the information is compiled.

Transparent background—Displays a transparent background during the benchmark process. Otherwise, an opaque background is displayed.

View (on page 76)—Used to select a preset camera view in which to display the scene.

Render method—Used to select the method used to render the scene.

Renderer (on page 259)—Used to select the renderer used to display the scene.

Default material—Applies the default material to the model. This is useful when reviewing files that have very light or dark materials.

Show textures—Displays and hides textures on objects in Solid render mode. The textures are displayed in the most realistic and detailed representation of scenes.

Show transparency—Displays and hides transparency in those materials that are transparent.

Start—Runs the benchmarking process.

Cancel—Cancels the process and closes the dialog. Any changes made to the settings are lost.

Copyright © Right Hemisphere 2007. All Rights Reserved.

Help—Opens the relevant Help topic.

Mirror Dialog

Menu bar > Tools > 3D Tools > Mirror
Right-click 3D viewport > Tools > Mirror

Using the Mirror dialog, you can mirror selected 3D objects in the scene. Objects are mirrored at their base location, and mirroring is performed using the mirror modifier.

Interface

Axes—Used to select an axis to act as a mirror axis. For example, you could mirror the objects along the X, XY, or XZ axes.

- **X**—The X-axis acts as a mirror axis and center.
- **Y**—The Y-axis acts as a mirror axis and center.
- **Z**—The Z-axis acts as a mirror axis and center.

Suffix—The name of the mirrored object. The mirrored object displays in the scene tree with a suffix added to the object name. The default for the suffix is -mirrored, although this can be changed.

Hide mirror on exit—Hides the mirror when you exit the dialog.

Convert to mesh—Converts the object to a mesh in its own right. That is, the object is no longer an instance of the original.

Mirror Size—Controls the size of the mirror to use.

OK—Closes the dialog. Any changes made are saved.

Cancel—Cancels the process and closes the dialog. Any changes made to the settings are lost.

Help—Opens the relevant Help topic.

Options Dialog

Menu bar > Tools > Options

Using the Options dialog, you can modify various settings including:

- Scene element colors.
- The 3D object drawing method.
- File associations.
- Texture search paths.
- Renderer properties.
- Default thumbnail size and cache settings.
- Slide show display time.
- The 2D image background color.
- CAD module search paths.
- NURBS processor and quality settings.

Procedure

To open the Options dialog:

Copyright © Right Hemisphere 2007. All Rights Reserved.

Choose **Tools > Options** on the menu bar.

2D View Tab

Menu bar > Tools > Options > 2D View tab

The 2D View tab is used to determine how 2D images are displayed when you open a 2D graphics file. For example, you can select to display the background color of an image in green and the markers in red.

You can also select the size and color of the viewport grid (on page 85) that can be displayed in transparent images. This enhances the image placement making it easier to distinguish.

Procedure

To change the color of the image background or markers:

1. Click the relevant color rectangle.
2. Select the color you require.
3. Click **OK** twice.

Interface

Background color—Used to open the color selector and select a color for image backgrounds.

Crop mark color—Used to open the color selector and select a color for the image crop marks.

Image Size—Used to determine the display size of 2D images.

- **Standard Mode**—Used to determine the size of 2D images while in Standard display mode.
  - **Minimize to fit window**—Fits oversized images into the window.
  - **Maximize to fit window**—Fits undersized images into the window.
- **Full-Screen Mode**—Used to determine the size of 2D images while in Full-screen display mode.
  - **Minimize to fit window**—Fits oversized images into the window.
  - **Maximize to fit window**—Fits undersized images into the window.

Transparency Settings—Used to set the size and colors of the grid in images with a transparent background.

- **Grid size**—Used to set the size of the grid.
  - **None**—Displays the background with no grid.
  - **Small**—Displays the background with small grid.
  - **Medium**—Displays the background with medium grid.
  - **Large**—Displays the background with large grid.
- **Grid color**—Used to select the colors for the alternating grid squares.
  - **Light**—Colors the grid squares alternately white and light gray.
  - **Medium**—Colors the grid squares alternately medium and dark gray.
  - **Dark**—Colors the grid squares alternately medium and dark gray.
  - **Red**—Colors the grid squares alternately black and dark gray.
  - **Orange**—Colors the grid squares alternately white and light orange.
  - **Green**—Colors the grid squares alternately white and light green.

Copyright © Right Hemisphere 2007. All Rights Reserved.

  - **Blue**—Colors the grid squares alternately white and light blue.
  - **Purple**—Colors the grid squares alternately white and light purple.
- **Color selectors**—Used to select custom colors for the alternating grid squares.

OK—Applies the settings and closes the dialog. Any changes made to the settings are saved.

Cancel—Closes the dialog. Any changes made to the settings are lost.

Help—Opens the relevant Help topic.

3D View Tab

Menu bar > Tools > Options > 3D View tab

The 3D View tab enables you to determine the drawing method of selected objects. You can also modify the auto-degradation settings and display ToolTips.

Note that objects that are not selected are rendered with the default settings.

Note: To apply any changes that you may have made on the Colors tab for the bounding box, vertices, wire frame, object axes, and surface normals, you must select the related check boxes on the 3D View tab.

Procedure

To modify the 3D view settings:

1. Make the selections you require.
2. Click **OK** and restart Deep Exploration.

Interface

Selected Object Draw Method—Used to determine the drawing method of selected objects.

- **Bounding box**—Renders selected objects with a bounding box.
- **Vertices**—Renders selected objects with vertices.
- **Wireframe**—Renders selected objects with a wire frame.
- **Current render method**—Renders selected objects with the current render method.
- **Show object axes**—Renders selected objects with object axes.
- **Surface normals**—Renders selected objects with surface normals.
- **Show tangents**—Renders selected objects with tangents.
- **Show skin weight**—Renders selected objects with skin weight.
- **Show motion paths** (on page 283)—Renders selected objects and displays a motion path if one has been created.
- **Show SubD control mesh**—Renders selected objects with a subdivision control mesh.
- **Highlight**—Renders the selected objects with a colored highlight (on page 286).

X-ray—Used to apply transparency to selected or unselected the objects.

- **None**—Displays all objects as opaque.
- **Selected objects**—Applies transparency to all selected objects. Objects that are not selected are displayed as opaque.
- **Unselected objects**—Applies transparency to all objects that are not selected. Selected objects are displayed as opaque.

Copyright © Right Hemisphere 2007. All Rights Reserved.

Opacity—Determines the level of opacity used when the X-ray effect is applied. That is, how transparent the objects are in the scene.

Viewport Degradation—Used to simplify the viewport display when panning or rotating models. This ensures the display frame rate does not drop causing an irregular display.

- **Auto-degrade if frame takes more than [number] ms**—Switches to a less intensive rendering method for all the objects that have not yet been processed for a single frame if that frame takes more than the specified number of milliseconds to draw.
- **No geometry drawn if frame takes more than [number] sec**—Determines the maximum number of seconds to spend drawing a single frame. If a single frame takes more than this number of seconds to draw, nothing is drawn.
- **Selected objects**—Used to select the method for rendering selected objects if a single frame takes more than the specified number of milliseconds to draw.
  - **Default**—Renders selected objects in the 'Selected Object Drawing Method' as established above.
  - **Bounding box**—Renders selected objects as bounding boxes.
  - **Transparent bounding box**—Renders selected objects as transparent bounding boxes.
  - **Vertices**—Renders selected objects as vertices.
  - **Wireframe**—Renders selected objects as wireframes.
- **Unselected objects**—Used to select the method for rendering unselected objects if a single frame takes more than the specified number of milliseconds to draw.
  - **Bounding box**—Renders unselected objects as bounding boxes.
  - **Transparent bounding box**—Renders unselected objects as transparent bounding boxes.
  - **Vertices**—Renders unselected objects as vertices.
  - **Wireframe**—Renders unselected objects as wireframes.

Do not draw on extra group items—Prevents rendering of additional items for the selected objects if the render is too time-consuming. For example, motion path, and surface normals etc.

Display ToolTips—Renders selected objects with ToolTips.

OK—Applies the settings and closes the dialog. Any changes made to the settings are saved.

Cancel—Closes the dialog. Any changes made to the settings are lost.

Help—Opens the relevant Help topic.

Copyright © Right Hemisphere 2007. All Rights Reserved.

Motion Path Edit

If the **Show motion path** option is checked, it is possible to edit the motion path dynamically by moving the set points situated along its path. These points are highlighted by a small orange sphere, click on any of these spheres and move its position.

Procedure

1. Select the object in the Scene Tree:

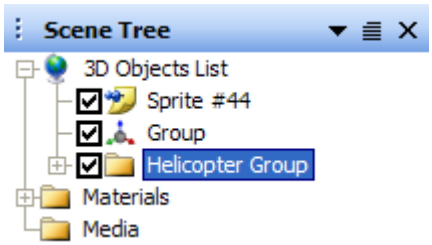

2. The motion path will be displayed.

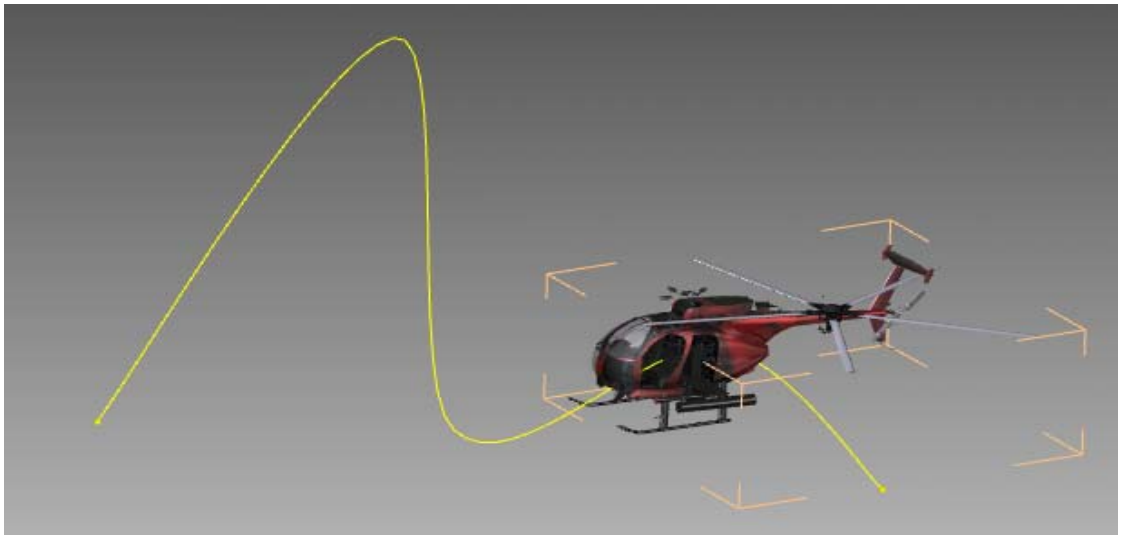

3. Click on the **Move** button, .
4. Use the **Move** option to reposition the set points (highlighted in orange, see image below).

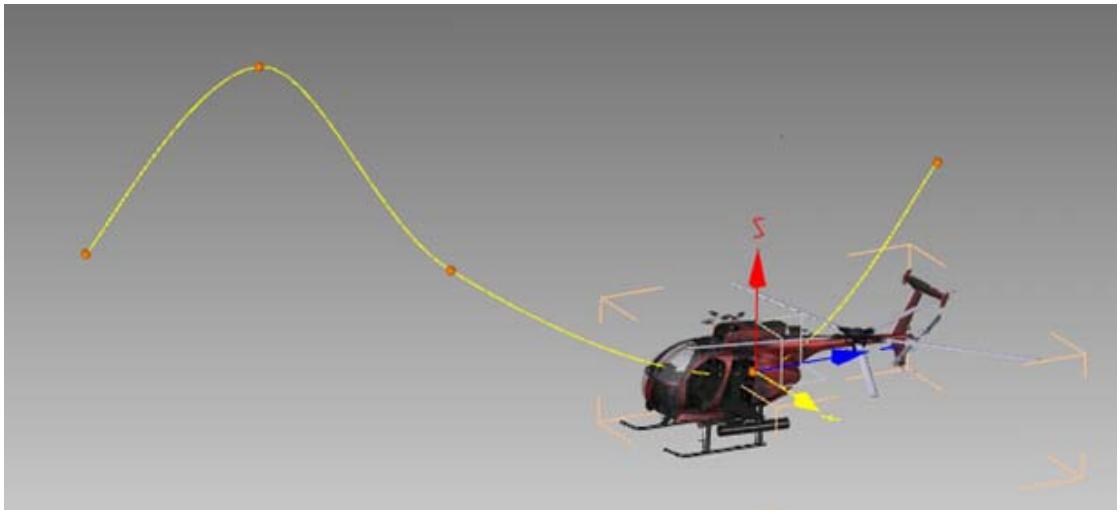

5. Click the **Play** button, , the animation will now follow the new path.

Copyright © Right Hemisphere 2007. All Rights Reserved.

CAD Modules Tab

Menu bar > Tools > Options > CAD Modules tab

The CAD Modules tab is used to define, and select the folders through which the application searches for associated CAD files when opening CAD files. For example, if a file has an related sub-assembly or parts file, the application searches through the user-defined paths to find those files.

Deep Exploration searches for these file through the directories in the following order:

1. The current directory of the file.
2. All folders relative to the current directory if a file has a relative path in the 3D file.
3. If an absolute path is contained within a file, the folder is defined within the absolute path.
4. Any user-defined folder paths and sub-folders listed in the CAD Modules tab.

Search paths are selected by default when added to the search paths list. You can clear the search path check boxes to prevent searching through the related paths.

You can also define search paths as recursive. This prompts the application to search through all sub-folders of the related search path when searching for texture maps.

Any changes you make using are applied the next time your computer is started.

Procedures

To add a user-defined search path:

1. Click **Add**.
2. Browse for the folder you require.
3. Click **OK** and restart the application.

The folder path and name is displayed in the search paths list.

To enable and disable searching through paths, do one of the following:

1. Do one of the following:
   - Select a search path check box to enable searching.
   - Clear a search path check box to disable searching.
2. Restart Deep Exploration.

To enable and disable searching through path sub-folders, do one of the following:

- Double-click a Sub-folders column cell to enable searching. The path is defined as as 'Recursive'.
- Double-click in a Sub-folders column cell that is defined as 'Recursive' to disable searching.

To edit a user-defined search path:

1. Click the search path you want to edit in the search paths list.
2. Click **Edit** and browse for the required new folder.
3. Click **OK** and restart Deep Exploration.

To change the order of user-defined search paths:

1. Click the search path you want to move.

Copyright © Right Hemisphere 2007. All Rights Reserved.

2. Click **Up** or **Down** to move the search path in the list.
3. Restart Deep Exploration.

To delete a user-defined search path:

1. Select the search path in the search paths list.
2. Click **Delete**.
3. Click **OK** and restart Deep Exploration.

Interface

Search paths—Used to view and select the search paths through which the application searches for texture maps.

- **Folder path and name**—Selects and clears the search paths.
- **Sub-folders**—Used to define the path as 'Recursive'. That is, to search through all sub-folders relating to the path.

Add—Used to add a search path.

Delete—Used to delete the selected search path.

Edit—Used to edit the selected search path.

Up—Moves the selected search path up the search paths list.

Down—Moves the selected search path down the search paths list.

OK—Applies the settings and closes the dialog. Any changes made to the settings are saved.

Cancel—Closes the dialog. Any changes made to the settings are lost.

Help—Opens the relevant Help topic.

Copyright © Right Hemisphere 2007. All Rights Reserved.

Colors Tab

Menu bar > Tools > Options > Colors tab

The Colors tab is used to apply colors for the display of scene elements. For example, you can display the bounding box in green and vertices in red. Once modified, you can restore the default colors. The default material setting (on page 289) can also be modified.

The color settings for various elements including the scene bounding box, scene axes, and vertices, are displayed via the Display menu (on page 257) and Display toolbar (on page 368).

Note: Many of these color settings can also be modified via the Scene Properties dialog. They are unrelated to the Render modes (on page 70).

Changing the color of an element affects all file formats. Note that the color can only be changed for elements that have been enabled in the original images or model.

Please note that if you modify the bounding box, vertices, wire frame, object axes, and surface normals settings, you must select the related check boxes on the 3D View tab to apply your color settings.

Procedure

To apply a color to a scene element, do one of the following:

- Select an element in the Colors window, click **Edit**, select a color in the color selector, and then click **OK**.
- Double-click an element in the Colors window, select a color in the color selector, and then click **OK**.

Interface

Background top—Used to set the color of the upper half of the viewports' background gradient.

Background bottom—Used to set the color of the lower half of the viewports' background gradient.

Illustration Background top—Used to set the color of the upper half of the viewports' illustration background gradient.

Illustration Background bottom—Used to set the color of the lower half of the viewports' illustration background gradient.

Bones—Used to set the color of the model's bone structure.

Bone influence area—Used to set the color of the areas influenced by bones.

Bounding box of all objects—Used to set the color of the bounding box lines that surround all objects.

Bounding box of scene—Used to set the color of the bounding box lines that surround the scene.

Bounding box of selected objects—Used to set the color of the bounding box lines that surround selected objects.

Transparent bounding box—Used to set the color of the transparent bounding boxes that surround all objects.

Shadow—Used to set the color of the scene shadow.

Copyright © Right Hemisphere 2007. All Rights Reserved.

Default material ambient color—Used to set the color of the general light that illuminates the entire scene. Ambient light has a uniform intensity and is uniformly diffuse. It has no discernible source and no discernible direction.

Default material diffuse color—Used to set the color of the diffuse light that is reflected in a scene. Because most scenes contain much more diffuse light than ambient light, diffuse reflection plays the largest part in determining the overall color. Additionally, because diffuse light is directional, the angle of incidence for diffuse light affects the overall intensity of the reflection. Diffuse reflection is at its greatest when the light strikes a vertex parallel to that vertex normal. As the angle of reflection increases, the effect of the diffuse reflection diminishes. The amount of light reflected is the cosine of the angle between the incoming light and the vertex normal.

Note: Files may display differently in the viewport if you change the diffuse color material.

Default material specular color—Used to set the color that creates highlights on objects making them appear shiny, that is, the reflection.

Default material emissive color—Used to set the color that makes a rendered object appear self-luminous. Emission affects an object's color and can, for example, make a dark material brighter and take on part of the emitted color.

Faces in Line Illustration mode (on page 70)—Used to set the color of the faces in Line Illustration mode.

Selected faces—Used to set the color of selected faces.

Lines in Line Illustration mode (on page 70)—Used to set the color of the line when displaying a scene in Line Illustration and Hidden Wireframe modes.

Lines in Shaded Illustration mode (on page 70)—Used to set the color of the lines in Shaded Illustration and Solid Outline modes.

Lines in Wireframe mode (on page 70)—Used to set the color of the lines in the various Wireframe modes.

Selection highlight (on page 282)—Used to set the color of the selected object's highlights.

Solid grid light cell (on page 85)—Used to set the color of the lighter cells of the solid grid, or ‘floor’ of the scene.

Solid grid dark cell (on page 85)—Used to set the color of the darker cells of the solid grid.

Transparent grid light cell (on page 85)—Used to set the color of the lighter cells of the transparent grid.

Transparent grid dark cell (on page 85)—Used to set the color of the darker cells of the transparent grid.

Subdivision control mesh—Used to set the color of the subdivision surface control mesh.

Surface normals—Used to set the color of surface normals.

Vertex-cross color—Used to set the color of the crosses representing an object's vertices.

Vertices in Vertices mode (on page 70)—Used to set the color of the vertices when displayed in Vertices mode.

Viewport labels (on page 63)—Used to set the color of the viewport labels.

Wire grid—Used to set the color of the lines of the wired grid, or 'floor'.

X Axis (on page 80)—Used to set the color of the x-axis of the selected object and the world coordinate system, or 'axes'.

Copyright © Right Hemisphere 2007. All Rights Reserved.

Y Axis (on page 80)—Used to set the color of the y-axis of the selected object and the world coordinate system.

Z Axis (on page 80)—Used to set the color of the z-axis of the selected object and the world coordinate system.

Cross section outline—Used to set the color of the cross section plane's outline.

Cutting plane—Used to set the color of the cutting plane.

Non safe frame area—Used to set the color for the area outside the safe frame area.

Safe frame border—Used to select the color of the border for the safe frame area.

Detailed view border—Used to select the color of the detailed view border.

Illustration detailed view border—Used to select the color of the detailed view border when you are in illustration mode.

Reset—Restores the default settings.

Settings—Opens the Default Material dialog and is used to modify the properties of the default material.

Edit—Used to open the color selector and select a color to apply to the selected element.

OK—Applies the settings and closes the dialog. Any changes made to the settings are saved.

Cancel—Closes the dialog. Any changes made to the settings are lost.

Help—Opens the relevant Help topic.

Default Material

Menu bar > Tools > Options > Colors tab > Settings

The properties for the default material that is used by Deep Exploration can be modified. Changing these properties affects all file formats. Some formats may contain materials. Plugins that handle 3D formats with materials may fill only several material properties (on page 350). Therefore, if you change the default material settings, your scene may display differently, and for this reason, we recommend noting the original material settings should you want to restore them at a later stage.

Procedures

To modify the default material:

1. Click the **Settings** button. The Default Material dialog is displayed.
2. Take a note of the original settings should you want to restore them at a later stage.
3. Make the selections you require.
4. Click **OK**.

To restore the most recently applied material settings:

Click the **Reset** button in the Default Material dialog.

Interface

Glossiness—Determines the level of the material's highlighting. As you increase the glossiness, the highlight gets smaller and the material appears shinier.

Copyright © Right Hemisphere 2007. All Rights Reserved.

Specular level—Determines the intensity of the specular light. You can set the specular level to a very high value to achieve very strong, tight highlights. This value is also known as 'shininess strength'.

Opacity—Determines the opacity of the material. Opacity is the opposite of transparency. As you reduce the opacity value, the material becomes more transparent.

Raytrace reflection—Determines the level of the material's ability to reflect light.

OK—Closes the dialog and saves the settings.

Cancel—Closes the dialog. Any changes made to the settings are lost.

Help—Opens the relevant Help topic.

Reset—Restores the most recently applied material settings.

Files Tab

Menu bar > Tools > Options > Files tab

The Files tab displays file types, their formats and their associated applications. using it you can select the file types that you want loaded into Deep Exploration automatically when they are double-clicked in Windows Explorer. You can also specify:

- Which file types and folders to display in the File list.
- How Deep Exploration is displayed when it starts.
- Select other file type to display in the file associations list.
- Whether to load files independently of the application. This is helpful if you want to continue working in the application while files are loading.

Procedures

To select file types to load into the application automatically:

Do one of the following:

- Click the file type check box in the file associations list.
- Click the **Select All**, **Select 3D,** or **Select 2D** buttons.

When you next double-click those file types in Windows Explorer, they are loaded into the application automatically.

To cancel a file type selection:

Do one of the following:

- Click the file type check box in the file associations list.
- Click the **Clear 3D** or **Clear 2D** buttons.

Interface

Select All—Selects all displayed files.

Select 3D—Selects all displayed 3D files.

Select 2D—Selects all displayed 2D files.

Clear 3D—Clears all 3D files from selection.

Copyright © Right Hemisphere 2007. All Rights Reserved.

Clear 2D—Clears all 2D files from selection.

Visible files—Used to specify the file types you want to display in the Files list.

- **3D file types—**Displays only 3D file types.
- **2D and 3D files—**Displays 2D and 3D file types.
- **All files—**Displays all file types.

Other files—Lets you specify additional file types to be included on the file associations list. You can enter more than one file type by separating them with semicolons. For example: *.DAT;*.BAT.

Show folders—Displays all folders in the File list.

Show parent folder—Displays the parent folder at the top of the File list.

Load file in background—Loads files independently of the application so you can continue to use the application. Note that you can stop loading a file using the Stop button (on page 380).

OK—Applies the settings and closes the dialog. Any changes made to the settings are saved.

Cancel—Closes the dialog. Any changes made to the settings are lost.

Help—Opens the relevant Help topic.

NURBS Tab

Menu bar > Tools > Options > NURBS tab

The NURBS tab is used to control settings for NURBS objects; the industry standard tools for the representation and design of geometric shapes.

You can choose the processor and quality you require for trimming, and you can control the display of the selected NURBS objects. For example, you can display the object's control points grid and trimmed geometry.

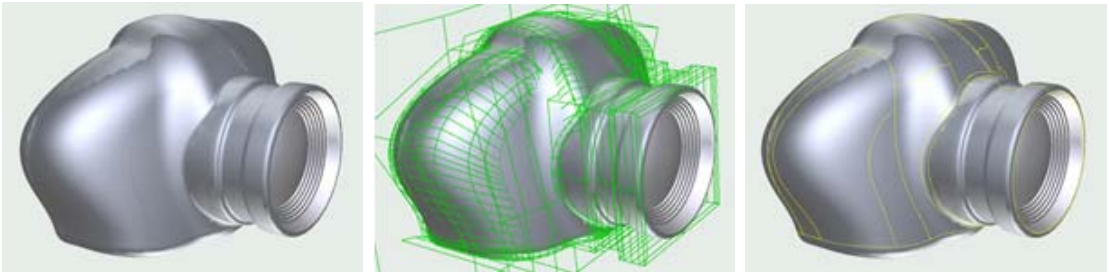

No grid or geometry displayed / Control points grid displayed / Trimmed geometry displayed

Note: If a model contains NURBS, the NURBS information can be displayed in the Object Properties dialog (on page 335) for the selected object.

Interface

Trimmed NURBS processor—Used to select the processor with which to trim the NURBS objects.

Trimmed NURBS quality—Determines the quality of the trimmed NURBS objects from lowest quality (left) to highest quality (right).

Selected NURBS—Used to control the display of selected NURBS objects in the scene.

- **Show control points grid**—Displays the object's control points grid in green.
- **Show trimmed geometry**—Displays any trimmed geometry of the object in yellow.

Copyright © Right Hemisphere 2007. All Rights Reserved.

OK—Applies the settings and closes the dialog. Any changes made to the settings are saved.

Cancel—Closes the dialog. Any changes made to the settings are lost.

Render Tab

Menu bar > Tools > Options > Render tab

The Render tab is used to modify the display renderer properties (on page 259) for the graphics cards installed on your computer. This is helpful if you want to optimize file rendering.

The configuration options differ depending on the selected renderer. For example, if you select Software Z-buffer, you can select to use a second processor if one is installed on your computer, refine the static geometry, and render scenes in high quality.

Note: Properties for rendering scenes can be set using the Renderer Properties dialog (on page 268). If there are multiple cards installed on your computer, scenes are rendered using renderers in the order of DirectX, OpenGL, and then Software Z-buffer.

Procedure

To modify the renderer properties:

1. Make the selections you require in the Common Renderers Properties area.
2. Do one of the following:
   - Double-click the renderer that you want to configure.
   - Select the renderer and click **Configure**.
3. Change the properties as required and click **OK** twice.
4. Restart Deep Exploration.

Interface

Common Renderer Properties—Used to modify the properties common to all renderers.

- **2-sided lighting for back-facing polygons**—Lights all back-facing polygons where possible.
- **Do not redraw scene on window expose**—Displays a copy of the scene from the information in the graphics card back buffer without regenerating the whole scene.
- **Incremental window update**—Uses the incremental window update when rendering; only the updated window region is repainted.
- **Z-buffer**—Selects the Z-buffer bit type with which to render files; 16, 24, or 32-bit.

Drivers—Lists all the available display renderers.

Configure—Opens the selected renderer's Properties dialog and is used to modify the renderer's properties.

OK—Applies the settings and closes the dialog. Any changes made to the settings are saved.

Cancel—Closes the dialog. Any changes made to the settings are lost.

Help—Opens the relevant Help topic.

Copyright © Right Hemisphere 2007. All Rights Reserved.

MS DirectX Properties Dialog

Menu bar > Tools > Options > Render tab > MS DirectX 8.0 > Configure
Menu bar > Tools > Options > Render tab > MS DirectX 9.0 > Configure

The MS DirectX 8.0 or MS DirectX 9.0 Properties dialog is used to modify the properties for the selected graphics cards.

Interface

Driver—Displays, and is used to update the driver's properties.

- **Automatic configuration—**Configures the display renderer settings automatically.
- **Pure device**—Uses the pure device mode for rendering. This is a variant of the HAL device and supports hardware vertex processing only. It allows only a small subset of the device state to be queried by Deep Exploration. In addition, the pure device is available only on adapters that have a minimum level of capabilities.
- **HAL—**Uses the Direct3D HAL device mode for rendering. The Direct3D HAL is implemented by the chip manufacturer, board producer, or OEM. The HAL implements only device-dependent code and performs no emulation. If a function is not performed by the hardware, the HAL does not report it as a hardware capability. Additionally, the HAL does not validate parameters; Direct3D does this before the HAL is invoked.
- **Vertex processing**—Used to select the vertex processing mode for the MS DirectX 9.0 HAL device.
  - **Hardware—**Enables the device to perform hardware vertex processing. The performance of this type of processing is comparable to that of software vertex processing.
  - **Mixed—**Enables the device to perform both software and hardware vertex processing.
  - **Software—**Enables the device to perform software vertex processing. This provides a guaranteed set of vertex processing capabilities, including an unbounded number of lights and full support for programmable vertex shaders.
- **Store geometry in video memory**—Speeds up rendering if there is enough memory on the computer's graphic card by storing the geometry in the video memory via the index and vertex buffers.
- **Antialiasing**—Allows antialiasing to be applied to rendered scenes. Antialiasing is the smoothing of the staircase effect that occurs when diagonal or curved lines, or borders are drawn on raster illustrations consisting of square or rectangular pixels. The higher the value, the smoother the rendered output.
- **Enable custom shaders**—Allows shaders to be displayed in scenes.

Copyright © Right Hemisphere 2007. All Rights Reserved.

Software Z-Buffer Properties Dialog

Menu bar > Tools > Options > Render tab > Software Z-Buffer > Configure

The Software Z-Buffer Properties dialog is used to modify the Software Z-buffer graphics card properties.

Interface

Use second processor—Attempts to increase rendering performance if a second processor is present on the computer. This can be up to 10-40% depending on the computer's hardware and the current model geometry.

Refine static geometry—Applies an antialiasing pass in the background if the scene has not been rotated or modified. Antialiasing is the smoothing of the staircase effect that occurs when diagonal or curved lines, or borders are drawn on raster illustrations consisting of square or rectangular pixels. It is used to improve the quality of the rendered output.

Render scene in high quality if number of triangle less than—Always renders the scene in full-screen antialiasing mode.

Note: This option may reduce rendering performance.

Slide Show Tab

Menu bar > Tools > Options > Slide Show tab

Deep Exploration can display a series of 2D and 3D files as a slide show (on page 191). Using the Slide Show tab, the slides can be configured to show each slide for a specified number of seconds before the next one appears. You can also automate the scene rotation on both the X and Y axis.

Interface

Timed Slide Show—Use the slider to determine the number of seconds each slide is displayed.

Automate Scene Rotation—Used to set the camera rotation.

- **X direction**—Determines the direction of the camera rotation around the X axis
- **Y direction**—Determines the direction of the camera rotation around the Y axis.
- **Change rotation speed and direction**—Changes the camera rotation speed and direction.

OK—Applies the settings and closes the dialog. Any changes made to the settings are saved.

Cancel—Closes the dialog. Any changes made to the settings are lost.

Help—Opens the relevant Help topic.

Textures Tab

Menu bar > Tools > Options > Textures tab

The Textures tab is used to define, and select the folders through which Deep Exploration searches for associated texture map images when opening 3D files. It is also used to define how the application loads graphics files.

Deep Exploration searches for the maps through the directories in the following order:

1. The current directory of the map.

Copyright © Right Hemisphere 2007. All Rights Reserved.

2. All folders relative to the current directory if a map has a relative path in the 3D file.
3. If an absolute path is contained within a map, the folder is defined within the absolute path.
4. Any user-defined folder paths and sub-folders listed in the Textures tab.

Search paths are selected by default when added to the search paths list. You can clear the search path check boxes to prevent searching through the related paths.

You can also define search paths as recursive. This prompts the application to search through all sub-folders of the related search path when searching for texture maps.

Any changes you make are applied the next time your computer is started.

Procedures

To add a user-defined search path:

1. Click **Add**.
2. Browse for the folder you require.
3. Click **OK** and restart Deep Exploration.

The folder path and name is displayed in the search paths list.

To enable and disable searching through paths, do one of the following:

1. Do one of the following:
   - Select a search path check box to enable searching.
   - Clear a search path check box to disable searching.
2. Restart Deep Exploration.

To enable and disable searching through path sub-folders, do one of the following:

- Double-click a Sub-folders column cell to enable searching. The path is defined as as 'Recursive'.
- Double-click in a Sub-folders column cell that is defined as 'Recursive' to disable searching.

To edit a user-defined search path:

1. Click the search path you want to edit in the search paths list.
2. Click **Edit** and browse for the required new folder.
3. Click **OK** and restart Deep Exploration.

To change the order of user-defined search paths:

1. Click the search path you want to move.
2. Click **Up** or **Down** to move the search path in the list.
3. Restart Deep Exploration.

To delete a user-defined search path:

1. Select the search path in the search paths list.
2. Click **Delete**.
3. Click **OK** and restart Deep Exploration.

Copyright © Right Hemisphere 2007. All Rights Reserved.

Interface

Search paths—Used to view and select the search paths through which the application searches for texture maps.

- **Folder path and name**—Selects and clears the search paths.
- **Sub-folders**—Used to define the path as 'Recursive'. That is, to search through all sub-folders relating to the path.

Add—Used to add a search path.

Delete—Used to delete the selected search path.

Edit—Used to edit the selected search path.

Up—Moves the selected search path up the search paths list.

Down—Moves the selected search path down the search paths list.

Bilinear filtering—Removes the pixel artifacting. That is, stray pixels of a contrasting color seen when you view a texture map closely. The use of bilinear filtering reduces the display performance on some graphics cards. <only applies_opengl>

Perspective correction—Applies a correction to the perspective of the 3D file. This option affects the rendering method of textured surfaces and although scene rendering is slower, the display of textured surfaces improves.

Use alpha channel in 32 bpp images—Applies 32 bits per pixel with alpha channel (on page 276) to files. Alpha channel can be used only by some file types, for example, Quake 3.

Reload texture on file change—Saves textures painted in a 2D graphics editor such as Adobe Photoshop, so they are automatically reloaded when switching back to the application.

Maximum texture resolution—Used to select the maximum resolution of textures while rendering in Solid render mode. The higher the setting, the better your textures appear, however, the time taken to refresh the scene may increase slightly. <only applies_opengl>

OK—Applies the settings and closes the dialog. Any changes made to the settings are saved.

Cancel—Closes the dialog. Any changes made to the settings are lost.

Thumbnails Tab

Menu bar > Tools > Options > Thumbnails tab

The Thumbnails tab enables you to specify how your 3D and 2D files display as thumbnails (on page 273). You can choose the thumbnail size and background, the thumbnail cache size and in what way you want to generate thumbnails.

Further color and hide settings are available by clicking the More options button.

Procedure

To set the size of the thumbnail images, do one of the following:

- Click an option button, for example, 64 x 64 or 188 x 80. The size is displayed in the preview window and the number fields display the number of pixels.
- Drag the vertical and horizontal sliders. The size is displayed in the preview window and the number fields display the number of pixels.

Copyright © Right Hemisphere 2007. All Rights Reserved.

- Type the number of pixels in the number fields. The size is displayed in the preview window.

Interface

Thumbnail size—Use the option buttons, sliders or the number fields to set the size of the thumbnail images in pixels.

Thumbnails Cache—Used to set the size of the thumbnails cache.

- **Maximum thumbnail disk memory**—Use the slider to determine the cache size.

Thumbnails generation—Used to determine when thumbnails are generated.

- **Manual** (on page 273)—Thumbnails are generated when, and as you require using the Generate Thumbnails dialog.
- **On file load**—Generates thumbnails when the files are opened.
- **Automatic**—Generates thumbnails automatically whenever files are modified.

More Options—Used to display the Additional Thumbnails Properties dialog to select color and element display settings.

- **Background**—Used to set the background color of thumbnails.
  - **Current selection**—Uses the current scene background color.
  - **Window background**—Uses the window background color in your computer display properties.
  - **Custom color**—Used to select and apply to select a custom background color.
- **Hide all special elements**—Hides all special elements from display in the generated thumbnails. For example, the grid, axis, active object frame, and bounding box.

OK—Applies the settings and closes the dialog. Any changes made to the settings are saved.

Cancel—Closes the dialog. Any changes made to the settings are lost.

Help—Opens the relevant Help topic.

3Dx Input Device Settings

Allows you to control the camera using the **6DOF** controller with **3dConnexion spacemouse**.

Interface

Device Active—Makes the device active if checked.

Zoom Sensitivity—Overrides the devices default setting.

Pan Sensitivity—Overrides the devices default setting.

Rotate Sensitivity—Overrides the devices default setting.

Note: For more information refer to the information supplied with your 3dConnexion Spacemouse.

OK—Applies the settings and closes the dialog. Any changes made to the settings are saved.

Cancel—Closes the dialog. Any changes made to the settings are lost.

Copyright © Right Hemisphere 2007. All Rights Reserved.

Help Menu

Menu bar > Help

The Help menu provides access to the application's Help reference system and other helpful information.

Interface

Deep Exploration Help—Displays the application's User Reference (online Help).

Keyboard Shortcuts (on page 433)—Displays the keyboard and mouse shortcuts.

Activate Deep Exploration—Used to activate the application after registration. This command disappears once the application is activated.

Activate Modules—Used to activate the application's modules after registration. This command disappears from the menu once the modules are activated.

Module Information—Links to the module resource Web page. You must have an Internet connection to view this page.

Support—Displays the Right Hemisphere Web site support page.

Internet Update (on page 30)—Opens the Internet Update dialog and is used to establish the settings for updating files using Right Hemisphere's Cortex utility (http://www.righthemisphere.com/support/help/cortex/cortex_readme.htm).

Right Hemisphere—Displays the Right Hemisphere Web site home page.

About Deep Exploration—Displays a range of information about Deep Exploration including the copyright and version information.

Update Dialog

Menu bar > Help > Internet Update

The Internet Update dialog is used to modify the update settings for Deep Exploration, including stopping automatic updates and changing the update frequency. For example, you can set Deep Exploration to be updated by Cortex every month or every week as you require.

Interface

Automatically update with Right Hemisphere server—Updates Deep Exploration automatically when the selected amount of time has passed.

Update—Select the frequency of the update process from the drop down menu, from everyday to once a month.

Update Now—Used to update Deep Exploration immediately (assuming you are connected to the internet).

OK—Closes the dialog and saves the settings.

Cancel—Closes the dialog. Any changes made to the settings are lost.

Copyright © Right Hemisphere 2007. All Rights Reserved.

Workspace

The workspace is used to display the currently opened file. It comprises one or more viewports that are used to view and modify files; it comprises one viewport if the current file is 2D and, if the current file is 3D, it comprises multiple viewports (on page 63) from where different views of the same scene can be displayed.

Note that the workspace is empty when Deep Exploration is first opened.

Viewports

The workspace includes viewports (on page 299) that are used to view and modify the current file. A viewport label is displayed in the top, left of the viewport showing the current view for each viewport, whether transparency and textures are 'on'.

Various right-click menus (on page 390) are available depending on the current file type and where the cursor is positioned when you click. Double-clicking objects in the viewport displays the Object Properties dialogs (on page 335).

Note: Only one viewport is available if the current file is a 2D image, whereas, four viewports are available for 3D files.

Various controls are displayed when file of certain types are opened, that allow you to manage and manipulate those files. For example, if you open a video file, video controls are displayed beneath the viewport that allow you to play and repeat the video.

Note: When you open an HDR file (on page 176), resolution controls are displayed in the Information bar, that allow you to adjust the parts of the image.

Copyright © Right Hemisphere 2007. All Rights Reserved.

Explorer Bar

Menu bar > View > Explorer Bar

The Explorer bar comprises the **Folders** and **Search** panels, and the **History** and **Favorites** lists,and the **Gateway** panel if the Gateway Module (on page 205) is installed on your computer. It is used to show and hide these components and the File list tabs. The lower half of the explorer bar shows the tabs that can be displayed at the bottom of the screen:

My 3D Models—Models and scenes that have been saved to your 'My 3D Models' folder.

Materials—A list of available materials.

Textures—A list of available textures.

Shaders—A list of available textures

Symbols—A list of available symbols.

Note that Deep Exploration's menu bar (on page 248) commands differ depending on the Explorer bar display. For example, if you have an animated 3D file open and the Folders panel displayed, all commands are active on the File menu. However, if the same file is open and the Favorites or History list is displayed, Search Active Folder and Go To Folder commands are inactive.

Copyright © Right Hemisphere 2007. All Rights Reserved.

Folders Panel

Menu bar > View > Explorer Bar > Folders
Standard toolbar > Folders

The Folders panel is used to navigate and manage your folders from with a tree-view hierarchy. Every folder provides easy access to common folder management tasks similar to the functionality in most Windows applications. For example, they can easily be dragged to new locations, copied, moved, renamed, closed, explored, and made available offline using the right-click menus (on page 402).

Files and folders can be dragged between the Folders panel and the File list to move to other folders.

When you display the panel, it is displayed to the left of the viewport by default, and if the Favorites list (on page 302), History list (on page 304), Search panel (on page 305), or Gateway panel (on page 307) is open, it is closed automatically.

The panel also includes a toolbar that can be used to create, rename and delete folders, and to search for files or folders. Note that you can also create folders from within the File list.



Folder panel toolbar

You can double-click folders to expand and collapse them, or you can use the plus and minus buttons .

Procedures

To toggle the display of the Folders panel, do one of the following:

- Choose **View > Explorer Bar > Folders** on the menu bar.
- Click **Folders**  on the Standard toolbar.
- Click the currently displayed panel or list menu bar, and then click **Folders**.

To close the Folders panel:

- Click **Close Folders**  on the Folders panel.

To create a folder:

1. Select the drive folder in which you want to create the folder.
2. Click **Create Folder**  on the Folders panel toolbar.
3. Enter a name for the folder and press ENTER.

To rename a folder:

1. Select the folder that you want to rename.
2. Click **Rename Folder**  on the Folders panel toolbar.
3. Enter a name for the folder and press ENTER.

Copyright © Right Hemisphere 2007. All Rights Reserved.

To search through a folder:

1. Select the drive or folder through which you want to search.
2. Click **Search Active Folder**  on the Folders panel toolbar.
3. Type the name in the File mask field and click **Search**.

Any files that match the search criteria are displayed in a Search tab (on page 388).

To delete a folder, do one of the following:

- Select the folder that you want to delete and click **Delete Folder**  on the Folders panel toolbar.
- Select the folder that you want to delete and press DELETE on your keyboard.
- Right-click the folder that you want to delete in the Folders panel or File list and click **Delete**.

The file or folder and all the folder contents are deleted.

Interface

 **Create Folder**—Creates a new folder within the selected drive or folder.

 **Rename Folder**—Used to rename the selected folder.

 **Search Active Folder**—Opens the Search Active Folder and is used to search through the folder and all its sub-folders for files.

 **Delete Folder**—Deletes the selected folder.

Favorites List

Menu bar > View > Explorer Bar > Favorites
Standard toolbar > Favorites

The Favorites list is used to view and open your most frequently-used files. It displays a list of the files saved to your favorites in a folder hierarchy. You can create, move, rename and delete favorites folders, and rename, move and delete favorites files.

When you display the panel, it is displayed to the left of the viewport by default, and if the Folders panel (on page 300), History list (on page 304), Search panel (on page 305), or Gateway panel (on page 307) is open, it is closed automatically.

The panel also includes a toolbar that can be used to create, rename and delete folders, and to move files between folders.



Favorites list toolbar

All favorites folders and files are saved to, and deleted from the Favorites list using the Favorites menu.

Copyright © Right Hemisphere 2007. All Rights Reserved.

Note: These settings are saved in the favorites.dat file (on page 52) and are preserved when Deep Exploration is updated (on page 30) or uninstalled (on page 448).

Procedures

To toggle the display of the Favorites list, do one of the following:

- Choose **View > Explorer Bar > Favorites** on the menu bar.
- Click **Favorites**  on the Standard toolbar.
- Click the currently displayed panel or list menu bar, and then click **Favorites**.

To close the Favorites list:

- Click **Close Favorites**  on the Favorites list.

To create a favorites folder:

1. Select the folder in which you want to create the folder.
2. Click **Create Folder**  on the Favorites panel toolbar.
3. Enter a name for the folder and press ENTER.

To rename a favorites folder:

1. Select the folder that you want to rename.
2. Click **Rename Folder**  on the Favorites panel toolbar.
3. Enter a name for the folder and press ENTER.

To move a favorites file or folder:

1. Select the file or folder that you want to move.
2. Click **Move to Folder**  on the Favorites panel toolbar.
3. Select the folder under which you want to move the folder or file and click **OK**.

To delete a favorites file or folder:

1. Select the file or folder that you want to delete.
2. Do one of the following:
   - Click **Delete Folder**  on the Favorites panel toolbar.
   - Press DELETE on your keyboard.

The file or folder and all the folder contents are deleted.

Copyright © Right Hemisphere 2007. All Rights Reserved.

Interface

 **Create Folder**—Create a new folder within the selected favorite folder.

 **Rename File / Folder**—Used to rename the selected favorite file or folder.

 **Move to Folder**—Opens the Browse for Folder dialog and is used to move the selected folder to another favorite folder.

 **Delete File / Folder**—Deletes the selected favorite file or folder. Note that favorites can also be deleted pressing DELETE on your keyboard.

History List

Menu bar > View > Explorer Bar > History
Standard toolbar > History

The History list is used to view and open the most recently browsed 3D files. You can display the list in either a detailed or thumbnail view. When you display the panel, it is displayed to the left of the viewport by default, and if the Folders panel (on page 300), Favorites list (on page 302), Search panel (on page 305), or Gateway panel (on page 307) is open, it is closed automatically.

The panel also includes a toolbar that can be used to display the list in either a thumbnail or detailed view.



History list toolbar

Note: These settings are saved in the history.dat file (on page 52), and are preserved when Deep Exploration is updated (on page 30) or uninstalled (on page 448).

Procedures

To toggle the display of the History list, do one of the following:

- Choose **View > Explorer Bar > History** on the menu bar.
- Click **History**  on the Standard toolbar.
- Click the currently displayed panel or list menu bar, and then click **History**.

To close the History list, with the list displayed:

- Click **Close History**  on the History list.

To switch between the views, do one of the following:

- Click **Thumbnails**  on the History list toolbar to display the list in a thumbnail view.
- Click **Details**  on the History list toolbar to display the list in a detailed view.

Copyright © Right Hemisphere 2007. All Rights Reserved.

To delete the History list:

1. Navigate to C:\Documents and Settings\[user name]\Application Data\Right Hemisphere\Deep Exploration.
2. Delete the history.dat file.

Interface

 **Thumbnails**—Displays a thumbnail view with the name of each file.

 **Details**—Displays detailed information for each file.

Search Panel

Menu bar > View > Explorer Bar > Search
Standard toolbar > Search

The Search panel is used to search for files (on page 48) through local drives, network drives, and the Web.

Each time you perform a search, a Search tab is displayed in the File list that shows all the files that match the search criteria. These tabs can be used to refine your search further, and they can be closed as required.

When you display the panel, it is displayed to the left of the viewport by default, and if the Folders panel (on page 300), Favorites list (on page 302), History list (on page 304), or Gateway panel (on page 307) is open, it is closed automatically. The panel also includes a toolbar that can be used to perform new searches and open the Help search topic.



Search panel toolbar

The panel's contents differ depending on the type of search you perform: a local file search or a Web search.

A right-click menu is available, depending on where your cursor is located in the panel, from where you can undo, cut, copy, paste, and delete the bar's contents similar to the functionality in most Windows applications.

Procedures

To toggle the display of the Search panel, do one of the following:

- Choose **View > Explorer Bar >** Search on the menu bar.
- Click Search  on the Standard toolbar.
- Click the currently displayed panel or list menu bar, and then click Search.

To close the Search panel:

- Click **Close** Search  on the Search panel.

Copyright © Right Hemisphere 2007. All Rights Reserved.

Interface

 **New Search** (on page 48)—Opens the Search Active Folder and is used to search through the folder and all its sub-folders for files.

 **Help**—Opens the relevant Help topic.

Local File Search Panel

Search panel > Local file search

The Local File Search panel is used to search for files (on page 48) through local and network drives.

Interface

File name—The name of the files for which you want to search.

File type—Used to select the format of the files for which you want to search.

Look in—Used to select the drive through which you want to search for the files.

Search sub-folders—Used to search through the selected drive and all its sub-folders only.

Search—Performs the search through the selected drive.

Stop—Stops the search process.

Local file search—Displays the Local File Search panel and is used to search for files through a local or network drive.

Web search—Displays the Web panel and is used to search for 2D and 3D files through the Web.

Web Search Panel

Search panel > Web search

The Web Search panel is used to search for 2D and 3D files (on page 48) through the Web.

Interface

File name—The name of the files for which you want to search.

Search For—Used to select the type of file for which you want to search.

- **Models**—Searches for 3D scene files.
- **Textures**—Searches for 2D image files.

Search Settings (on page 307)—Opens the Web Search Settings dialog and is used to establish settings for searching through the Web.

Open download folder (on page 49)—Opens the destination folder of any downloaded files.

Search—Performs the search through the Web.

Stop—Stops the search process.

Copyright © Right Hemisphere 2007. All Rights Reserved.

Local file search—Displays the Local File Search panel and is used to search for files through a local or network drive.

Web search—Displays the Web panel and is used to search for 2D and 3D files through the Web.

Web Search Settings Dialog

Search panel > Web search > Search Settings

The Web Search Settings dialog is used to establish the settings for searching through the Web.

Interface

2D Files—Used to add the 2D extensions for which Deep Exploration searches for those files types. For example, jpg, gif.

- **Add extension**—Used to add 2D extensions to the extension list.
- **Add**—Adds the extension entered in the 'Add extension' field to the extension list.
- **Extensions**—The list of 2D extensions for which Deep Exploration searches.
- **Remove**—Removes the selected extension from the extension list.

3D Files—Used to add 3D extensions for which Deep Exploration searches for those files types. For example, rh, 3ds.

- **Add extension**—Used to add 3D extensions to the extension list.
- **Add**—Adds the extension entered in the 'Add extension' field to the extension list.
- **Extensions**—The list of 3D extensions for which Deep Exploration searches.
- **Remove**—Removes the selected extension from the extension list.

Download folder—The folder into which located files are downloaded.

Browse—Used to browse for and select the folder in which the located files are downloaded.

Number of search threads—The number of concurrent searches Deep Exploration performs.

OK—Closes the dialog and saves the settings.

Cancel—Closes the dialog. Any changes made to the settings are lost.

Copyright © Right Hemisphere 2007. All Rights Reserved.

Gateway Panel

Menu bar > View > Explorer Bar > Gateway

The Gateway panel becomes available when you install the Gateway Module (on page 205). It comprises the Gateway tree and various tabs from where you can search for, download, view, and update assets.

Note: Once you have logged in to a server, any projects and categories that were created in Deep Server Web are displayed in the Gateway panel. Please see your Systems Administrator for further information for information on Deep Server Web.

When you display the panel, it is displayed to the left of the viewport by default, and if the Folders panel (on page 300), Favorites list (on page 302), History list (on page 304), or Search panel (on page 305) is open, it is closed automatically. However, you are not logged off any servers to which you are logged in.

Every time a Gateway search is performed, a Search tab is displayed in the File list (on page 384) containing files that match the search criteria. Located assets are then uploaded to Deep Server database. The tree displays a hierarchy view of all uploaded assets, derivatives, and associated files.

Whenever you select an item in the tree that has been downloaded (on page 212), it is displayed in the Deep Exploration viewport. All the derivatives, associated files, and subgroups that correspond to that item are displayed in the Gateway tabs (on page 387) within the File list. Whenever you select an item in those tabs, it is also displayed in the viewport.

Right-click menus (on page 403) are available from where you can add and remove servers, upload and manage assets, assemblies, and derivatives.

Procedures

To toggle the display of the Gateway panel, do one of the following:

- Choose **View > Explorer Bar >** Gateway on the menu bar.
- Click the currently displayed panel or list menu bar, and then click Gateway .

To close the Gateway panel:

- Click **Close** Panel  on the Gateway panel.

Interface

Assemblies tab (on page 309)—Displays the Gateway tree with all uploaded assembly and derivative files within project and category folders, and used to perform a number of procedures including viewing, uploading, and downloading assemblies and derivatives.

Assets tab (on page 310)—Displays the Gateway tree with all uploaded assets files within project and category folders, and used to perform a number of procedures including viewing, uploading, and downloading single assets.

Search tab (on page 213)—Used to search for assets in the Deep Server database.

Server—Displays a list of servers to which you have previously connected.

Login—Displays when you are disconnected and is used to log in to a selected server.

Copyright © Right Hemisphere 2007. All Rights Reserved.

Gateway Tree

Menu bar > View > Explorer Bar > Gateway

The Gateway tree is used to perform most of the Gateway Module functions from within a tree-view hierarchy. Every tree node is indicated by a separate icon.

Right-clicking a node displays a right-click menu with which you can use to perform a variety of functions including adding and removing servers, uploading assets, and downloading single assets, assemblies, and derivatives.

Note that folders displayed in the panels can be a project added to Gateway (on page 209), a category defined in Gateway (on page 209), or a project or category created in Deep Server Web. Please see your Systems Administrator for further information for information on Deep Server Web.

Interface

 **Server node** (on page 207)—The node of the added servers.

 **Logged in** (on page 207)—Indicates that you are logged into the selected server.

 **Logged out** (on page 207)—Indicates that you are logged out of the selected server.

 **Assembly node** (on page 309)—The node of the uploaded assembly or sub-assembly.

 **Single asset node** (on page 310)—The node of the uploaded asset.

 **Part node** (on page 309)—The node of the uploaded part.

 **Download button** (on page 212)—Indicates that the asset or derivative has not been downloaded.

 **Downloaded button** (on page 212)—Indicates that the asset or derivative has been downloaded into the temporary files cache (on page 405).

Copyright © Right Hemisphere 2007. All Rights Reserved.

Assemblies Tab

Menu bar > View > Explorer Bar > Gateway > Assemblies

The Assemblies tab comprises the Gateway tree (on page 309) and a number of context-sensitive right-click menus (on page 403). It is used to perform a number of procedures including viewing, uploading, and downloading assemblies and derivatives, removing derivatives from the temporary files folder, and deleting assemblies from the server.

The right-click menu commands depend on the location of your cursor within the panel. For example, if you right-click a server node, you can log out of the selected server and upload assemblies.

Projects and category folders, and uploaded assemblies (on page 210) are displayed under each server node in the Gateway tree, according to the assembly information stored in the Deep Server database. Sub-assemblies and derivatives are displayed beneath those items according to their individual hierarchy. When you click an item in the panel, all derivatives, associated files, and subgroups are displayed in the Gateway tabs (on page 387).

Note: Folders displayed in the Assemblies tab can be a project added to Gateway (on page 209), a category defined in Gateway (on page 209), or a project or category created in Deep Server Web. Please see your Systems Administrator for further information for information on Deep Server Web.

Assemblies and parts are denoted by the assembly  and part  icons in the Assemblies tab.

Assets Tab

Menu bar > View > Explorer Bar > Gateway > Assets

The Assets tab comprises the Gateway tree (on page 309) and a number of context-sensitive right-click menus (on page 403). It is used to perform a number of procedures including viewing, uploading, and downloading single assets.

The right-click menu commands depend on the location of your cursor within the panel. For example, if you right-click an item node, you can download subgroup files that correspond to that item.

Projects and category folders, and uploaded assets (on page 209) are displayed under each server node in the Gateway tree, according to the asset information stored in the Deep Server database. When you click an item in the panel, all derivatives, associated files, and subgroups are displayed in the Gateway tabs (on page 387).

Note: Folders displayed in the Assets tab can be a project added to Gateway (on page 209), a category defined in Gateway (on page 209), or a project or category created in Deep Server Web. Please see your Systems Administrator for further information for information on Deep Server Web.

Single assets are denoted by the single asset  icon in the Assets tab.

Copyright © Right Hemisphere 2007. All Rights Reserved.

Search Tab

Menu bar > View > Explorer Bar > Gateway > Search

The Search tab is used to search for assets (on page 213) through the Deep Server database.

Each time you perform a search, a Search tab (on page 388) is displayed in the File list that shows all the files that match the search criteria. These tabs can be used to refine your search further, and they can be closed as required.

The panel's contents differ depending on the type of search you perform: a local file search or a Web search.

A right-click menu is available, depending on where your cursor is located in the panel, from where you can undo, cut, copy, paste, and delete the bar's contents similar to the functionality in most Windows applications.

Interface

Server (on page 207)—Used to select the server through which to search for assets.

Basic Search tab (on page 311)—Used to search for assets based on one or more keywords.

Advanced Search tab (on page 311)—Used to search for assets by specifying additional search terms to narrow the search.

Basic Search Panel

Gateway panel > Search tab > Basic Search

The Basic Search tab is used to search for assets (on page 213) based on one or more keywords. The search is not case sensitive.

Interface

Keyword—Search criteria that is associated with the asset for which you are searching.

Search—Searches for assets based on the search criteria.

Reset—Clears all the criteria from the search fields.

Advanced Search Panel

Gateway panel > Search tab > Advanced Search

The Advanced Search page can be used to search for assets (on page 213) by specifying additional search terms to narrow the search. The terms can include asset properties such as names, category to which assets belong, and metadata.

Interface

Asset name—Searches for assets by asset name. For assembly and part assets, this name comes from the related XML file. For single assets, this is the file name without the file extension. For example, for a single asset of which the file name is 'audi.3ds', the asset name is 'audi'.

Category—Searches for assets by category.

Date uploaded—Searches for assets that were uploaded within the specified range.

Copyright © Right Hemisphere 2007. All Rights Reserved.

- **Start**—The first date from which to search for assets.
- **End**—The last date to which to search for assets.

File name—Searches for assets by the asset's original file name.

File size—Searches for assets that fit within the specified range.

- **Min**—The minimum size of the assets on which to search.
- **Max**—The maximum size of the assets on which to search.

Instance name—Searches for assets by instances of assets within the database.

Metadata—Searches for assets by metadata.

Project—Searches for assets by the project in which asset has been grouped or assigned.

Uploaded by—Searches for assets by the name of the person who performed the upload.

Search—Searches for assets based on the search criteria.

Reset—Clears all the criteria from the search fields.

Copyright © Right Hemisphere 2007. All Rights Reserved.

Controls

Menu bar > View > Controls and Toolbars
Right-click menu bar
Customize Layout dialog > Controls tab

Controls are tools that give you added functionality for managing and modifying files. For example, the Animation controls allow you to play and pause animations, the Level of Detail slider can be used to view the model at any available LOD, and the Object Position controls are used to move objects within the model along their individual axes.

You can set each control to display automatically (on page 422) if a file includes functionality that relates to that toolbar. For example, if a file includes animation and the Animation Timeline control is set to automatic, the timeline is displayed when the file is opened.

Controls can be resized, moved, floated, docked, and closed (on page 422) similar to the functionality in most Windows applications. They are displayed as docked by default and have a Windows-type interface. Individual controls can be shown or hidden.

Interface

Address Bar (on page 313)—Used to navigate to and access drives and folders.

Animation Controls (on page 314)—Displays and hides the Animation controls. They are located to the left of the Status bar by default.

Animation Timeline (on page 318)—Displays and hides the animation timeline.

Audio Controls (on page 320)—Automatically displayed when an audio file is opened and is used to control the sound.

Display Settings Panel (on page 321)—Opens the Display Settings panel and is used to select and save display settings within a theme, or to select an existing theme to apply to the display.

Information Bar (on page 323)—Used to view various scene, file, object, and material information relating to the current scene.

Level of Detail Controls (on page 325)—Used to view models at any available LOD.

Model Views Panel (on page 327)—Displays and hides the Model Views panel.

Object Position Controls (on page 328)—Used to transform individual and grouped objects along their individual axes interactively.

Scene Components Panel (on page 329)—Displays and hides the Scene Components panel.

Step Views Panel (on page 359)—Displays and hides the Steps panel.

Video Controls (on page 361)—Automatically displayed when an video file is opened and is used to control the video.

Copyright © Right Hemisphere 2007. All Rights Reserved.

Address Bar

Menu bar > View > Controls and Toolbars > Address Bar
Right-click menu bar > Address Bar
Customize Layout dialog > Controls tab > Select Address Bar > OK

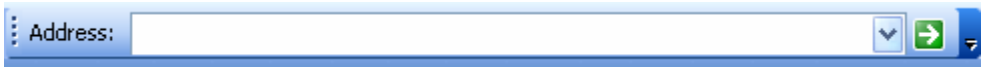

The Address Bar is used to navigate and provide easy access to folders and drives. It automatically updates as when navigating through the Folders panel (on page 300) to display the current drive or folder.

The auto-complete feature saves any previous address entries you've made. As you type information in the Address field, all possible matches are displayed in a suggestion list. You can use this list to select from addresses you have visited previously.

The bar can be resized, moved, floated, docked, and closed (on page 422). A right-click menu is available from where you can undo, cut, copy, paste, and delete the bar's contents similar to the functionality in most Windows applications.

Procedures

To go to a new address:

Type the address in the Address bar and click the **Go To**  button.

To go to a previous address, do one of the following:

- Start typing the address in the Address bar and then click the address that you want in the suggestion list.
- Click the Address bar down arrow and click the address you want in the suggestion list.

Interface

Address—The path or folder or drive to where you want to move.

 **Go To**—Navigates to the address entered in the Address field.

Copyright © Right Hemisphere 2007. All Rights Reserved.

Animation Controls

Menu bar > View > Controls and Toolbars > Animation Controls
Right-click menu bar > Animation Controls
Customize Layout dialog > Controls tab > Select Animation Controls > OK



The Animation controls are used to control scene animation (on page 109). They include a time/frame slider and animation options, and are only available when a scene is animated.

The controls can be resized, moved, floated, docked, and closed (on page 422) similar to the functionality in most Windows applications.

Interface

Time / frame slider—Used to show the real-time status of the animation in progress, the current frame number, the total number of frames, and manually advance through the animation.

Note: You can also double-click the slider to display the Animation Options dialog.

 **Reverse**—Plays the animation in reverse.

 **Stop**—Stops the animation from playing.

 **Forward**—Plays the animation forward.

Animation controls menu—Used to modify animation settings, the type of play (simple, cyclic, ping-pong), and to select an animation sequence, if any.

- **Simple**—Sets the animation to play once from beginning to end.
- **Cyclic**—Sets the animation to play continuously from beginning to end.
- **Ping-pong**—Sets the animation to play continuously back and forth from beginning to end, and from end to beginning.
- **Options** (on page 315)—Opens the Animation Options dialog and is used to create animation sequences for the scene, and modify the animation settings.
- **Sequences**—Used to view a specific sequence in the animation. This command is only available if more than one sequence has been created for the animation.
  - **Default**—Moves to the default sequence.
  - **[sequence name]**—Moves to the selected sequence.
- **Customize Layout** (on page 256)**—**Opens the Customize Layout dialog and is used to control the display of the various user interface components.
- **Auto Show / Hide**

Copyright © Right Hemisphere 2007. All Rights Reserved.

Animation Options Dialog

Animation Controls > Down arrow > Options
Animation Controls > Double-click frame slider

Using the Animation Options dialog, you can create multiple animation sequences for the scene, and control various animation settings including frame rate, duration, and time display.

The Sequence window displays a list of the animation sequences (on page 110), including the default sequence. That is, the current scene animation. You can add and edit sequences including the default sequence. However, the default sequence cannot be deleted.

Note 1: If a scene has an animated explosion created using the CADTools (on page 116) toolbar, an Explode sequence is displayed in the sequence list. This sequence can be removed by removing the animated explosion (on page 130).

Note 2: This dialog can also be opened via the Animation timeline (on page 318) when duplicating sequences.

Procedure

To open the Animation Options dialog, do one of the following:

- Click the down arrow on the Animation toolbar and then click **Options**.
- Double-click the frame slider on the Animation toolbar.

Interface

Sequence window—Displays the current scene's animation sequence.

- **Start**—The number of the frame where the animation begins.
- **End**—The number of the frame where the animation ends.
- **FPS**—The frames per second, that is, the number of frames of an animation sequence that are displayed every second. This setting reflects on the playback system as various film, computer, and TV playback systems differ.

  Note: The higher the frame rate, the more processing power and system bandwidth are required.

Add (on page 110)—Used to add a sequence.

Delete (on page 110)—Used to delete the selected sequence.

Edit (on page 110)—Used to edit the selected sequence.

Playback Control—Used to select the percentage playback speed and to skip frames.

- **Speed**—Determines the percentage playback speed, that is, the speed the step plays as a percentage of real-time speed. For example, if the step is 10 seconds long and you enter 100%, it will take 10 seconds to play. However, if you enter 50%, the step will take 20 seconds to play.
- **Skip frames**—Skips frames if the computer cannot keep pace with the current frame rate (FPS). This causes certain frames to be missed when playing the animation. Otherwise, all frames are displayed during playback even if they are not displayed at the current frame rate.

Continuous time—Calculates the animation between frames (frame interpolation) using the real time value. For example, 1,250 seconds. Otherwise, the closest key time value is used. For example, 1 second, even if the animation is in between 1 second and 2 second frames.

Snap to frames—Moves from frame to frame, without frame interpolation, when playing the animation.

Copyright © Right Hemisphere 2007. All Rights Reserved.

Time Display—Used to select how to display the time in the frame slider. This setting operates in relation to the FPS. For example, if the time slider is at frame 45, and the FPS is set to 30, the time slider displays the following for each of the different time display options: Frames: 45, Seconds: 1.5, MM:SS: 0:1.50 and SMPTE: 0:1:15.

- **Frames**—Displays the time in frames.
- **Seconds**—Displays the time in seconds.
- **MM:SS**—Displays the time in minutes and seconds.
- **SMPTE**—Displays the time in the Society of Motion Picture Technical Engineers standard. This standard measures video and television production time.

OK—Closes the dialog and saves the settings.

Cancel—Closes the dialog. Any changes made to the settings are lost.

Help—Opens the relevant Help topic.

Sequence Properties Dialog

Animation tree > Right-click sequence > Sequence Properties

The Sequence Properties dialog is used to modify individual animation sequence properties including the sequence name, selecting the frames per second, and the sequence start and end frames.

Procedure

To modify animation sequence settings:

1. Do one of the following to open the Sequence Properties dialog:
   - Open the Animation Options dialog (on page 315), select the animation sequence and click **Edit**.
   - Right-click the sequence in the Animation tree (on page 357) and click **Properties**.
2. Modify the settings as required and click **OK**.

Interface

Name—The name of the selected animation sequence.

Start—Determines the number of the frame where the animation sequence begins.

End—Determines the number of the frame where the animation sequence ends.

FPS—Determines the frames per second, that is, the number of frames of an animation sequence that are displayed every second. This setting reflects on the playback system as various film, computer, and TV playback systems differ.

Note: The higher the frame rate, the more processing power and system bandwidth are required.

OK—Closes the dialog and saves the settings.

Cancel—Closes the dialog. Any changes made to the settings are lost.

Help—Opens the relevant Help topic.

Copyright © Right Hemisphere 2007. All Rights Reserved.

Animation Timeline

Menu bar > View > Controls and Toolbars > Animation Timeline
Right-click menu bar > Animation Timeline
Customize Layout dialog > Controls tab > Select Animation Timeline > OK

The animation timeline can be used to create and modify keyframe animation on models. It shows the animation sequence hierarchy for the selected object, with time progressing in a graph-like display beginning at the left. 'Time' is marked in frames, seconds, MM:SS, or SMPTE in the 'time display slider' depending on the current time display. The relationship of frames to real time varies depending on the FPS setting for the selected sequence. The default is about 30 frames to 1 second.

All sequences for the selected object are displayed in the hierarchy, and each sequence can contain a 'track' for the animation position, rotation, scale, and opacity.

Keys can be created for three different tracks: position, rotation, scale, and opacity. A right-click menu is available to modify the animation tracks. This menu can also be used to insert, edit, and delete keys, and to choose a 'mode' in which to select keys and view the timeline.

Note: When creating keys, the animation movement can become 'jerky' if too many keys are inserted or if they are placed close together.

The purple 'time/frame line' shows your current time or frame depending on the current time display. You can change the view by clicking within the timeline, or by moving the time/frame slider in the animation controls (on page 314). The time/frame line reflects the selected view.

The timeline can be resized, moved, floated, docked, and closed (on page 422) similar to the functionality in most Windows applications. Various right-click menus (on page 399) are available on the hierarchy nodes to edit the animation.

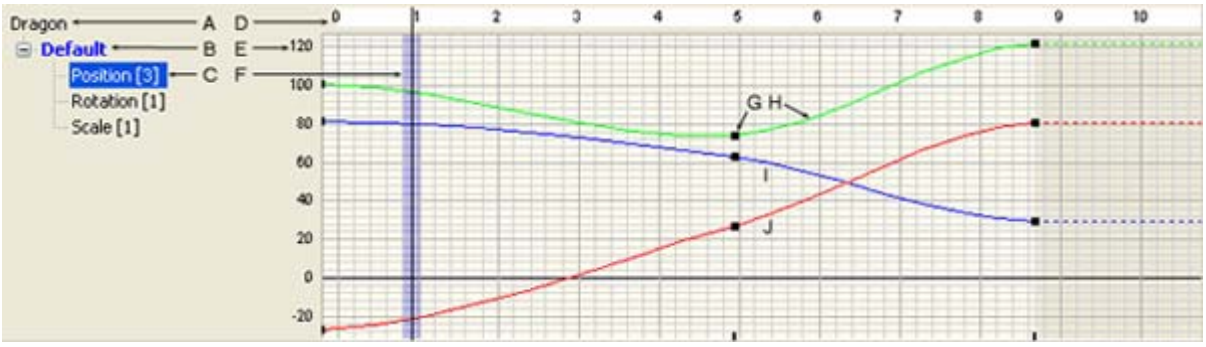

A: Object name
B: Sequence name
C: Current track
D: Time display slider
E: Component values
F: Time/frame line
G: Key
H: X axis (green)
I: Y axis (blue)
J: Z axis (red)

Procedures

To display the timeline:

- Click an **Edit Keyframes** button  for a property in the Object Properties (on page 335) or Material Properties (on page 350) dialogs.
- Click **View > Controls and Toolbars > Animation Timeline** on the menu bar.
- Right-click the menu bar and click **Animation Timeline**.

Copyright © Right Hemisphere 2007. All Rights Reserved.

To display tracks:

Click the tracks in the sequence hierarchy.

To create a key:

1. Select the object to which you want to add a key.
2. Right-click in the time/frame where you want to insert the key.
3. Click **Insert Key**.

A key is inserted on every track for the selected object.

To select a key, do one of the following:

- Click the key in the timeline to select an individual key.
- Drag a box selection in the timeline in Selection mode to select multiple keys.

To edit keys:

1. Select one or more keys.
2. Do one or more of the following:
   - Drag the keys up and down in the timeline to change the component values.
   - Drag the keys along the timeline to change the time/frame.
   - Right-click in the timeline and click **Properties** to edit the keys' properties.
   - Right-click in the timeline and choose **Track Options > TCB Interpolation** or **Track Options > Linear Interpolation** to edit the keys' interpolation (on page 111).
   - Right-click in the timeline and choose **Track Options > Start Cyclic** to set the key as the start point of a cyclic animation.
   - Right-click in the timeline and choose **Track Options > End Cyclic** to set the key as the start point of a cyclic animation.

To delete a key:

1. Select one or more keys.
2. Right-click in the timeline and click **Delete Keys**.

To duplicate a sequence:

1. Right-click the sequence you want to duplicate and click **Duplicate**. The Animation Options dialog (on page 315) is displayed.
2. Click **Add**.

The new sequence is added to the animation. It has the same settings as the originally selected sequence, and can be edited as required.

Interface

Sequence hierarchy—Displays the hierarchy of animation sequences for the selected object.

Note: Various right-click menus are available within the timeline with which to edit the animation.

- **Object name**—The name of the selected object. Note that animation sequence hierarchies are displayed for one object at a time.
- **Sequence name**—The name of the sequences that make up the object's animation.

Copyright © Right Hemisphere 2007. All Rights Reserved.

- **Position**—The track that defines the object's position within the animation. As this track is a vector, it contains X, Y, and Z components. You can apply either TCB or linear interpolation to this track. The world coordinate system (on page 80) is used for this track.
- **Rotation**—The track that defines the object's rotation within the animation. The local coordinate system (on page 80) is used for this track.

  Note: You cannot apply TCB interpolation to this track. However, you can 'fake' the curve by adding multiple keys.

- **Scale**—The track that defines the object's scale within the animation. You can apply either TCB or linear interpolation to this track.
- **Opacity**—The track that defines the object's opacity within the animation.

Time display slider—Shows time progressing in a graph-like display beginning at the left with time marked in frames, seconds, MM:SS, or SMPTE depending on the current time display.

Component values—The value divisions of the selected track.

- **Position**—Values reflect the current the scene units (on page 333).
- **Rotation**—Values are based on degrees.
- **Scale**—Values are based on percentages.
- **Opacity**—Values are between 0 and 1.

Time/frame line—Shows your current time/frame. If you move the time/frame slider in the animation controls, this line reflects the selected view.

Key—A fixed position in time and space.

X axis (green)—The X axis on which the track can be positioned, rotated, or scaled.

Y axis (blue)—The Y axis on which the track can be positioned, rotated, or scaled.

Z axis (red)—The Z axis on which the track can be positioned, rotated, or scaled.

Audio Controls

Open audio file



When you open an audio file (on page 114), sound controls are displayed beneath the viewport. These allow you to play, pause, stop, repeat, and mute the sound. You can also raise and lower the volume.

See also Appendix C: Audio File Formats (on page 542).

Interface



Play—Plays the sound forward.



Pause—Pauses the sound from playing.



Stop—Stops the sound from playing.

Copyright © Right Hemisphere 2007. All Rights Reserved.

 **Repeat**—Sets the sound to play continuously from beginning to end.

 **No Repeat**—Stops the sound from playing continuously from beginning to end.

Volume slider—Determines the level at which to play the sound.

 **Mute**—Mutes the sound while the sound continues to play.

Sound slider—Determines the particular moment in the sound to which to move.

Display Settings Panel

Menu bar > View > Controls and Toolbars > Display Settings
Right-click menu bar > Display Settings
Customize Layout dialog > Controls tab > Select Display Settings > OK

The Display Settings panel is used to modify certain render mode settings in real-time (as you work). These settings can be saved within 'themes', enabling you to apply them to scenes quickly, without needing to modify the individual settings more than once. Your selections are applied to the scene immediately.

For example, you can select the material color overrides for the Shaded Illustration render mode and save them to a theme.

The panel can be resized, moved, floated, docked, and closed (on page 422) similar to the functionality in most Windows applications. The options displayed on the panel differ depending on the selected render mode. It also includes a toolbar that can be used to select, save, and delete themes.



Display Settings panel toolbar

Note: These settings are saved in .theme files (on page 52) and are preserved when Deep Exploration is updated (on page 30) or uninstalled (on page 448).

Procedures

To show the Display Settings panel, do one of the following:

- Choose **View > Controls and Toolbars > Display Settings** on the menu bar.
- Right-click the menu bar and click **Display Settings**.
- Open the Customize Layout dialog, select the Display Settings check box in the Controls tab, and then click **OK**.

To hide the Display Settings panel, do one of the following:

- Choose **View > Controls and Toolbars > Display Settings** on the menu bar.
- Right-click the menu bar and click **Display Settings**.
- Open the Customize Layout dialog, clear the Display Settings check box in the Controls tab, and then click **OK**.

Copyright © Right Hemisphere 2007. All Rights Reserved.

To save display settings as a theme:

1. Open the Display Settings panel.
2. Select the render mode you require in the Render mode field. The options for that render type are displayed.
3. Establish the settings for the render type as required.
4. Click **Save As**  on the Display Settings toolbar.
5. Enter a name for the theme in the File name field and click **Save**.

The display settings for that theme are applied in the viewport.

To select a theme:

1. Open the Display Settings panel.
2. Select the theme you require in the theme field.

To delete a theme:

1. Open the Display Settings panel.
2. Select the theme you want to delete in the theme field.
3. Click **Delete**  on the Display Settings toolbar.

The theme is deleted.

Interface

Theme—Used to select the theme you want to apply to the scene.

Delete—Delete the current theme.

Save As—Opens the Saves As dialog and is used to save the current settings as a theme.

Render mode (on page 70)—Used to select a render mode in which to display the scene.

- **Bounding box**—Used to select a color and background for the bounding box.
- **Transparent bounding box**—Used to select a color and background for the transparent bounding box.
- **Transparent bounding box outline**—Used to select a color and background for the transparent bounding box outline.
- **Vertices**—Used to select a color and background for the vertices.
- **Shaded Vertices**—Used to select color, background, and lighting options for the shaded vertices.
- **Wireframe**—Used to select a color and background for the wireframe.
- **Shaded Wireframe**—Used to select color, background, and lighting options for the shaded wireframe.
- **Solid**—Used to select display options for the solid model.
- **Transparent**—Used to select display options for the transparent model.
- **Solid Wireframe**—Used to select display options for the solid wireframe.
- **Transparent Wireframe**—Used to select display options for the transparent wireframe.
- **Line Illustration**—Used to select display options for a line illustration.

Copyright © Right Hemisphere 2007. All Rights Reserved.

- **Solid Outline**—Used to select display options for the solid outline.
- **Shaded Illustration**—Used to select display options for a shaded illustration.
- **Hidden Wireframe**—Used to select display options for a hidden wireframe.

Lights (on page 73)—Used to select the lighting to apply to the scene.

Use existing lights—Uses all lights from the current file.

Calculate specular lights—Calculates specular lights.

Use default material—Displays the default material on all objects. This is helpful when reviewing files that have very light or dark materials.

Use existing smoothing—Displays the existing smoothing information from the current file.

- **Smoothing angle—**Determines the degree of the smoothing angle.

Show back-facing geometry—Displays any back-facing geometry.

Show transparency—Displays and hides transparency in those materials that are transparent.

Use textures—Displays textures on objects in Solid render mode. The textures are displayed in the most realistic and detailed representation for the scene.

Outline color—Used to set the color for the outline.

Object color—Used to set the top or bottom background color, whichever has the highest luminance, as the object color. That is, the color that is closest to white.

Outline width—Determines the width of the outline.

Outline angle—Determines the angle of the outline.

Vertices color—Used to select a color for the vertices.

Material Override—Used to modify the existing materials' properties.

- **Ambient**—Used to select the transparency and color to apply to the ambient color.
- **Diffuse**—Used to select the transparency and color to apply to the diffuse color.
- **Specular**—Used to select the transparency and color to apply to the specular color.
- **Emission**—Used to select the transparency and color to apply to the emissive color.

Background top—Used to set the color of the upper half of the viewports' background gradient.

Background bottom—Used to set the color of the lower half of the viewports' background gradient.

Copyright © Right Hemisphere 2007. All Rights Reserved.

Information Bar

Menu bar > View > Controls and Toolbars > Information Bar
Right-click menu bar > Information Bar
Customize Layout dialog > Controls tab > Select Information Bar > OK

The Information bar displays an assortment of information relating to the current scene:

- When a scene is first viewed or if no objects are selected, the file icon, name, type, size, and the number of objects, lights, materials, vertices, and faces are displayed.
- When an object is selected, the object name and the number of object points, faces, and materials are displayed.
- The 'External files' link may be available if the file contains textures. For example, if an .asm file contains parts or assemblies, those parts and sub-assemblies are added to an external files list and the External Files link is displayed. External files typically represent textures, parts or assembly files (.asm format), material libraries (.obj format), prototypes (.vrml format), and include files (.vrml, .wrl formats).
- The 'Scene information' link may be available for certain scenes. For example, if the current file contains PMI, the PMI statistics are displayed when you click the link.

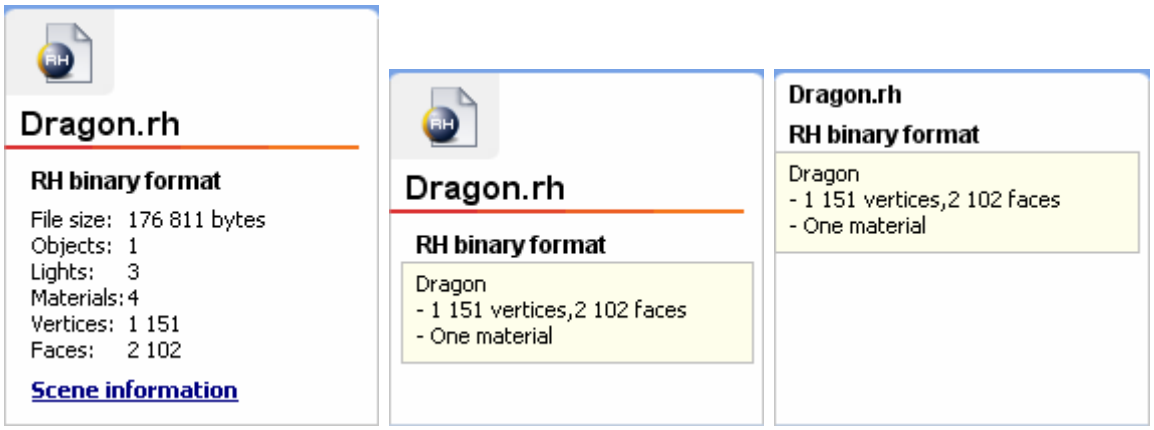

Information bar: Classic no selection / Classic object selected / Compact object selected

A right-click menu (on page 412) is available from where you can display the bar in a compacted or classic view.

The bar can be resized, moved, floated, docked, and closed (on page 422) similar to the functionality in most Windows applications.

Procedures

To display related external files:

With no objects or materials selected, click the **External Files** link.

To display scene information:

With no objects or materials selected, click the **Scene information** link.

To display a classic or compact view, do one of the following:

- Right-click the Information bar and click **Compact View** to reduce the size of the bar.
- Right-click the Information bar and click **Classic View** to display the regular view of the bar.

Copyright © Right Hemisphere 2007. All Rights Reserved.

Interface

External files—Displays all external texture files used by the current scene. This link is only displayed if the file contains external textures (on page 107).

Scene information—Displays information relating to the scene if the format supports such information. For example, file related comments such as author copyrights.

Level of Detail Controls

Menu bar > View > Controls and Toolbars > Level of Detail
Right-click menu bar > Level of Detail
Customize Layout dialog > Controls tab > Select Level of Detail > OK



Certain file formats store level of detail (LOD). LOD is a way of displaying models with different numbers of polygons depending on how close they are to the camera. It can speed up the rendering time by limiting the number of polygons that need to be drawn when viewing models from either a distance or at a close range.

There are two methods utilized by files to store LOD:

- Explicit. Several different versions of each mesh are explicitly stored in the scene hierarchy. Each mesh corresponds to a different LOD. For example, OpenFlight files use this method to store LOD.
- Dynamic. Meshes for each LOD are created dynamically and are not necessarily visible in the scene hierarchy. For example, U3D files store a continuous LOD.

LOD can be imported (on page 40) for files that store it, and then the Level of Detail slider can be used to view the model at any available LOD. The slider also displays the current LOD.

The following examples show the same model displayed in the first instance with a low LOD, and in the second instance with a high LOD; the difference is most significant between the wheels and the vehicle's interior.

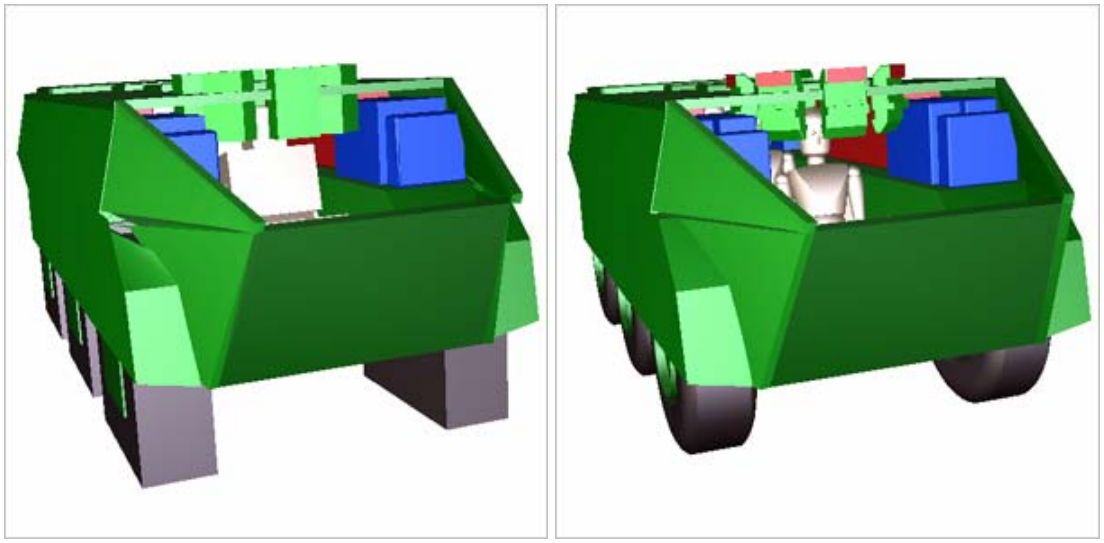

Low level of detail / High level of detail

The controls can be resized, moved, floated, docked, and closed (on page 422) similar to the functionality in most Windows applications.

Copyright © Right Hemisphere 2007. All Rights Reserved.

Procedure

To view different LODs:

1. Ensure the file was imported with LOD.
2. Move the Level of Detail slider until the LOD you want is displayed.

Interface

Level of Detail slider—Shows your current LOD and is used to display all the available LODs.

Metadata Browser

Menu bar > View > Controls and Toolbars > Metadata Browser

Tool where you can edit metadata in individual objects or the complete scene. Metadata will be exposed on a per-scene and per node basis, and can be viewed, deleted and edited via the properties dialog. Double clicking any item in the list will launch the Metadata dialog (on page 376) box.



Interface

 **Delete Selected Metadata**— Option to delete metadata from a node, (or open properties dialog to delete or edit individual values).

 **Import Metadata**—Allows the import of metadata from a file.

 **Export Metadata**—Allows the export of metadata to a file.

 **Options**—Used to set metadata options.

- **Export Options**
  - **Save metadata from selected nodes**:
    - **ON**—Only items selected in the browser pane will be saved.
    - **OFF**—All items from the browser window will be saved.
  - **Include empty nodes**:
    - **ON**—"Empty" metadata will be output for nodes which do not appear in the browser.
    - **OFF**—No information is exported about nodes which do not appear in the browser.
- **Generate Export Filename**
  - **Name of model**—Source file name.
  - **Timestamped name**—Date and time file was saved.
  - **Sample**—Example of what the filename will look like.

OK—Closes the dialog and saves the settings.

Cancel—Closes the dialog. Any changes made to the settings are lost.

Help—Opens the relevant Help topic.

Copyright © Right Hemisphere 2007. All Rights Reserved.

Model Views Panel

Menu bar > View > Controls and Toolbars > Model Views
Right-click menu bar > Model Views
Customize Layout dialog > Controls tab > Select Model Views > OK



The Model Views panel presents, and is used to control all user-defined model views; you can create and delete model views, and modify their properties.

The panel can be resized, moved, floated, docked, and closed (on page 422) similar to the functionality in most Windows applications. The options displayed on the panel differ depending on the selected render mode.

A right-click menu (on page 413) is available from where you can activate the views and edit their names. It also includes a toolbar that can be used to select, save, and delete themes.

Procedure

To toggle the display of the Model Views panel, do one of the following:

- Choose **View > Controls and Toolbars > Model Views** on the menu bar.
- Right-click the menu bar and click **Model Views**.
- Open the Customize Layout dialog, select or clear the Model Views check box in the Controls tab, and then click **OK**.

Interface

 **Create** (on page 77)—Creates a model view based on the current camera, render mode, and selected objects.

 **Delete** (on page 77)—Deletes the selected model view.

 **Thumbnails**—Displays a thumbnail view with the name of each file.

 **Activate** (on page 77)—Plays the model view forward.

Model View Properties Dialog

Model Views panel > Right-click model view > Model View Properties

This dialog box is used to:

- Add descriptions and keywords to a view.
- Set the duration.
- Select a media file to play with the model view.
- Set the paper size, margins and the dots per inch (DPI).

Copyright © Right Hemisphere 2007. All Rights Reserved.

Interface

Basic—Used to control basic settings for the model view.

- **Name**—The name of the model view.
- **Description**—A brief description of the model view.
- **Keywords**—Any keywords you want to associate with the model view.

Advanced—Used to control more advanced settings for the model view.

- **This steps' fly to duration**—The length of time it takes to generate the selected view in ms.
- **Background Top**—Selects the background gradient color to display at the top of the model view in the viewport window.
- **Background Bottom**—Selects the background gradient color to display at the bottom of the model view in the viewport window.
- **Reset Colors**—Restores the default background color.
- **Media to play**—Select a media file to play with the model view.
- **Delay**—The delay in ms. before playing the selected media file.

Output Size—Used to control output options for the model view.

- **Units**—The paper size measurement unit for the selected model view.
- **Output Size**
  - **Preset**—Select a size from the drop down list.
  - **Width**—Select a width for the paper in millimeters.
  - **Height**—Select a height for the paper in millimeters.
- **Orientation**
  - **Portrait**—Select to display the model view with a portrait orientation.
  - **Landscape**—Select to display the model view with a landscape orientation.
- **Margins (Millimeters)**
  - **Left**—Select a left margin width in millimeters.
  - **Right**—Select a right margin width in millimeters.
  - **Top**—Select a top margin width in millimeters.
  - **Bottom**—Select a bottom margin width in millimeters.
- **DPI**—Set the resolution for the paper in dots per inch, the higher the number the greater the resolution. Alternatively, select the pixel resolution:
  - **Width**
  - **Height**

OK—Closes the dialog. Any changes made to the settings are saved.

Cancel—Closes the dialog. Any changes made to the settings are lost.

Help—Opens the relevant Help topic.

Copyright © Right Hemisphere 2007. All Rights Reserved.

Object Position Controls

Menu bar > View > Controls and Toolbars > Object Position
Right-click menu bar > Controls and Toolbars > Object Position
Customize Layout dialog > Controls tab > Select Object Position > OK



The Object Position controls are linked to the 3D Editor toolbar (on page 364), and are used to transform (on page 93) (modify the position, rotation, and scale) individual and grouped objects along their individual axes interactively. That is, by typing in absolute coordinates to precisely transform objects. This can be helpful for more accurate animation control and alignment for precision training applications or simulations.

The controls can be resized, moved, floated, docked, and closed (on page 422) similar to the functionality in most Windows applications.

Note: If you move the scene cross section plane, its original position can be restored via the Scene right-click menu (on page 394).

Interface

X—The selected object's X axis.

Y—The selected object's Y axis.

Z—The selected object's Z axis.

Copyright © Right Hemisphere 2007. All Rights Reserved.

Scene Components Panel

our Menu bar > View > Controls and Toolbars > Scene Components
Right-click menu bar > Scene Components
Customize Layout dialog > Controls tab > Select Scene Components > OK

The Scene Components panel is displayed with 3D files and comprises a number of components; the navigation bar, the Scene tree, Materials list, Parts panel, Animation tree, Layers panel and Media folder. It is used to control file components from within a tree-view hierarchy. Every node, object, and material is indicated by a separate icon (on page 331).

You can display, hide, select, and edit scene components, edit component properties, draw callouts, edit callout and BOM source settings, and manage layers. You can also group objects and collapse object hierarchy. The navigation bar is used to display the different components, open the Select Objects dialog, and close the panel.

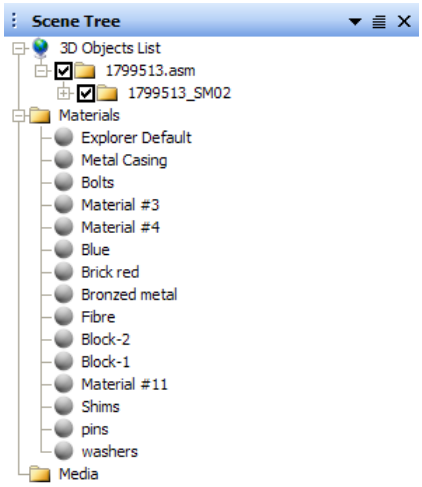

Scene Components panel: Scene tree

Windows hierarchy conventions apply to the panel. For example, if you select an object's parent check box, all child objects are also selected. However, pressing CTRL and selecting a parent check box, selects only that object.

The bar can be resized, moved, floated, docked, and closed (on page 422) similar to the functionality in most Windows applications. It also includes various context-sensitive right-click menus (on page 413) that relate to the area you are using.

Procedure

To display the panel's components:

1. Click the down arrow  in the panel.
2. Select one of the following:
   - **Scene Tree** to display the Scene tree.
   - **Materials** to display the Materials list.
   - **Parts** to display the Parts panel.
   - **Animation** to display the Animation tree.
   - **Layers** panel to display the Layers panel.

Copyright © Right Hemisphere 2007. All Rights Reserved.

Interface

Scene Tree (on page 332)—Comprises the 3D Objects list and the Materials folder.

- **3D Objects list**—Displays all objects within a scene.
- **Materials folder**—Displays all materials within a scene.
- **Media** folder—Displays audio files, images etc., associated with the scene.

Materials (on page 356)—Displays a list of all materials.

Parts—Displays a list of all parts.

Animation (on page 357)—Displays all animation objects in a tree-view hierarchy.

Layers (on page 357)—Displays the Layers panel.

Select Objects (on page 358)**,** —Opens the Select Objects dialog and is used to select multiple objects by name, size, polygon count, and vertex count.

Scene Component Panel Icons

Every node, object, and material displayed in the Scene Components panel (on page 329) is indicated by an icon.

Interface

 **3D Objects list node**

 **Group node**

 **Mesh object**

 **Bone object**

 **Camera object**

 **Light object**

 **Level of Detail object**

 **Target object**

 **Markup object**

 **Materials folder node**

 **Material with no map**

Copyright © Right Hemisphere 2007. All Rights Reserved.

 **Material with one map**

 **Material with multiple maps**

Scene Tree

Scene Components panel > Scene tree

The Scene tree comprises the 3D Objects list and the Materials folder. It can be used to select objects and materials within scenes. Scenes can be enhanced by modifying the scene, object, or material properties.

The tree's check boxes can be used to show and hide objects. They respect hierarchy if it is present; clearing the highest check box in a hierarchy clears all subordinate check boxes.

Note: You can also use the 3D viewport right-click menu (on page 390) to show and hide objects.

A number of properties can be set for 3D scenes, objects and materials using the dialog boxes. Additionally you can also search for and select objects using the Select Objects dialog.

Many of the tabs on these dialogs display a button in the lower left of the tab, which is used to copy all the information within the selected tab to the clipboard. You can copy information from various tabs including the Transformation, Materials, Geometry, Attributes, and Information tabs in the Object Properties dialog, and the Basic tab in the Material Properties dialog.

Many tabs also display Edit Keyframes buttons  beside certain properties. If you click one of these buttons, a timeline is displayed when you can create and modify keyframe animation (on page 109) for the selected property. Once you have modified animation for a particular property, the property field is displayed within a red line.

For example, if you edit animation on the Opacity field in the Attributes tab, a red line surrounds the field is shown in the image below.



Opacity field after editing keyframe animation

3D Objects List

The 3D Objects list presents, and is used to control all of a scene's objects and materials from within a tree-view hierarchy. The check boxes can be used to select, display, and hide the objects.

The right-click 3D Objects list menu (on page 414) can be used for object display and selection. This menu increases in importance as the complexity of the scene increases. You can also view and modify the properties of the scene and all its objects.

If markups exist in a scene, the markup objects are displayed in this list, from where they can be edited, hidden, and deleted.

Copyright © Right Hemisphere 2007. All Rights Reserved.

Materials Folder

The Materials folder presents, and is used to control the materials within a scene. A right-click context menu (on page 415) is also available from where you can control the materials.

Note: You can also view the scene's materials in the Materials list.

Procedures

To modify scene, object, and material properties:

1. Open the Scene Properties (on page 333), Object Properties (on page 335), or the Material Properties dialog (on page 350).
2. Make the selections you require.
3. Click **Apply** and then click **OK**.

To copy tab information to the clipboard:

1. Open the dialog from which you want to copy information.
2. Click the tab you require.
3. Click the Copy to Clipboard button .
4. Paste the information to the location you require.

Scene Properties Dialog

Scene tree > 3D Objects list > Double-click 3D Objects node
Scene tree > 3D Objects list > Right-click with no selection > Scene Properties
Right-click 3D viewport with no selection > Scene Properties

A number of properties can be set for 3D scenes including the ambient and illumination colors.

Note: You cannot save your changes in Deep View. That is, the changes are only effective for the current session.

Procedure

To open the Scene Properties dialog, do one of the following:

- Double-click the 3D Objects node in the 3D Objects list.
- Right-click in the 3D Objects list with nothing selected, and then click **Scene Properties**.
- Right-click in the 3D viewport with nothing selected, and then click **Scene Properties**.

Copyright © Right Hemisphere 2007. All Rights Reserved.

Environment Tab

Scene Properties dialog > Environment tab

The Environment tab is used to modify the global display settings including scene's environment attributes and the unit measurement.

Interface

Global ambient color—Opens the color selector and is used to select a color for the scene's ambient color.

Global illumination color—Opens the color selector and is used to select a color for the scene's illumination color.

Units—Used to select the unit type for which you want to view its custom unit (scene unit) measurement in meters. For example, 1 custom unit = 0.01 meters.

Custom unit—Displays the custom unit measurement for the selected unit type.

OK—Applies and saves the settings, and then closes the dialog.

Cancel—Closes the dialog. Any changes made to the settings are lost.

Summary Tab

Scene Properties dialog > Summary tab

The Summary tab is used to view a summary of all information relating to the scene's appearance including the number of meshes, textures, points, normals, and faces.

This information is automatically updated when you modify any associated object's or material's properties.

Advanced Tab

Scene Properties dialog > Advanced tab

The Advanced tab is used to modify the scene shadow, a number of global display settings, and the scene colors.

The scene color settings for various elements including the scene bounding box, scene axes, and vertices, are displayed via the Display menu (on page 257) and Display toolbar (on page 368). Changing the color of an element affects all file formats. Note that the color can only be changed for elements that have been enabled in the original images or model.

Note: The color settings can also be modified via the Options dialog (on page 280). They are unrelated to the Render modes (on page 70).

Please note that if you modify the bounding box, vertices, wire frame, object axes, and surface normals settings, you must select the related check boxes on the 3D View tab (on page 282) to apply your color settings.

Interface

Shadow—Used to modify the scene's shadow settings. Note that the objects in the scene must cast and/or receive shadows (on page 335) for these settings to be applied.

- **Image size**—Used to select the resolution of the shadow.
- **Blur radius**—Determines how much to blur the edges of the shadows.
- **Double-sided**—Displays the shadow as double-sided.
- **Opacity**—Determines the opacity of the shadows in the scene.

Copyright © Right Hemisphere 2007. All Rights Reserved.

Object Properties Dialog

3D Objects list/Parts panel > Right-click an object > Object Properties
Animation tree/Layers panel > Right-click an object > Object Properties
3D Objects list/Parts panel > Double-click object
Animation tree/Layers panel > Double-click object
Right-click selected object in 3D viewport > Object Properties
Double-click object in 3D viewport

A number of properties can be viewed and/or set for individual objects using the Object Properties dialog. The available tabs differ depending on the selected object. You can also open the Material Properties dialog (on page 350) for any materials associated with the object.

As these settings apply only to individual objects, you can apply a render method to objects that are separate from the render method applied to the entire scene. Note that you cannot modify 'parent' objects. That is, objects that contain sub-objects (child objects).

If you double-click a markup object or select to view properties of a markup object, the Edit Markup dialog is displayed from where you can edit the markup (on page 151).

You can also open the Material Properties dialog (on page 350) from within the Object Properties dialog for any materials that are associated with the object.

Note that where the Edit Keyframes button  is displayed beside an option, keyframe editing (on page 109) is available for the property.

Procedure

To open the Object Properties dialog, do one of the following:

- Double-click an object or a part in the 3D Objects list, Parts or Layers panel, or Animation tree, and then click **Object Properties**.
- Right-click an object or a part in the 33D Objects list, Parts or Layers panel, or Animation tree, and then click **Object Properties**.
- Open the Materials Properties dialog for a material associated with the object, click the Usage tab, select the object in the used objects list, and then click **Object Properties**.

Note: The Properties dialog for the cross section plane object can only be accessed by double-clicking the plane in the viewport.

Attributes Tab

Object Properties dialog > Attributes tab

The Attributes tab is used to edit the selected object's attributes including shadows, the render method, and the smoothing angle.

Note that this tab is disabled when multiple objects of a different type are selected. For example, a light object, a camera object, and a mesh object.

Note: Where the Edit Keyframes button  is displayed, keyframe editing (on page 109) is available for that property.

Copyright © Right Hemisphere 2007. All Rights Reserved.

Interface

Attributes—Used to establish the properties for the object's characteristics.

- **Cast shadows**—The selected object casts shadows (on page 334) on the other objects in the scene, if the other objects are set to receive shadows.
- **Receive shadows**—The selected object receives shadows that are cast by other objects in the scene, if the other objects are set to cast shadows.
- **Double-sided**—Applies the double-sided attribute to the selected object. Note that this this option disables back-facing culling.
- **Closed**—Prevents sub-objects of the selected group from being individually selected. That is, the entire object group is selected when you select any sub-object in the viewport.

  Note: This does not apply to selecting objects using the check boxes in the Scene Components panel (on page 329).

- **Selectable**—Allows you to select the object in the 3D viewport. Otherwise, you can only select it via the Scene Components panel.

Appearance—Used to establish the properties for the object's appearance.

- **Render method**—Used to select the render method of the object independently of the current scene rendering method. The render settings established using the Display Settings panel (on page 321) are used to display the object.
- **Render order**—Used to select the render order number for the scene. Objects with a 0 (zero) render order are rendered first and objects with a 10 (ten) render order are rendered last, lying over the top of earlier objects. This is designed to support sub-faces in the file format.
- **Opacity**—Determines the opacity of the object. Opacity is the opposite of transparency. As you reduce the opacity value, the object becomes more transparent.
- **Smoothing angle**—Determines the smoothing angle.
- **Local smoothing angle**—Applies the selected smoothing angle. This setting is local, that is, it changes the smoothing for the selected object and override any global smoothing settings (on page 261). This option does not affect raytracing results.

Comments—The comments that relate to the object.

Object Tab

Object Properties dialog > Object tab

The Object tab is used to view and edit the properties of the selected object.

Note that this tab is disabled when multiple objects are selected.

Interface

Object window—Displays the selected object and any modifiers that may have been applied to the object.

Item Information Window (on page 337)—Used to view and modify the properties for the object displayed in the object window.

Add—Adds an instance of the selected object to the object node.

Remove—Removes the selected object from the scene.

Properties—Opens another Properties dialog and is used to view any additional properties for the selected object. For example, the Bone tab is displayed for bone objects and the Light tab is displayed for light objects.

Copyright © Right Hemisphere 2007. All Rights Reserved.

Item Information Window

Object Properties dialog > Object tab > Item Information area

The Item Information window is used to view and modify the properties for selected objects. The options displayed differ depending on the selected object type. For example, camera, skin, bone, mesh, or light objects.

Many additional settings can be modified using various tabs that are specific to the selected object. For example, if you select a light object, you are able to modify additional settings using the Light tab.

Interface

Appearance (on page 337)

Bone (on page 341)

Camera (on page 341)

Light (on page 342)

Skin (on page 342)

Statistics (on page 343)

Appearance Information

Object Properties dialog > Object tab > Click primitive object > Item Information area
Object Properties dialog > Object tab > Click modifier object > Item Information area

The Appearance information is used to modify settings for the appearance of various objects such as primitives and modifiers. For example, if you apply a mirror modifier to an object, you can change the distance from the object's axis where the object is mirrored, and you can select to activate the mirror modifier in the scene.

The options that are displayed differ depending on the object type.

Interface

Archway Primitive (on page 182)—Used to modify the settings for the selected primitive.

- **DE Optimize**—Optimizes the object so that adjacent faces share vertices. For example, two triangles sharing an edge will share two vertices, reducing the total number of vertices for the two triangles from 6 to 4.
- **Generate UVs**—Creates a UV map for the object automatically.
- **2-sided**—Displays a face from both sides. The faces that make up the object are usually visible from one side only. This option is typically used when one or more faces are not displayed to ensure the object displays correctly. Selecting this option doubles the rendering time.
- **Flip sides—**Displays the inner faces, and hides the outer faces of the object. We recommend using this option instead of '2-sided' as it does not increase the rendering time.
- **Outer width—**Determines the absolute outer X-dimension.
- **Outer length—**Determines the absolute outer Y-dimension.
- **Thickness—**Determines the absolute thickness in the Z-direction. This can be modified by the tapers settings.
- **Wall thick 1—**Determines the thickness of the walls in the X-direction (measured on the straight sections) as a percentage of 'Outer width'.

Copyright © Right Hemisphere 2007. All Rights Reserved.

- **Wall thick 2—**Determines the thickness of the walls in the Y-direction (measured on the straight sections) as a percentage of 'Outer length'.
- **Bottom rad 1—**Determines the 'X-radius' of the two bottom inner arcs, as a percentage of 'Outer width'. The arcs can be elliptical, so, technically, it is the X-direction semi-axis of the ellipse. This option works in conjunction with the bottom inner arc parameters to define the shape and size of the bottom inner corner arcs.
- **Bottom rad 2—**Determines the 'Y-radius' of the two bottom inner arcs, as a percentage of 'Bottom rad 1'. For example, if you want circular arcs, set this to 100. Technically, it specifies the Y-direction semi-axis of the ellipse. If you want elliptical arcs that are taller than wide, use a value greater than 100. If you want an arc shorter than it is wide, use a value less than 100. This option works in conjunction with the bottom inner arc parameters to define the shape and size of the bottom inner corner arcs.
- **Bottom start ang**—Determines the start angle for the bottom inner arcs and is measured relative to an axis of the ellipse (or circle). For example, imagine walking the inner outline of the object counterclockwise. A value of 0 for 'Bottom start ang' makes the arc begin tangent to the vertical side that leads into it. Positive values bend inward, toward the inside of the object; negative values bend outward (if 'Keep angles in range' is not selected). This option works in tandem with the other bottom inner arc parameters to define the shape and size of the bottom corner arcs.

  Note: The 'start angle' is what is called an 'eccentric anomaly', which is useful in generating ellipses via a simple formula. For circular arcs, the two types of angle are identical. So, the start angle looks more accurate; for elliptical arcs, the start angle looks like it is in the proper direction, but that the value is 'somewhat off' (the more eccentric the ellipse, the greater the discrepancy). None of this should affect the process of visually adjusting the start angle until it 'looks right'. Start angle plus 'included angle' gives the 'end angle', which is also an eccentric anomaly, and subject to the same discrepancy. Again, it should not affect the process of adjusting the arcs until they 'look right'. Ninety percent of the time, you are going to want a start angle of 0, and an included angle of 90, to make the arcs' ends tangent to the straight sides to which they are connected, and the angle-discrepancy problem vanishes at those values, even for highly elliptical arcs.

- **Bottom incl ang**—Determines the included angle (or subtended angle) for the bottom inner arcs. It is the 'number of degrees the arc spans', beginning in the direction specified in 'Bottom start ang'. Usually, you want a positive number that is less than 90 minus 'Bottom start ang'. This option works in conjunction with the other bottom inner arc parameters to define the shape and size of the bottom inner corner arcs.

  Note: 'Keep angles in range' enforces this option.

- **Bottom outer square corners**—Squares the bottom outer corners. Otherwise, the bottom outer corners are rounded, outset from the inner ones by the amounts specified by the wall thicknesses.
- **Top rad 1**—Determines the 'X-radius' of the two top inner arcs, as a percentage of 'Outer width'. The arcs can be elliptical, so, technically, it is the X-direction semi-axis of the ellipse. This option works in conjunction with the top inner arc parameters to define the shape and size of the top inner corner arcs.
- **Top rad 2**—Determines the 'Y-radius' of the two top inner arcs, as a percentage of 'Top rad 1'. For example, if you want circular arcs, set this to 100. Technically, it specifies the Y-direction semi-axis of the ellipse. If you want elliptical arcs that are taller than wide, use a value greater than 100. If you want an arc shorter than it is wide, use a value less than 100. This option works in conjunction with the top inner arc parameters to define the shape and size of the top inner corner arcs.
- **Top start ang**—Determines the start angle for the top inner arcs and is measured relative to an axis of the ellipse (or circle). For example, imagine walking the inner outline of the object counterclockwise. A value of 0 for 'Top start ang' makes the arc begin tangent to the vertical side that leads into it. Positive values bend inward, toward the inside of the object; negative values bend outward (if 'Keep angles in range' is not selected). This option works in tandem with the other top inner arc parameters to define the shape and size of the top corner arcs.

Copyright © Right Hemisphere 2007. All Rights Reserved.

- **Top incl ang**—Determines the included angle (or subtended angle) for the top inner arcs. It is the 'number of degrees the arc spans', beginning in the direction specified in 'Top start ang'. Usually, you want a positive number that is less than 90 minus 'Top start ang'. This option works in conjunction with the other top inner arc parameters to define the shape and size of the top inner corner arcs.
- **Top outer square corners—**Squares the top outer corners. Otherwise, the top outer corners are rounded, outset from the inner ones by the amounts specified by the wall thickness.
- **Bottom incl ang**—Determines the included angle (or subtended angle) for the bottom inner arcs. It is the 'number of degrees the arc spans', beginning in the direction specified in 'Bottom start ang'. Usually, you want a positive number that is less than 90 minus 'Bottom start ang'. This option works in conjunction with the other bottom inner arc parameters to define the shape and size of the bottom inner corner arcs.

  Note: 'Keep angles in range' enforces this option.

- **Keep angles in range—**Restricts the angles for the inner corner Start and Included angles so that the corner arcs act as expected. For example, the olive green object in the image at the top of the page. The start angles are restricted to the range 0 to 90 degrees; included angles are restricted to the range 0 to 90 minus the start angle. This keeps the arcs from 'bowing outward'.
- **Bottom arc segs**—Determines the number of segments into which the object is subdivided along the bottom arcs, or in the bottom arc directions. This option refer to divisions around the perimeter.
- **Top arc segs**—Determines the number of segments into which the object is subdivided along the top arcs, or in the top arc directions. This option refer to divisions around the perimeter.
- **Vertical edge segs**—Determines the number of segments into which the object is subdivided along the vertical edges, or in the vertical edge directions. This option refer to divisions around the perimeter.
- **Horizontal edge segs**—Determines the number of segments into which the object is subdivided along the horizontal edges, or in the horizontal edges directions. This option refer to divisions around the perimeter.
- **Radial segs**—Determines the number of segments into which the object is subdivided along the radius, or in the radial directions. This option refer to the number of divisions radially outward from the center of the object.
- **Thickness segs**—Determines the number of segments into which the object is subdivided along the thickness, or in the thickness directions. This option refer to divisions around the perimeter.
- **Start percent**—Determines from where to start the frame to determine how much of the object to create. That is, you can create a partial object. It is measured from the base of the right straight section and counterclockwise for positive values around the perimeter.
- **Total percent**—Determines from where to start the frame to determine how much of the object to create. That is, you can create a partial object. It is measured counterclockwise for positive values around the perimeter. A value of 100 or greater (or -100 or less), the object is complete (closed), and has no end caps.
- **Back**—Displays the back face of the archway. We recommend using this option. Otherwise, you should select either the '2-sided' or 'Flip sides' option to ensure the object is displayed correctly.
- **Front**—Displays the front face of the archway. We recommend using this option. Otherwise, you should select either the '2-sided' or 'Flip sides' option to ensure the object is displayed correctly.
- **Outer**—Displays the outer faces of the archway. We recommend using this option. Otherwise, you should select either the '2-sided' or 'Flip sides' option to ensure the object is displayed correctly.

Copyright © Right Hemisphere 2007. All Rights Reserved.

- **Inner**—Displays the inner faces of the archway. We recommend using this option. Otherwise, you should select either the '2-sided' or 'Flip sides' option to ensure the object is displayed correctly.
- **Beg cap**—Displays the beginning cap face of the archway. We recommend using this option. Otherwise, you should select either the '2-sided' or 'Flip sides' option to ensure the object is displayed correctly.
- **End cap**—Displays the end cap face of the archway. We recommend using this option. Otherwise, you should select either the '2-sided' or 'Flip sides' option to ensure the object is displayed correctly.
- **Inner ang**—Determines the angle of rotation of the inner surface about its center. Typically, you should only use small values. If the angle is too large, the inner surface pops through the outer one, or faces become scrambled in other undesirable ways.
- **Inner taper**—Determines the thickness of the inner edges. It is an 'offset percentage' of the 'Thickness' option. For example, a value of zero has ne effect as the thickness is already set by the Thickness option. A value of 100 doubles the thickness, and -100 makes the thickness equal to zero (a sharp edge). Note that the thickness value must be greater than zero for this option to function.
- **Outer taper**—Determines the thickness of the outer edges. It is an 'offset percentage' of the 'Thickness' option. For example, a value of zero has ne effect as the thickness is already set by the Thickness option. A value of 100 doubles the thickness, and -100 makes the thickness equal to zero (a sharp edge). Note that the thickness value must be greater than zero for this option to function.
- **Inner 1-offset—**Determines the movement of the inner surface around the axes in the X direction as a percentage of the 'Outer width' or 'Outer length' options, whichever is larger. If the offset is too large, the inner surface pops through the outer one, or faces become scrambled in other undesirable ways.
- **Inner 2-offset—**Determines the movement of the inner surface around the axes in the Y direction. This value is a percentage of the 'Outer width' or 'Outer length' options, whichever is larger. If the offset is too large, the inner surface pops through the outer one, or faces become scrambled in other undesirable ways.
- **Inner 3-offset—**Determines the movement of the inner surface around the axes in Z direction. This value is a percentage of the 'Outer width' or 'Outer length' options, whichever is larger. If the offset is too large, the inner surface pops through the outer one, or faces become scrambled in other undesirable ways.

Character Primitive (on page 182)—Used to modify the settings for the selected character primitive.

- **Normal deviation** (on page 42)—Determines the maximum angular deviation (in degrees) allowed between a analytical surface and its triangulation. Pairs of triangles do not incorporate a dihedral angle greater than this amount. For example, this setting dictates the minimum number of facets around a smaller circle or cylinder regardless of the surface deviation (on page 42) setting. This parameter gives you added control over faces with very small radii. Lower values result in finer tessellations, while higher values give coarser tessellations.
- **Height**—Determines the height of the character.
- **Extrude**—Applies thickness to the character. Note that you cannot only see extrusion for 2D files by rotation. However, you can use the different preset views (on page 76) to see any extrusion you have applied.
- **Character**—Determines the character that is displayed in standard ASCII format http://www.lookuptables.com/. For example, a value of 50 displays '2', and a value of '100' displays 'd'.
- **Font**—The current font of the character.
- **Italic**—Displays the font in an italic style.
- **Bold**—Displays the font in an bold style.
- **Underline**—Displays the font in an underline style.

Copyright © Right Hemisphere 2007. All Rights Reserved.

Mirror Modifier (on page 182)—Used to modify the settings for the mirror modifier.

- **Modifier on**—Activates the selected modifier in the scene.
- **Modify normals**—Inverts the normals to match the originals.
- **Centre anchor**—A position, based on the center of the selected object, that is the central point about which the mirror is applied.
- **Destination**—The offset distance that is applied to one side of the mirror and not the other.
- **Direction**—The axis to mirror the objects. For example, you could mirror the objects along the X, XY, or XZ axes.
- **Offset**—Offsets the mirrored objects the distance of the selected axis. For example, imagine a mirror aligned with the plane created by the X and Y axes. Now imagine the object reflected in that mirror. If the offset is zero, the mirror passes straight through the origin of the object. If the offset is non-zero then the mirror is offset from the object, so the mirror image will also be offset from the original model.

Bone Information

Object Properties dialog > Object tab > Click bone object > Item Information area

The Bone information is used to modify settings for the selected bone object. Please see Bone tab (on page 344) for further information.

Camera Information

Object Properties dialog > Object tab > Click camera object > Item Information area

The Camera information is used to modify settings for the selected camera object. Note that additional settings can be modified using the Camera tab (on page 344).

Interface

Camera—Used to modify the settings for the selected light object.

- **Perspective**—Views the scene in perspective mode. Otherwise, the scene is viewed orthographically.
- **Zoom factor**—Applies the specified magnification to scene.
- **Field of view (FOV)**—Determines the angle of the field of view (FOV) to best fit a model in the scene. A low value displays a close up of the entire object, and a high value views the object from a greater distance.
- **FOV direction flyout**—Used to select the direction with which the FOV angle is applied to the viewport (render target).
  - **Minimum from width/height**—Calculates and applies the FOV based on either the viewport width or height, whatever dimension is the lesser.
  - **Maximum from width/height**—Calculates and applies the FOV based on either the viewport width or height, whatever dimension is the greater.
  - **Horizontally**—Calculates and applies the FOV based on the width of the viewport.
  - **Vertically**—Calculates and applies the FOV based on the height of the viewport.
- **Near clip-plane**—Determines the distance between the camera and the near clipping plane.
- **Far clip-plane**—Determines the distance between the camera and the far clipping plane.
- **Aspect Ratio**—This is the relationship between width and height, i.e. *aspect ratio* = *width/height*, it is used for ‘output size’ rendering.

Copyright © Right Hemisphere 2007. All Rights Reserved.

Local Coordinates—Used to modify the position of the camera relative to the local origin in the scene.

- **Origin**—Displays the coordinates of the origin of the frame of reference in the scene. Usually this is 0,0,0 unless the target point is location under a hierarchy.
- **Target**—Displays the coordinates of the target point that the camera is aiming at in the scene.
- **Up point**—Displays the coordinates of the camera's 'up point'. That is, the coordinates that forces the camera's view to be straight up. Camera's are defined by three things: an eye (or camera) location, a target location, and an up point. The cameras up point should almost always point straight up. For example, the coordinates 0,0,1 are a straight up point along the Z axis if the Z axis is straight up.

Light Information

Object Properties dialog > Object tab > Click light object > Item Information area

The Light information is used to modify settings for the selected light object. Note that additional settings can be modified using the Light tab (on page 347).

Interface

Light—Used to modify the settings for the selected light object.

- **Light type**—Displays the type of light that is selected. This is mapped from the many possible kinds of lights that can exist in the many supported formats and simplified to the model used in Deep Exploration.
- **Light color**—Used to open the color selector and select a color for the light.
- **Scale factor**—The intensity of light. For example, if a value of 2 is entered, the intensity is two times the light setting. If .5 is entered, the intensity is a half.
- **Inner radius**—The inner radius of the light beam.
- **Outer radius**—The outer radius of the light beam.
- **Inner Angle**—The inner angle of the light beam.
- **Outer Angle**—The outer angle of the light beam.
- **Attenuation**—Used to modify the attenuation settings for the object. Light attenuation is a vector of attenuation factors. 'Point' or 'spot' lights will light objects based on the distance from the object's vertices to the light's position based on certain formulas as described below.
  - **Attenuation**—Used to determine how the attenuated light is displayed.
    - **None**—Does not attenuate the light.
    - **Linear**—Displays light as a linear attenuation between two values.
    - **Exponential**—Displays attenuated light based on the formula 1 / (C + L*D + Q*D*D), where D=the distance from the vertex position to the light position, C=the attenuation constant factor, L=the attenuation linear factor, and Q=the attenuation quadratic factor.
  - **Constant**—The constant factor (C in the equation) used to calculate exponential attenuated light.
  - **Linear**—The linear factor (L in the equation) used to calculate exponential attenuated light.
  - **Quadratic**—The quadratic factor (Q in the equation) used to calculate exponential attenuated light.

Copyright © Right Hemisphere 2007. All Rights Reserved.

Skin Information

Object Properties dialog > Object tab > Click skin object > Item Information area

The Skin information displays information relating to the selected skin object.

Interface

Bones—Displays information relating to the bones that are connected to the selected skin object, and the number of vertices that are influenced by each bone.

Statistics Information

Object Properties dialog > Object tab > Click polygonal mesh object > Item Information area

The Statistics information displays information relating to the selected mesh. Additional mesh settings can be modified using the Geometry (on page 346) and UV (on page 348) tabs.

Interface

Polygonal Mesh—Displays information for the selected mesh object.

- **Number of points**—The number of vertices in the object.
- **Number of faces**—The number of faces in the object.
- **Texture points**—The number of texture vertices in the object.
- **Normal points**—The number of normal vertices in the object.

BREP Tab

Object Properties dialog > Object tab > Properties > BREP tab
Double-click the object in the object window > BREP tab

The BREP tab becomes available when you display the properties of an individual NURBS BREP object.

BREP objects consist of several NURBS surfaces and trimmed curves attached to each surface. These curves may cut any shape from the original rectangular surface. When all of these surfaces are connected together, any geometry object can be represented.

You can double-click any row in the BREP tab to display the a summary of the NURBS surface information.

Interface

Faces—Displays the parameters that determines the shape of the BREP's face.

- **Knots**—The number of knots used to join the pieces of each face. BREP knots are similar in nature to that of the knots used to join pieces of string. The knot values are expressed in the U and V directions.
- **Order**—The minimum number of control points required to define the shape of the face. The resulting face is equal to the sum of the effects from each control point. The order is expressed in the U and V directions.
- **Control Points**—Determines the profile of the face. The resulting face is equal to the sum of the effects from each control point. A control point is like a magnet and a BREP face is like a strip of thin ferrous metal. The magnets are placed a various distances away from the metal. The metal is distorted. These distortions are created by the different magnetic strengths due to the proximity of the magnets to the metal strip.

Copyright © Right Hemisphere 2007. All Rights Reserved.

- **Trim Curves**—The number of loops that define the boundaries of a trimmed curve. Loops are formed by trimming curves or boundary curves.

  Note: A surface has at least one loop. Higher numbers of loops are determined by the surface geometry. For example, if there is a hole in the surface, the surface will have two loops.

Mesh Properties (on page 346)—Displays the properties for the selected object's mesh.

Bone Tab

Object Properties dialog > Object tab > Properties> Bone tab
Double-click the object in the object window > Bone tab

The Bone tab is available when you display the properties of an individual object that includes bones. It displays all information relating to the bones in the selected object including the bone length, radius, and the objects and vertices affected by the bone.

Interface

- **Length**—The length of the bone when it is resting in scene units (on page 333).
- **Function**—The function used to calculate how the skin attached to the bone is to be moved based on the bone movement.
- **Minimum radius**—The minimum radius of the bone. That is, the narrowest part of the bone. This is only applied to bones with limited ranges.
- **Maximum radius**—The maximum radius of the bone. That is, the widest part of the bone. This is only applied to bones with limited ranges.
- **Weight map**—The weight map that is applied to the bone. The weight map dictates how the bone moves.
- **Strength**—The strength of the bone. This factor indicates how much the bone will affect the skin.
- **Unlimited**—Skin is affected by bone movement by ignoring points on the skin that are closer than the minimum radius, and affecting points on the skin that are further than the maximum radius. Otherwise, all points on the skin are affected by bone movement. The radius is the area around the bone within which mesh points are influenced by bone movement.
- **Weight map only**—Any deformations on the bones are solely based on the weight map and not the function.

Camera Tab

Object Properties dialog > Object tab > Properties > Camera tab
Double-click the object in the object window > Camera tab

The Camera tab is available when you display the properties of an individual camera object. It enables you to modify the camera object including changing the field of view (FOV), the way in which the FOV is applied to the scene, and the camera's target object.

Copyright © Right Hemisphere 2007. All Rights Reserved.

Field of View

For any viewport there are two field of views (FOVs) in effect; horizontal and vertical. For simplicity, you only need to specify one of these, and the other one is calculated based on the aspect ratio of the viewport. Note that it is only the ratio of width to height that is important; the actual size of the viewport is irrelevant. For example, if a camera is set to have a FOV of 30° applied horizontally, and the viewport is exactly square, the vertical FOV is also 30°.

By using the minimum from width/height value, the FOV is calculated and applied to either the viewport width or the height, whatever dimension is the lesser. Conversely, the maximum width/height value calculates and applies FOV to the viewport width or the height, whatever dimension is the greater. Therefore, if the 30° FOV is applied to the maximum from width/height, then 30° by 30° is the most that is ever seen of the scene.

If a scene is significantly longer in one direction than the other, and you want to capture the whole scene in one rendering, we recommend matching the FOV direction to the smallest dimension of the scene.

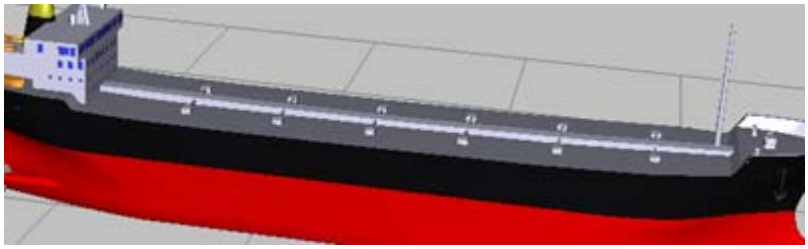

30° FOV applied horizontally on a wide model

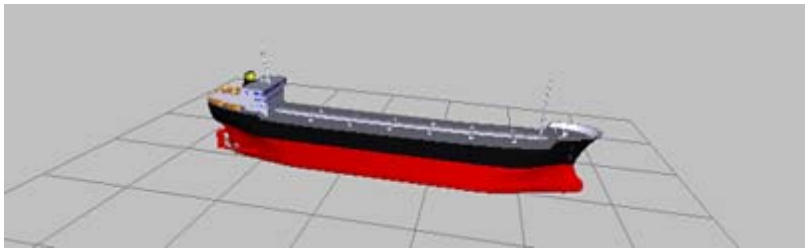

30° FOV applied vertically on a wide model

Clipping Plane

The clipping plane lets you exclude some of a scene's geometry to view or render only certain portions of the scene. Each camera has a near and a far clipping plane. Objects closer than the near clipping plane or further than the far clipping plane are invisible to the camera. Clipping planes are useful for rendering selected portions of a scene that have a lot of complex geometry. They can also help you create cutaway views. Clipping plane settings are part of the camera's creation parameters.

The location of each clipping plane is measured along the camera's line of sight (its local Z axis) in the current units for the scene.

By setting the distance between the camera and the camera clipping planes, you can select how far you can zoom in to and out from the model while still seeing the objects' details. For example, if you reduce the near clipping plane distance, you are able to zoom in much further to the model and see more detail. Conversely, if you reduce the far clipping plane distance, objects seem to disappear much more quickly as you zoom out from the model.

Note: Where the Edit Keyframes button  is displayed, keyframe editing (on page 109) is available for that property.

Copyright © Right Hemisphere 2007. All Rights Reserved.

Interface

Field of view (FOV)—Determines the angle of the field of view (FOV) to best fit a model in the scene. A low value displays a close up of the entire object, and a high value views the object from a greater distance.

FOV direction flyout—Used to select the direction with which the FOV angle is applied to the viewport (render target).

- **Minimum from width/height**—Calculates and applies the FOV based on either the viewport width or height, whatever dimension is the lesser.
- **Maximum from width/height**—Calculates and applies the FOV based on either the viewport width or height, whatever dimension is the greater.
- **Horizontally**—Calculates and applies the FOV based on the width of the viewport.
- **Vertically**—Calculates and applies the FOV based on the height of the viewport.

Target—Used to select the object on which the camera targets. If a target is used, you can turn the camera to focus on the target object and the object will always be centre of view. For example, if you create an auto fly-around.

Custom clip-plane—Enables the near and far cross section fields to determine the distance between the camera and the camera's clipping planes.

- **Near clip-plane**—Determines the distance between the camera and the near clipping plane.
- **Far clip-plane**—Determines the distance between the camera and the far clipping plane.

Activate—Displays the scene through the current camera.

Geometry Tab

Object Properties dialog > Object tab > Properties> Geometry tab
Double-click the object in the object window > Geometry tab

The Geometry tab displays the geometry values for the selected object from a list of display options including the vertex coordinates, color faces, and texture faces.

You can delete the geometry value arrays using the Delete button .

Interface

Items—Used to display values for the different types of geometry.

- **Array of vertex coordinates**—Displays the vertex coordinate values.
- **Array of faces**—Displays the face geometry values.
- **Array of smoothing groups**—Displays the geometry values for smoothing groups.
- **Array of texture coordinates**—Displays the texture coordinate values.
- **Array of normals faces**—Displays the geometry index values for normals faces.
- **Array of texture faces**—Displays the geometry values for texture faces.
- **Array of per vertex colors**—Displays the color values per vertex.
- **Array of color faces**—Displays the geometry values for color faces.
- **Array of per face materials**—Displays the material values per face.
- **Array of per faces flags**—Displays the flag values per face.
- **Per triangle bump tangents**—Displays the geometry values per triangle bump tangents.

Delete—Deletes the selected array of values.

Copyright © Right Hemisphere 2007. All Rights Reserved.

Light Tab

Object Properties dialog > Object tab > Properties> Light tab
Double-click the object in the object window > Light tab

The Light tab is available when you display the properties of an individual light object. It enables you to modify the light object including the light's color, intensity, and shadow.

Interface

Color—Used to open the color selector and select a color for the light.

Intensity—Determines the intensity of the light.

Shadow—Casts a shadow from the scene's objects on raytrace renders.

NURBS Curve Tab

Object Properties dialog > Object tab > Properties > NURBS Curve tab
Double-click the object in the object window > NURBS Curve tab

The NURBS Curve tab becomes available when you display the properties of an individual NURBS curve object.

Interface

NURBS Curve Window—Displays the parameters that determine the shape of the NURBS curve.

Mesh Properties (on page 346)—Displays the properties for the selected object's mesh.

NURBS Surface Tab

Object Properties dialog > Object tab > Properties > NURBS Surface tab
Double-click the object in the object window > NURBS Surface tab

The NURBS Surface tab becomes available when you display the properties of an individual NURBS surface object.

Interface

NURBS Surface Window—Displays the parameters that determine the shape of the NURBS surface.

Mesh Properties (on page 346)—Displays the properties for the selected object's mesh.

Copyright © Right Hemisphere 2007. All Rights Reserved.

UV Tab

Object Properties dialog > Object tab > Properties> UV tab
Double-click the object in the object window > UV tab

The UV tab becomes available when you display the properties of an individual object that includes UVs. It enables you to display the UVs for the scene's texture maps, and to zoom the map within the tab display.

Interface

Texture map—Used to select a texture map to display.

 **Pan** (on page 64)—Moves the texture map in the tab display.

 **Scale** (on page 66)—Magnifies and reduces the magnification of the texture map.

 **Zoom Window** (on page 67)—Magnifies the selected area in the texture map.

 **Zoom In** (on page 67)—Magnifies the selected texture map.

 **Zoom Out** (on page 67)—Reduces the magnification of the selected texture map.

 **Best Fit** (on page 67)—Displays the texture map as it fits best in the tab display.



Standard View (on page 67)—Displays the texture map at its actual size within the tab display.

Color—Opens the color selector and is used to select the color to display the wireframes in the tab display.

Information Tab

Object Properties dialog > Information tab

The Information tab is used to view a summary of the information relating to the object's appearance including the number of vertices and faces, any texture coordinates, the parent object name (if any), and any animation values.

The information is automatically updated when you modify the properties of either the object or any associated material.

Interface

OK—Closes the dialog.

Cancel—Closes the dialog.

Help—Opens the relevant Help topic.

Copyright © Right Hemisphere 2007. All Rights Reserved.

Materials Tab

Object Properties dialog > Materials tab

The Materials tab displays the numbers, names, textures, and faces of the materials assigned to the selected object. It can also be used to access the Material Properties dialog where you can view and modify the selected material's properties.

Procedure

To open the Material Properties dialog from the Materials tab:

Click the **Material properties** link on the Materials tab.

Interface

Material Properties (on page 350)—Opens the Materials Properties dialog and is used to modify the selected material's properties.

Number—Displays the system generated numbers of the materials used by the object.

Name—Displays the names of the materials used by the object.

Texture—Displays the texture files of the materials used by the object.

Faces—Displays the number of faces of the materials used by the object.

Transformation Tab

Object Properties dialog > Transformation tab
Cross Section Properties dialog > Transformation tab

The Transformation tab displays the selected 3D objects geometry and transformation information including the transform values (position, rotation, scale, and shear) of the selected objects along the axes. These are displayed encoded in a matrix and are relative to the world coordinate system (on page 80) by default.

An object's 'extents' are its maximum dimensions in X, Y, and Z. These are the dimensions of the rectangular bounding box that surrounds the object in local object coordinate system.

The selected object's name can be edited using this tab; if you select multiple objects and edit the name, the names of all selected object's are changed.

Note: Where the Edit Keyframes button  is displayed, keyframe editing (on page 109) is available for that property.

Interface

Name—Used to edit the object's name.

Color—Sets the color for the object's wireframe when the scene is displayed in Wireframe render mode. (on page 70)

Position—The position of the object along the X, Y, and Z axes. The values are relative to the parent coordinate system if it is a child object and the 'Relative to parent coordinate system' check box is selected.

Rotation—The object's rotation about the X, Y, and Z axes. The values are relative to the parent coordinate system if it is a child object and the 'Relative to parent coordinate system' check box is selected.

Copyright © Right Hemisphere 2007. All Rights Reserved.

Scale—The object's scale along the X, Y, and Z axes. The values are relative to the parent coordinate system if it is a child object and the 'Relative to parent coordinate system' check box is selected.

Shear—The object's shear along the X, Y, and Z axes relative. The values are relative to the parent coordinate system if it is a child object and the 'Relative to parent coordinate system' check box is selected.

Transform matrix—The transform values of the selected object. The values are relative to the parent coordinate system if it is a child object and the 'Relative to parent coordinate system' check box is selected.

Relative to parent coordinate system—The position, rotation, scale, shear, and transform matrix values relative to the parent coordinate system.

Dimension—The object's dimensions along the X, Y, and Z axes.

Roll—The angle of roll for the selected camera. *This field is only available for camera objects*.

Billboard—This is used to adjust a node's transform dynamically, based on the camera position, and has the following modes:

- **View** — Keeps local Y pointing UP and X pointing RIGHT (relative to the viewer)
- **Y-Axis** — Allow node to rotate around local Y to keep Z pointing toward viewer (good for trees)
- **X-Axis** — Allow node to rotate around local X to keep Z pointing toward viewer (good for arrows with text)
- **Y-Flip** — Allow node to flip around local Y to keep Z pointing toward viewer
- **X-Flip** — Allow node to flip around local X to keep Z pointing toward viewer
- **Custom** — Uses axes set internally, by default same as Y-Axis mode

Material Properties Dialog

Scene Components panel > Materials folder > Double-click material
Scene Components panel > Materials folder > Right-click a material > Material Properties
Scene Components panel > Materials list > Double-click material
Scene Components panel > Materials list > Right-click a material > Material Properties

You can view and modify material properties using the Material Properties dialog. Material properties describe how polygons reflect light, or appear to emit light, in a 3D scene. Essentially, a material is a set of properties that provide various information about the polygons being rendered including:

- How they reflect ambient and diffuse light.
- What their specular highlights look like.
- Whether the polygons appear to emit light.

Material properties detail a material's diffuse reflection, ambient reflection, light emission, specular highlight characteristics, glossiness etc. Material properties affect the colors that are used. With the exception of the specular property, each property is described as an RGBA color that represents how much of the red, green, and blue parts of a given type of light it reflects, and an alpha blending factor - the alpha component of the RGBA color.

Where the Edit Keyframes  button is displayed beside an option, keyframe editing (on page 109) is available for the property.

Note: You can also open the Object Properties dialog (on page 335) from within the Material Properties dialog for any materials that are associated with the object.

Copyright © Right Hemisphere 2007. All Rights Reserved.

Procedure

To open the Material Properties dialog, do one of the following:

- Double-click a material in the Materials folder or Materials list, and click **Material Properties**.
- Right-click a material in the Materials folder or Materials list, and click **Material Properties**.
- Open the Object Properties dialog for an object that is associated with the material, click the Materials tab, select the material in the used materials list, and then click **Material Properties**.

Basic Tab

Material Properties dialog > Basic tab

The Basic tab is used to adjust the appearance of the material including the ambient light, opacity across all channels, and shading. Note that 'alpha' for a specific channel (ambient, diffuse, specular, etc) is controlled by using an RGBA map (texture map, bitmap, etc) for that channel via the **Maps** tab.

Interface

Name—The name of the currently selected material.

Ambient—Used to select the ambient light color. Ambient light is the light that illuminates the entire scene. It has uniform intensity and is uniformly diffuse. It has no discernible source and no discernible direction. Ambient light has a lesser impact on the apparent color than diffuse light color, but it does affect the overall color and is most noticeable when little or no diffuse light reflects off the material.

Diffuse—Used to select the diffuse light color. Diffuse color describes how a material reflects diffuse light in a scene. Because most scenes contain much more diffuse light than ambient light, diffuse reflection plays the largest part in determining overall color. Additionally, because diffuse light is directional, the angle of incidence for diffuse light affects the overall intensity of the reflection. Diffuse reflection is greatest when the light strikes a vertex parallel to that vertex normal. As the angle of reflection increases, the effect of diffuse reflection diminishes. The amount of light reflected is the cosine of the angle between the incoming light and the vertex normal.

Specular—Used to select the specular light (reflection) color. Specular reflection creates highlights on objects making them appear shiny. By setting this color, you establish the color of the highlights.

Emissive—Used to select the 'glow' light color. This can be useful for displaying pre-lit models (where the light energy of the room is computed explicitly), or for displaying scientific data.

Opacity—Determines the opacity of the material. Opacity is the opposite of transparency. As you reduce the opacity value, the object becomes more transparent.

Shading—The Shaders drop down menu displays all the sample shader files that are delivered with the application and any additional shaders that may have been saved.

Glossiness—Determines the model's highlighting. As you increase the glossiness, the highlight gets smaller and the material appears shinier.

Specular level—Determines the intensity of the specular light. You can set the specular level to a very high value to achieve very strong, tight highlights. This value is also known as 'shininess strength'.

Raytrace reflection—Determines the material's ability to reflect.

Index of refraction—Determines how much light is bent when travelling through a substance such as glass. The lower the number, the less the light is bent.

Copyright © Right Hemisphere 2007. All Rights Reserved.

Double-sided—Applies the double-sided attribute to the selected material. Note that this option disables back-facing culling.

Render outlines—Used to render the thickness of outlines relative to the selected number.

OK—Applies and saves the settings, and then closes the dialog.

Cancel—Closes the dialog. Any changes made to the settings are lost.

Help—Opens the relevant Help topic.

Maps Tab

Material Properties dialog > Maps tab

Maps define the qualities that comprise a given material. The Maps tab displays all available texture maps for the selected material. It enables you to perform a number of procedures including selecting, modifying, and saving textures maps, removing textures from maps, opacity across individual channels, and applying texture blending.

If you click a map icon for a map that has a texture, the texture is displayed. You can also display information relating to the selected map including its location, size, and number of materials to which it is associated as shown in the example below.

Note that opacity can be applied across all channels (ambient, diffuse, specular, etc) via the Basic tab.

Procedure

To display map information:

Click the map icon for which you want to display information and then click the Information  button.

Interface

 **Save As**—Saves the selected texture to a location and in the format of your choice.

 **Copy Image**—Copies the selected texture to the clipboard.

 **Information**—Displays information relating to the selected texture.

 **Zoom In**—Magnifies the selected texture map.

 **Zoom Out**—Reduces the magnification of the selected texture map.

Amount—Determines the texture map's strength. For example, the opacity of the Diffuse map or the 'bumpiness' of the Bump map.

Offset U—Determines the texture map's position on the surface along the U offset coordinate.

Offset V—Determines the texture map's position on the surface along the V offset coordinate.

Scale U—Determines the texture map's size along the U coordinate.

Scale V—Determines the texture map's size along the V coordinate.

Copyright © Right Hemisphere 2007. All Rights Reserved.

Angle—Determines the texture map's angle of rotation on the surface.

U Tile—Tiles the texture map along the U coordinate.

V Tile—Tiles the texture map along the V coordinate.

More Properties (on page 353)—Opens the Additional Map Properties dialog and is used to modify various, additional map properties for the selected map.

Texture field—The image used as the texture for the selected map.

Browse—Used to browse for and select an image to use as a texture.

Remove—Removes the selected texture from the map.

OK—Applies and saves the settings, and then closes the dialog.

Cancel—Closes the dialog. Any changes made to the settings are lost.

Apply—Applies the settings.

Help—Opens the relevant Help topic.

Additional Map Properties Dialog

Material Properties dialog > Maps tab > More Properties

The Additional Map Properties dialog is used to modify further properties of the selected map.

Interface

3ds Max UV tiling—Uses 3ds Max's offset values; positive U is to the right, positive V is up. 3ds Max uses offset values that are pre-scaled. That is, they not multiplied by the tiling value.

Texture blending—Used to select the way in which texture map is blended with the base material.

- Modulate—Blends the texture and the base material together. Where the texture displays white, the color of the material is displayed. Where the texture displays black, the color of the texture is displayed. Where the texture displays gray, the texture and material colors are mixed together. For example, if the texture is gray and the material is red, a dark red color is displayed.
- Replace—Display the color of the texture only.

Map channel—Determines the UV channel to which the current material is assigned. This is helpful when materials have been assigned to UV channels via external applications.

Invert—Substitutes black with white and vice versa.

Use as color map—If the texture if colored, colors are displayed. Otherwise, the texture is displayed in grayscale. This option only applies to the diffuse map.

Treat as normal map—Treats the texture as if it is originally a normal map without any conversion taking place. Otherwise, the texture is converted to a normal map. This option only applies to the bump map.

Internal texture format—Used to select the pixel format (color depth) to apply to the texture. That is, the number of colors used to draw the scene. The format is in bits.

OK—Closes the dialog and saves the settings.

Cancel—Closes the dialog. Any changes made to the settings are lost.

Help—Opens the relevant Help topic.

Copyright © Right Hemisphere 2007. All Rights Reserved.

Usage Tab

Material Properties dialog > Usage tab

The Usage tab displays the numbers, names, and faces of the objects to which the selected material is associated. It can also be used to access the Object Properties dialog where you can view and modify the selected object's properties.

Procedure

To open the Object Properties dialog from the Usage tab:

Click the **Object properties** link on the Usage tab.

Interface

Object Properties (on page 335)—Opens the Object Properties dialog and is used to modify the selected objects' properties.

Number—Displays the system generated numbers of the objects used by the material.

Name—Displays the names of the objects used by the material.

Faces—Displays the number of faces of the objects used by the material.

OK—Closes the dialog.

Cancel—Closes the dialog.

Help—Opens the relevant Help topic.

Line Styles Tab

Material Properties dialog > Line Styles tab

The Line Styles tab is used to control the properties of any line styles associated with a material, for polylines, illustrations and wireframes. For example, you can specify the thickness of a line, whether it is a dashed or solid line, and whether the line ends are rounded.

Where the Edit Keyframes  button is displayed beside an option, keyframe editing (on page 109) is available for the property.

Interface

Polylines—Used as a style guide for the display of polylines associated with a material. These settings are valid for polylines in mesh objects and all render modes.

- **Line Width**—Used to set the thickness of the line.
- **Units**—Determines the way in which the linestyle is measured. Units are either measured in 2D or 3D.
  - **3D, Object Space**—Measure the lines by using object units. The lines remain constant as the camera moves around, and you can see perspective on these lines.
  - **3D, World Space**—Measure the lines by using world units. The lines remain constant as the camera moves around, and you can see perspective on these lines.
  - **2D, View Space**—Measure the lines in units. Moving the camera does not alter the absolute length of the line. For example, if the dashes in a dashed line pattern are 20 pixels long on screen, they will always be 20 pixels long.

Copyright © Right Hemisphere 2007. All Rights Reserved.

  - **2D, Pixels**—Measure the lines by using pixels.
- **Halo**—Used to draw polylines on top of a thicker solid line using the background color. This means that as the line width changes, the halo scales accordingly.The halo value is a numeric value where 0.0 = no halo and 1.0 = white borders the same width as the line.

Note: this is a specialized attribute that is used for drawings and callouts.

- **Color**—Used to determine the color of the polylines.
- **Butt**—The lines ends 'butt' up against each other.
- **Round**—The line ends are rounded.
- **Dash pattern**—Used to denote the appearance of the line. That is, whether it is a solid or dashed line. This is left empty to produce a solid line, or a comma separated list of numbers to produce a dashed line.

Illustration Mode—Used as a style guide for line drawing display in Illustration mode.

Note: These settings only show in Illustration mode.

- **Units**—Determines the way in which the linestyle is measured. Units are measured in 2D.
  - **2D, View Space**—Measure the lines in units. Moving the camera does not alter the absolute length of the line.
  - **2D, Pixels**—Measure the lines by using pixels.
- **Line Width**—Used to set the thickness of the line.
- **Silhouette**—Used to create a thicker line relating to the external lines.

Wireframe Mode—Used as a style guide for line drawing display in Wireframe mode.

Note: These settings only show in Wireframe mode.

- **Units**—Determines the way in which the linestyle is measured. Units are measured in 2D.
  - **2D, View Space**—Measure the lines in units. Moving the camera does not alter the absolute length of the line.
  - **2D, Pixels**—Measure the lines by using pixels.
- **Wireframe**—Used to set the thickness of the wireframe.

OK—Applies and saves the settings, and then closes the dialog.

Cancel—Closes the dialog. Any changes made to the settings are lost.

Help—Opens the relevant Help topic.

Information Tab

Material Properties dialog > Information tab

The Information tab is used to view a summary of all information relating to the material's appearance including the lighting, texture mapping parameters, and texture file names.

The information is automatically updated when you modify the properties of either the material or any associated object.

Interface

OK—Closes the dialog.

Cancel—Closes the dialog.

Help—Opens the relevant Help topic.

Copyright © Right Hemisphere 2007. All Rights Reserved.

Materials List

Scene Components panel > Materials

The Materials list displays a thumbnail list of all the materials that are associated with the current 3D file to allow easy identification of materials. It can be used to view materials, add materials to objects and maps, create, duplicate, delete, and rename materials, select materials and their associated objects, and modify the material and map properties.

You can view the number textures that have been applied to each material, the maps to which those textures have been applied, if the opacity had been modified, and if the UV offsets have been modified.

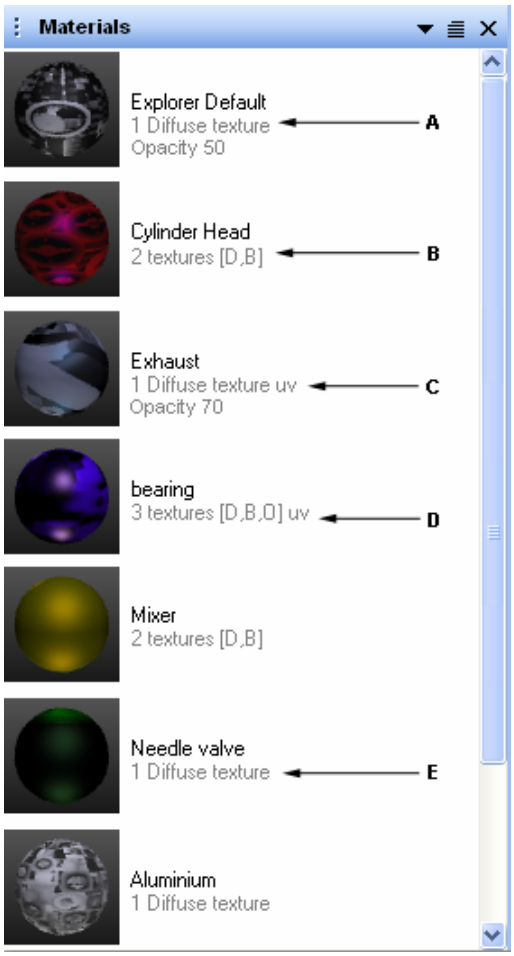

A: 1 texture (diffuse map), opacity 50%
B: 2 textures (diffuse and bump maps)
C: 1 texture (diffuse map), UV modification, opacity 70%
D: 3 textures (diffuse, bump, opacity maps), UV modification
E: 1 texture (diffuse map)

A right-click menu (on page 415) is available from where you can perform various material functions and keyboard shortcuts (on page 438) are available for the display of materials.

See Materials (on page 106) for further information and procedures.

Copyright © Right Hemisphere 2007. All Rights Reserved.

Parts Panel

Scene Components panel > Parts

The Parts panel presents, and is used to control, all the objects that are associated with the current 3D file. You can also draw callouts, export the Bill of Materials (BOM list) and modify the callout and BOM source settings.

A right-click menu (on page 417) is available from where you can perform a number of object-type functions including displaying and selecting objects, renaming callouts, and modifying the properties of the selected object.

The Parts panel displays all duplicated objects (on page 99) and the number of times that they are used in the scene. However, it displays only the objects that are part of the selected BOM source.



Parts panel toolbar

Interface

 **Draw Callouts (on page 135)**

 **Manual Callouts and BOM** (on page 146)

 **Callout Settings (on page 138)**

 **Action (on page 140)**

 **Remove Callouts** (on page 135)

 **Export BOM (on page 135)**

 **Select Only Callout**—This toggles between selecting the callout only and the callout and associated object, icon changes to **Select Callout and Object**, .

 **BOM Source (on page 143)**

Animation Tree

Scene Components panel > Animation

The Animation tree displays a list of all the components that are associated with any animation in the current 3D file. A right-click context menu (on page 417) is also available from where you can perform a number of functions relating to animation.

Layers Panel

Scene Components panel > Layers

The Layers panel is used to create new layers and modify how the layers are displayed. Right-click menus (on page 418) are also available from where you can control the layers including locking, deleting and renaming layers.

Copyright © Right Hemisphere 2007. All Rights Reserved.

Interface

 **Create** (on page 169)—Creates a new layer. Any objects that are selected when this layer is created, are immediately added to the layer.

 **Unique** (on page 169)—Displays only the objects assigned to the selected layer. Objects that are not assigned to the layer are hidden.

Select Objects Dialog

Scene Components panel > Select Objects button
Click in viewport with no selection > Keyboard F3

Multiple objects can be selected (on page 88) by name, size, polygon count, and vertex count using the Select Objects dialog.

The dialog comprises tabs and selection tools used to select objects automatically, and a list that displays all the objects of the current scene. This list can be used to manually select objects.

Note: You can also use the Edit Menu (on page 254) to open the Select Objects dialog.

Procedure

To open the Select Objects dialog, do one of the following:

- Click **Select Objects**  on the Scene Components tab.
- Click in the viewport, and with no selection press **F3**.

Interface

Name—Used to select objects by name.

- **Search for**—Selects objects using the letter/s contained in their names.
- **Case-sensitive**—Selects objects by name using upper and lowercase characters.

Size—Used to select objects by their size within their bounding box.

- **Level**—Selects objects by size from smallest to largest.
- **Invert selection**—Inverts the current selection.

Polygon Count—Used to select objects by the number of object faces.

- **Level**—Selects objects by the number of faces from least to most.
- **Invert selection**—Inverts the current selection.

Vertex Count—Used to select objects by the number of object vertices.

- **Level**—Selects objects by the number of vertices from least to most.
- **Invert selection**—Inverts the current selection.

Close—Closes the dialog.

Help—Opens the relevant Help topic.

Copyright © Right Hemisphere 2007. All Rights Reserved.

Steps Panel

Menu bar > View > Controls and Toolbars > Steps
Right-click menu bar > Steps
Customize Layout dialog > Controls tab > Select Steps > OK

The Steps panel presents, and is used to control all user-defined steps; you can create and delete steps, and modify their properties.

The panel can be resized, moved, floated, docked, and closed (on page 422) similar to the functionality in most Windows applications. The options displayed on the panel differ depending on the selected render mode.

A right-click menu (on page 420) is available from where you can activate the views and edit their names. It also includes a toolbar that can be used to select, save, and delete themes.



Steps panel toolbar

Procedure

To toggle the display of the Steps panel, do one of the following:

- Choose **View > Controls and Toolbars > Steps** on the menu bar.
- Right-click the menu bar and click **Steps**.
- Open the Customize Layout dialog, select or clear the Steps check box in the Controls tab, and then click **OK**.

Interface

 **Create** (on page 194)—Creates a step based on the current camera, render mode, and selected objects.

 **Delete** (on page 194)—Deletes the selected step.

 **Options** (on page 360)—Opens the Step Options dialog and is used to modify the global step settings.

 **Thumbnails**—Displays a thumbnail view with the name of each file.

 **Reset** (on page 194)—The step that is currently active is reset to its saved position (first frame).

 **Play** (on page 194)—Plays the step forward.

 **Stop** (on page 194)—Stops the step from playing.

Copyright © Right Hemisphere 2007. All Rights Reserved.

Step Options Dialog

Steps panel > Step Options

The Step Options dialog is used to modify the global step settings. That is, they are applied to all steps when steps are created.

Interface

Activation—Used to establish how the sequences link together when the step is played.

- **Enable fly-to camera**—Allows the camera to fly between each sequence.
- **Duration**—Determines the duration in seconds of the step.

Playback Control—Used to select the percentage playback speed.

- **Speed**—Determines the percentage playback speed, that is, the speed the step plays as a percentage of real-time speed. For example, if the step is 10 seconds long and you enter 100%, it will take 10 seconds to play. However, if you enter 50%, the step will take 20 seconds to play.

OK—Closes the dialog. Any changes made to the settings are saved.

Cancel—Closes the dialog. Any changes made to the settings are lost.

Help—Opens the relevant Help topic.

Create Step Dialog

Steps panel > Create Step

The Create Step dialog is used to create steps including selecting and ordering the steps' sequences.

Interface

Name—Used to edit the step's name.

Description—Used to edit the step's description.

Available sequences—Lists all the available sequences within the file that can be added to the step.

Current sequences—Lists the sequences that are currently stored as part of the step.

Add—Adds the selected sequence to the step.

Remove—Removes the selected sequence from the step.

Up—Moves the selected sequence up one level in the sequence list.

Down—Moves the selected sequence down one level in the sequence list.

OK—Closes the dialog and creates the step.

Cancel—Closes the dialog without creating a step.

Help—Opens the relevant Help topic.

Copyright © Right Hemisphere 2007. All Rights Reserved.

Step Properties Dialog

Steps panel > Right-click step > Step Properties

The Step Properties dialog is used to modify step properties including the step names and descriptions. It is also used to add to, and remove from the step, any animation sequence that is part of the current file.

Interface

Name—Used to edit the step's name.

Description—Used to edit the step's description. You can add metadata tags, a metadata keyword, and metadata content to this description, which can be used to display the step's description and metadata content (on page 196) in PDF documents using the PDF Publishing Module (on page 223).

Available sequences—Lists all the available sequences within the file that can be added to the step.

Current sequences—Lists the sequences that are currently stored as part of the step.

Add—Adds the selected sequence to the step.

Remove—Removes the selected sequence from the step.

Up—Moves the selected sequence up one level in the sequence list.

Down—Moves the selected sequence down one level in the sequence list.

OK—Closes the dialog. Any changes made to the settings are saved.

Cancel—Closes the dialog. Any changes made to the settings are lost.

Help—Opens the relevant Help topic.

Copyright © Right Hemisphere 2007. All Rights Reserved.

Video Controls

Open video file

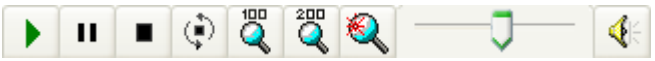

When you open a video file (on page 114), video controls are displayed beneath the viewport. These allow you to play, pause, stop, repeat, and mute the video. You can also zoom the video display, and raise and lower the volume.

See also Appendix D: Video File Formats (on page 545).

Interface

 **Play—**Plays the video forward.

 **Pause**—Pauses the video from playing.

 **Stop**—Stops the video from playing.

 **Repeat**—Sets the video to play continuously from beginning to end.

 **No Repeat**—Stops the video from playing continuously from beginning to end.

 **100% Zoom**—Displays the video at it's actual size in the viewport.

 **200% Zoom**—Displays the video at 200% magnification in the viewport.

 **Fit to Window**—Displays the video at it's best fit in the viewport.

Volume slider—Determines the level at which to play the video's sound.

 **Mute**—Mutes the sound while the video continues to play.

Frame slider—Determines the particular moment in the video to which to move.

Copyright © Right Hemisphere 2007. All Rights Reserved.

Toolbars

Menu bar > View > Controls and Toolbars
Right-click menu bar
Customize Layout dialog > Controls and Toolbars tab

Toolbars are sets of buttons to access the tools relating to standard and module (on page 13) functionality. They can be resized, moved, floated, docked, and closed (on page 422) similar to the functionality in most Windows applications. They are displayed as docked by default and have a Windows-type interface. Individual toolbars can be shown or hidden.

You can set each toolbar to display automatically (on page 422) if a file includes functionality that relates to that toolbar.

Note: Certain toolbars are only available if the related module (on page 13) is installed on your computer.

Interface

2D Editor—Used to select the color channels for 2D images.

3D Editor (on page 364)**—**Used to modify objects of the current scene, edit animation, and move markups.

CADTools (on page 366)—Used to perform a variety of actions including inverting faces, removing small parts, and exploding objects.

Cutting (on page 367)—Used to perform a number of actions relating to polygon cutting.

Display (on page 368)—Used to select render modes with which to view files, and to show certain scene elements such as the scene bounding box and lights and cameras.

Illustration (on page 372)—Used to render images in either raster or vector form, including markups and callouts.

Lights (on page 372)—Used to apply lighting to the current scene.

Measurements (on page 373)—Used to measure the distance or angle between two elements in a scene, or within a single element.

Mesh Select (on page 374)—Used to select meshes, faces, points and polylines.

Navigation (on page 374)—Used to view scenes from various angles and scales.

PMI (on page 375)—Used to manage PMI markups, and establish the default PMI markup settings

Realight (on page 184)—Used to simulate global illumination utilizing the ambient occlusion technique.

Rendering (on page 378)—Used to select a renderer, set the renderer properties, and to specify the destination to which to render or save the 2D file.

Solid tools (on page 379)—Used to control solid tessellation.

Standard (on page 380)—Used to manage files, create slide shows, and to change the Explorer bar view.

Surfaces (on page 381)—Used to select and display surfaces for the scene.

Drawing and Markup (on page 369)—Used to markup 2D images and 3D models.

Thrustlines (on page 381)—Used to create and control the appearance of thrustlines.

UV Mapping (on page 198)—Used to apply UV mapping coordinates to selected objects and to pack the UV coordinates.

Copyright © Right Hemisphere 2007. All Rights Reserved.

2D Editor Toolbar

Menu bar > View > Controls and Toolbars > 2D Editor
Right-click menu bar > 2D Editor
Customize Layout dialog > Select 2D Editor check box > Apply



The 2D Editor toolbar is used to display and hide the color channels. This is helpful when you want to remove certain parts of an image. The red, green, and blue channels are always active by default. The Alpha Channel button only becomes active if an alpha channel (on page 276) is present within the file.

All images also have three channels: one red, one green, and one blue. Each channel is a representation of the image in a single hue. The pixels in the red channel are all some value of red between 0.0 (no red) and 1.0 (full red). The image you see when you import a graphic is the combination of the three channels into one color composite.

While RGB values represent color, the alpha channel is an additional part of the image that usually describes transparency. 32-bit graphics systems contain four channels - three 8-bit channels for red, green, and blue (RGB) and one 8-bit alpha channel.

Hint: If you do not want an image to display the alpha channel, go to the 2D View tab (on page 281) in the Options dialog and select None in the Grid Size field.

Note: The alpha channel may not be supported by certain file formats and may be lost when a file is exported.

Interface

 **Red Channel**—Displays and hides the red color channel.

 **Green Channel**—Displays and hides the green color channel.

 **Blue Channel**—Displays and hides the blue color channel.

 **Alpha Channel**—Displays and hides the alpha color channel.

Copyright © Right Hemisphere 2007. All Rights Reserved.

3D Editor Toolbar

Menu bar > View > Controls and Toolbars > 3D Editor
Right-click menu bar > 3D Editor
Customize Layout dialog > Select 3D Editor check box > Apply



The 3D Editor toolbar is used to transform (move, rotate, and scale) selected objects within the current scene. You can also move and rotate the scene's pivot point. Animation can be edited using the Edit keyframe animation tool in conjunction with the other 3D Editor tools. You can also use the toolbar in conjunction with the Object Position controls (on page 328) to transform objects and object pivot points along their individual axes.

The toolbar can be resized, moved, floated, docked, and closed (on page 422) similar to the functionality in most Windows applications.

Various rules (on page 93), determining movement, rotation, scaling, and moving pivot points, govern the use of this toolbar.

Interface

 **Home—**Returns the model to the previously saved view.

 **Undo—**Displays a list of the last 3D Editor actions performed on the current file, up to a maximum of 10. After you perform an undo action, the next action is displayed.

 **Redo—**Displays a list of the last undo actions performed on the current file, up to a maximum of 10. After you perform a redo action, the next action is displayed.

 **Rectangular Selection** (on page 88)

 **Circular Selection** (on page 88)

 **Lasso Selection** (on page 88)

 **Rectangular Center Selection** (on page 88)

 **Window/Crossing Selection (on page 88)**

 **Pull Apart** (on page 95)

 **Select** (on page 88)

 **Move** (on page 96)

 **Rotate** (on page 96)

Copyright © Right Hemisphere 2007. All Rights Reserved.

Scale (on page 97)

Move Pivot Point (on page 98)

Rotate Pivot Point (on page 99)

X Axis (on page 93)

Y Axis (on page 93)

Z Axis (on page 93)

Local (on page 80)

Parent (on page 80)

World (on page 80)

Screen (on page 80)

Edit Keyframes (on page 109)

CADTools Toolbar

Menu bar > View > Controls and Toolbars > CADTools
Right-click menu bar > CADTools



The CADTools toolbar is used to perform a number of actions on selected objects or on the entire scene.

Interface

Invert Faces (on page 116)

Invert Normals (on page 116)

Invert Faces and Normals (on page 116)

Unify Normals (on page 117)

Copyright © Right Hemisphere 2007. All Rights Reserved.

 **Remove Internal Parts** (on page 119)

 **Remove Small Parts** (on page 120)

-  **Settings** (on page 120)

 **Separate Meshes** (on page 121)

 **Join Equal Points** (on page 122)

-  **Settings** (on page 123)

 **Reduce Model** (on page 123)

 **Convert to Double-Sided** (on page 130)

 **Explode Objects** (on page 130)

-  **Settings** (on page 132)

 **Color Objects** (on page 133)

-  **Settings (on page 133)**

 **Randomize Objects**

- **Settings**

Cutting Toolbar

Menu bar > View > Controls and Toolbars > Cutting Toolbar



The Cutting toolbar is used to select a semi transparent rectangular clipping box, or cross section plane, which can be moved around the scene.

Interface

 **Clipping Box** (on page 147)

 **Top**

 **Bottom**

 **Left**

Copyright © Right Hemisphere 2007. All Rights Reserved.

Right

Back

Front

Quarters (on page 147)

None

First quarter

Second quarter

Cut by clipping box (on page 147)

Cross Section (on page 147)

Cut by Cross Section (on page 147)

Cross section using Cross Section plane (on page 147)

Settings (on page 149)

Display Toolbar

Menu bar > View > Controls and Toolbars > Display
Right-click menu bar > Display
Customize Layout dialog > Select Display check box > Apply



The Display toolbar is used to apply render modes (on page 70) to the scene, and to control the grid.

See also Display menu (on page 257).

Interface

Transparent Bounding Box (on page 70)

Solid (on page 70)

Transparent (on page 70)

Solid Wireframe (on page 70)

Line Illustration (on page 70)

Copyright © Right Hemisphere 2007. All Rights Reserved.

Solid Outline (on page 70)

Shaded Illustration (on page 70)

Bounding Box (on page 70)

Transparent Bounding Box Outline (on page 70)

Transparent Wireframe (on page 70)

Wireframe (on page 70)

Shaded Wireframe (on page 70)

Hidden Wireframe (on page 70)

Vertices (on page 70)

Shaded Vertices (on page 70)

Grid (on page 85)

Drawing and Markup Toolbar

Menu bar > View > Controls and Toolbars > Drawing and Markup
Right-click menu bar > Drawing and Markup
Customize Layout dialog > Select Drawing and Markup check box > Apply



The Drawing and Markup toolbar comprises a number of buttons with which you can perform a number of markup actions on the scene.

Interface

Note Line (on page 151)

Note Point (on page 151)

Note Arrow (on page 151)

Note Circle (on page 151)

Text (on page 151)

Copyright © Right Hemisphere 2007. All Rights Reserved.

 **Callout** (on page 151)

 **Note Global Settings** (on page 152)

 **Markup Line** (on page 151)

 **Markup Point** (on page 151)

 **Markup Arrow** (on page 151)

 **Markup Circle** (on page 151)

 **Text** (on page 151)

 **Markup Global Settings** (on page 152)

 **Detail View** (on page 157)

 **Line** (on page 151)

 **Polyline** (on page 151)

 **Arc** (on page 151)

 **Freehand** (on page 151)

 **Closed Freehand** (on page 151)

 **Rectangle** (on page 151)

 **Circle** (on page 151)

 **Cloud** (on page 151)

 **Drawing Global Settings** (on page 152)

 **Show / Hide Markups** (on page 156)

 **Minimize All Notes** (on page 156)

Copyright © Right Hemisphere 2007. All Rights Reserved.

 **Continuous Draw - use override Linestyle** (on page 159)

 **Continuous Draw - do not use override Linestyle** (on page 159)

 **Override Linestyle Settings** (on page 160)

 **Add Leaderline** (on page 151)

Drawing and Markup Properties

Double-click markup in viewport, 3D Objects list or Layers list
Right-click markup in viewport, 3D Objects list or Layers list > Object Properties

Using the Edit Markup dialog, you can modify the selected Drawing or Markup. The tabs and options differ depending on the type of markup you are editing. For example, you can modify the callout text and color using the Callout tab.

Any editing you perform using this dialog is applied to the selected markup only, and for all new markups subsequently created. You can make global changes to markups using the various Settings dialogs (on page 350), and to PMI markups via the PMI Settings dialog (on page 377).

Procedure

To open the Edit Markup dialog, do one of the following:

- Double-click the markup in the viewport, 3D Objects list or Layers list.
- Highlight the markup, then right-click the markup in the viewport, 3D Objects list or Layers list, and then click **Object Properties**.

Interface

Use Global Settings—Use settings defined in the Global Settings (on page 152) dialog.

Override Settings

- **Line color**—Used to open the color selector and select the callout's line color.
- **Text color**—Used to open the color selector and select the callout's text color.
- **Background color**—Used to open the color selector and select the background color.
- **Material**—Select a material from the drop down list.
- **Transparent**—If selected the background color is transparent.
- **No border**—If unchecked a border will be drawn around the note/callout.
- **Always on top**—Draws markups on top of all objects. This ensures that when you rotate the model, the markups are always displayed on top.
- **Line end**—Used to select the leader style for the note markup.

Note / Markup

- **Note**—Used to enter text for note callouts.
- **Markup**—Used to enter text for markup callouts.
  - **User name / timestamp**—Displayed for markups only, shows the name of the person who created the markup, and the date and time that the markup was created.

Copyright © Right Hemisphere 2007. All Rights Reserved.

Link

- **URL**—Used to enter a URL address to attach the callout.
- **Model View**—Used to link to a specific model view.
- **Step**—Used to link to a particular step.

OK—Closes the dialog and applies the settings. Any changes made to the settings are saved.

Cancel—Cancels the process and closes the dialog. Any changes made to the settings are lost.

Help—Opens the relevant Help topic.

Illustration Toolbar

Menu bar > View > Controls and Toolbars > Illustration
Right-click menu bar > Illustration



The Illustration toolbar is used to render images in either raster or vector form.

Interface

 **Raster Illustration** (on page 162)

 **Vector Illustration** (on page 163)

Lights Toolbar

Menu bar > View > Controls and Toolbars > Lights
Right-click menu bar > Lights
Customize Layout dialog > Select Lights check box > Apply



The Lights toolbar can be used to apply lighting to scenes to give a more realistic appearance to the current scene.

See also Lights Menu (on page 260).

Interface

 **Lights from File** (on page 260)

 **White Lights** (on page 260)

 **Day Light** (on page 260)

Copyright © Right Hemisphere 2007. All Rights Reserved.

 **Hard Lights** (on page 260)

 **Colored Lights Red / Green** (on page 260)

 **Colored Lights Blue / Green** (on page 260)

 **Blue Lights** (on page 260)

 **Marsiano Lights** (on page 260)

 **Cube Lights** (on page 260)

 **CAD Optimized Lights** (on page 260)

 **Single Light from Eye** (on page 260)

 **All Lights Off** (on page 260)

 **Specular Lights** (on page 260)

 **Increase Brightness** (on page 260)

 **Decrease Brightness** (on page 260)

 **Restore Brightness** (on page 260)

Measurements Toolbar

Menu bar > View > Controls and Toolbars > Measurements
Right-click menu bar > Measurements
Customize Layout dialog > Select Measurements check box > Apply



The Measurements toolbar is used to measure the distance, or angle, between two elements in a scene, or within a single element, and modify the measurement properties.

Interface

 **Distance (on page 171)**

 **Angle** (on page 171)

Copyright © Right Hemisphere 2007. All Rights Reserved.

Global settings (on page 174)

Calculate Area—Calculates the surface are of the model using the models current measurement unit.

Calculate Volume—Calculates the volume of the model using the models current measurement unit.

Mesh Select Toolbar

Menu bar > View > Controls and Toolbars > Mesh Select



The Mesh Select toolbar is used to select elements of a mesh. This includes vertices, faces, surfaces (co-planar faces), boundaries (separable meshes), and polylines. Specific materials can be dropped on selected faces, and selected meshes can also be deleted.

A right-click menu containing further options is available for mesh selection (on page 397).

Interface

Select mesh vertex—Selects an object's vertices.

Select mesh polygon—Selects an object's faces.

Select surface coplanar or curved—Selects an object's surface. For example, a large flat surface may comprise of many triangles. A surface is all the faces that are co-planar.

Select separate mesh element—Selects objects where the object is a complete connected surface. That is, collapsed into a single object.

Select polyline—Selects a polyline within the model. That is, where polylines are individual lines (not edges of lines).

Copyright © Right Hemisphere 2007. All Rights Reserved.

Navigation Toolbar

Menu bar > View > Controls and Toolbars > Navigation
Right-click menu bar > Navigation
Customize Layout dialog > Select Navigation check box > Apply



Use the Navigation toolbar to view images and scenes from various angles and scales, including rotating models and rolling the camera.

Interface

 **Rotate** (on page 65)

 **Scale** (on page 66)

 **Pan** (on page 64)

 **Zoom In** (on page 67)

 **Zoom Out** (on page 67)

 **Zoom Window** (on page 67)

 **Best Fit** (on page 67)



Standard View (on page 67)

PMI Toolbar

Menu bar > View > Controls and Toolbars > PMI
Right-click menu bar > PMI
Customize Layout dialog > Select PMI check box > Apply



The PMI toolbar is used to toggle the view of PMI markups, display any metadata that is present in the file, and establish the default PMI markup settings.

Note: You must have the PMI module (on page 220) installed on your computer to gain access to this toolbar.

Interface

 **Text—**Displays basic line and vector markups.

Copyright © Right Hemisphere 2007. All Rights Reserved.

 **Rich Text—**Displays special formatted text markups.

 **GDT—**Displays measurements, tolerances, material data, and reference datum.

 **Dimensions—**Displays detailed dimension line markups.

 **Datum—**Displays special reference points or planes for measurement markups sometimes shown as a single letter enclosed within a box.

 **Roughness**—Displays the surface finish or roughness markups.

 **Show / Hide Metadata**—Displays attributes and properties that were associated with parts when they were created.

 **Metadata** (on page 376)—Opens the Metadata dialog and displays attributes and properties that are associated with a part when it was created.

 **Settings** (on page 377)—Opens the PMI Settings dialog and is used to modify the settings for PMI markups.

Metadata Dialog

PMI toolbar > Metadata

Using the Metadata dialog, you can view the attributes and properties that are associated with parts when they are created, including surface tolerance data and title block information.

Procedure

To open the Metadata dialog:

Click **Metadata**  on the PMI toolbar.

Interface

File Information—Displays information relating to the file current.

Parts Information—Displays all the part names for all parts with the current file. Note that if you double-click the part in this list, the part details are displayed.

- **Part**—The part name and number.

Parts Details—Displays details for the part selected in the Parts Information list.

OK—Closes the dialog.

Help—Opens the relevant Help topic.

Copyright © Right Hemisphere 2007. All Rights Reserved.

PMI Settings Dialog

PMI toolbar > Settings

Using the PMI Settings dialog, you can modify the settings for PMI markups. The settings are saved to your computer registry (on page 30) for future use. Any changes you make to the settings are applied to all PMI markups that are subsequently viewed.

Procedures

To open the PMI Settings dialog:

Click **Settings**  on the PMI toolbar.

To modify the PMI markup settings:

1. Open a 3D file (on page 39).
2. Click **Settings**  on the PMI toolbar.
3. Make the selections you require.
4. Click **OK**.

Interface

Display—Used to specify how the PMI markup data is displayed.

- **Always On Top**—Draws the markup and markup lines on top of, and through all the objects in the scene even if the markup is behind the object or obscured by the geometry.
- **Wireframe arrows**—Renders all arrows as line segments instead of standard 'filled' arrows. Note that this option becomes inactive if the current file does not have wireframe arrows.
- **Billboard Mode**—Draws the dimension as a billboard. That is, the dimension rotates to always face the camera. When printed to a vector-based file, the measurement is converted to vector line art

Colors—Used to edit and change colors of the PMI markups.

- **Leaders**—Used to open the color selector and select the color of the markup leaders.
- **Text**—Used to open the color selector and select the markup text color.

OK—Closes the dialog and applies the settings. Any changes made to the settings are saved.

Cancel—Closes the dialog. Any changes made to the settings are lost.

Help—Opens the relevant Help topic.

Copyright © Right Hemisphere 2007. All Rights Reserved.

Realight Toolbar

Menu bar > View > Controls and Toolbars > Realight
Right-click menu bar > Realight
Customize Layout dialog > Select Realight check box > Apply



The Realight toolbar comprises a single button with which you can simulate global illumination within a scene via the Realight dialog (on page 185).

Interface


Realight (on page 184)

Render Toolbar

Menu bar > View > Controls and Toolbars > Rendering
Right-click menu bar > Render
Customize Layout dialog > Select Render check box > Apply



The Render toolbar is used to render scenes to the viewport or to file, select a renderer, and modify the renderer properties. Properties for the display renderer (on page 259) graphics cards installed on your computer properties for the can be set using the Render tab (on page 292) on the Options dialog.

See Render menu (on page 265) for further information.

Interface


Render (on page 188)


Render To File (on page 189)


Auto Fly-Around (on page 189)

Raytracer (on page 268)

Software Z-Buffer (on page 268)


Renderer Properties (on page 268)

Copyright © Right Hemisphere 2007. All Rights Reserved.

Solid Tools Toolbar

Menu bar > View > Controls and Toolbars > Solid tools
Right-click menu bar > Solid tools
Customize Layout dialog > Select Solid tools check box > Apply



Note: This menu option functions only with IGES files.

Interface

Solid Tessellation

Tessellation can be used to modify the arrangement and density of models' polygons. In doing so, a finer mesh is created for models as the curvature gets tighter.

There are three tessellation parameters:

- **Normal deviation**—Normal deviation is the maximum angular deviation allowed between a face and its triangulation. Pairs of triangles cannot incorporate a dihedral angle greater than this amount. This units are expressed in degrees. This setting determines the minimum number of faces that may represent the circumference of a true cylinder, regardless of the surface deviation (on page 42) setting. Medium and small objects relative to the total scene bounding box may well easily fall within surface tolerance tessellation tolerances with perhaps only four or five sides representing a true cylindrical surface. Therefore, by using this tolerance setting you are controlling the 'coarseness' of tessellation regardless of the geometry's relative size in the scene. For example, an angle of 30 results in a 12-sided tessellated cylinder, and an angle of 45 results in an 8-sided tessellated cylinder, range is 0 - 100.
- **Surface deviation**—Surface deviation is the maximum distance that is allowed between a surface described by the BREPs (boundary representations), and the polygons that are produced by the tessellation process to approximate that surface. That is, between an edge and its tessellation. A smaller surface deviation causes more polygons to be produced creating smoother models. The units are expressed as unit size based on those used by the model, range is 0 -1.
- **Sewing tolerance**—If you have a number of patches that make up a surface, this option will 'sew' together all the adjacent faces into one surface, range is 0 - 1.

Polygons

- **Only triangles**—If checked generates only triangular meshes.
- **Quadrilaterals and triangles**—If checked generates quadrilateral (4 sided faces) and triangular meshes.

Dynamic update—If checked the model in the viewport window updates dynamically.

OK—Closes the dialog and applies the settings. Any changes made to the settings are saved.

Cancel—Cancels the process and closes the dialog. Any changes made to the settings are lost.

Apply—Applies all changes.

Help—Opens the relevant Help topic.

Copyright © Right Hemisphere 2007. All Rights Reserved.

Standard Toolbar

Menu bar > View > Controls and Toolbars > Standard
Right-click menu bar > Standard
Customize Layout dialog > Select Standard check box > Apply



The Standard toolbar is used to open, export and print files, go to the previous or next file displayed in the File list, stop the application opening the previous or next file, create a slide show, and display the different Explorer bar views.

Interface

 **New Empty Scene** (on page 38)

 **Open a File** (on page 39)

 **Save As** (on page 55)

 **Print** (on page 248)

 **Previous File**

 **Next File**

 **Slide Show** (on page 191)

 **Stop** (on page 39)

 **Search** (on page 305)

 **Folders** (on page 300)

 **History** (on page 304)

 **Favorites** (on page 302)

 **Full-Screen Mode** (on page 80)

Copyright © Right Hemisphere 2007. All Rights Reserved.

Surfaces Toolbar

Menu bar > View > Controls and Toolbars > Surfaces
Right-click menu bar > Surfaces
Customize Layout dialog > Select Surfaces check box > Apply



The Surfaces toolbar is used to control the various surfaces within the scene such as the default material, textures, and smoothing.

Interface

 **Use Default Material—**Displays and hides the default material on all objects. This is helpful when reviewing files that have very light or dark materials.

 **Use Existing Smoothing—**Displays and hides the existing smoothing information from the current file.

 **Show Transparency—**Displays and hides transparency in those materials that are transparent.

 **Show Textures—**Displays and hides textures on objects in Solid render mode. The textures are displayed in the most realistic and detailed representation for the scene.

Thrustlines Toolbar

Menu bar > View > Controls and Toolbars > Thrustlines
Right-click menu bar > Thrustlines
Customize Layout dialog > Select Thrustlines check box > Apply



The Thrustline toolbar contains special tools which allow you to create and modify Thrustlines easily. It will draw the Thrustline for you automatically, after you have indicated which objects the thrustline should connect, however, a certain level of adjustment will be allowed.

- A Thrustline consists of a list of Thrustline segments, each line segment connects two objects. The thrustline will appear as one single node/object in the scene tree and all the line segments will be in the same colour and style.
- For each Thrustline, there is an axis/direction called **principle direction**. It indicates the primary direction of the thrustline. All the line segments within a thrustline will share the same principle direction.
- Each line segment connects two objects which will be the start point and end point of the line segment.
- Each object has two "bound points" which indicate where the Thrustline segments are connected to that object.
- Each line segment consists of three straight lines. Two parallel lines along the principle direction that radiate from the bound points. And another line (center line) that connects these two lines. Each line segment has its own plane which can be different for other line segments and in simple cases collapses to a single line.

Copyright © Right Hemisphere 2007. All Rights Reserved.

- Each Thrustline has its own corresponding layer. How the objects are connected together by the Thrustline depends on the order of the objects in the Thrustline layer. It is important to note that the Thrustline starts from the **first** object in the layer then connects the second object then third…etc. When the thrustline is created, there is a default object order for that layer.

Interface

 **Create—**You can select objects from the scene and click this button to create a thrustline. If fewer than 2 objects are selected, a warning error message dialog displays. A new layer called "**Thrustline #X**" is created, and all selected objects are added to that layer.

 **Adjust principle axis—**When the thrustline was first created, a default principle direction was calculated. This control will select a face and use that normal as the direction. The position of the thrustline is automatically chosen on creation. If it is in the wrong place then it can be moved using the regular 3D editor tools.

 **Show / Hide—**Shows or hides all the thrustlines in the scene.

 **Global Settings—**This displays the global thrustline settings dialog. You can define the default settings:

- **Material—**Choose a material for the thrustlines from the list or **Edit** an existing material using the **Line Style** (on page 354) tab.

There are also 3 thrustline 'templates' to choose from (Small, Medium and Large), if none are configured, then, when you create a thrustline for the first time, the **Thrustline SMALL template** will be used and will be displayed in the **Materials** folder. Once a template has been configured then each time you create a thrustline it will use this template as default. However, if a color is selected it will override the material color on material creation.

To configure a template:

- Select the template from the drop down material list.
- Click **Create**.
- Choose the options for the thrustline in the **Line Styles (on page 354) tab**.
- Click **OK**.

To **Edit** an existing template:

- Select the template in the **Materials** folder.
- Right click the template and select **Material Properties**.
- Choose the options for the thrustline in the **Line Styles (on page 354)** tab.
- Click **OK**.

- **Color—**Choose a line color from the color selector.
- **Always on top—**Thrustlines are displayed on top of the scene objects.
- **Subsegments—**The number of segments that comprise the thrustline.
- **Part Order—**A Thrustline is a line which passes through many objects, and each thrustline has it's own draw order, or Part Order.
  - **Calculated—**When you select this option, the thrustline uses a special algorithm which defines the draw order based on an objects spatial disposition.
  - **Selection—**When you select this option, the draw order is based on the selection order, i.e. first object selected, second object selected, etc..

Copyright © Right Hemisphere 2007. All Rights Reserved.

To delete a thrustline, highlight the thrustline and press **Delete**, or right click the thrustline and select **Delete Objects**.

OK—Closes the dialog. Any changes made to the settings are saved.

Cancel—Closes the dialog. Any changes made to the settings are lost.

Help—Opens the relevant Help topic.

Note: Any changes to the global settings will be reapplied to all the existing thrustlines unless a thrustline has it's own settings already defined.

UV Mapping Toolbar

Menu bar > View > Controls and Toolbars > UV Mapping
Right-click menu bar > UV Mapping
Customize Layout dialog > Select UV Mapping check box > Apply



The UV Mapping toolbar comprises a number of buttons with which you can perform and control UV mapping of selected objects, or of the entire scene.

Interface

 **Map Relax and Pack** (on page 198)

 **Pack** (on page 198)

 **Relax and Pack** (on page 201)

 **UV Remap** (on page 202)

 **Bake Realight Textures** (on page 203)

 **Settings** (on page 199)

Copyright © Right Hemisphere 2007. All Rights Reserved.

File List

Menu bar > View > Explorer Bar > Folders
Select folder in Folders panel
Select folder in History/Favorites list
Search panel > Perform search

The File list can be used to perform a number of actions including displaying the contents of the folder one level up from the current folder, generating thumbnails, and arranging and sorting the list.

Note: We discuss generating thumbnails in Generate Thumbnails Dialog (on page 273).

You can also create folders (on page 300), merge files (on page 53), refine searches (on page 51), and drag textures and shaders (on page 106) onto models. Additionally, many folder and file functions use standard Windows conventions, and as such are not described in detail. For example, cutting, pasting, and deleting.

A number of tabs are available in the File list:

- The Local tab is always shown when the File list is visible. It displays all files and folders contained within the current folder (on page 300).
- Whenever you perform a search (on page 48), a 'Search' tab is displayed listing all the files that match the search criteria. Search tabs can be used to refine your search further.
- The My 3D Models, Materials, Textures, and Shaders tabs are all created when you install Deep Exploration. They display all the folders and files contained within the 'My 3D Models' folder and all the available material, texture, and shader files respectively.
- The Gateway tabs are displayed if the Gateway Module (on page 205) is installed on your computer. Note that if you perform a search via Gateway, a 'Search' tab is also displayed that lists all the files that match the search criteria.

The File list tabs can be displayed in differing views and sorted in ascending or descending order, and you can change the way items are arranged, similar to the functionality in most Windows applications. For example, when tabs are displayed in a detailed view, the columns can be sorted in ascending or descending order and you can drag the columns to other locations within the tab. Note that a colored vertical line is displayed when a valid column insertion point becomes available.

All the tabs can be made visible and hidden as required. Files and folders can be dragged between the Folders panel (on page 300) and the File list to move them to other folders.

The File list includes a toolbar (on page 385) that can be used to display files with different layouts, and to cut, copy, paste, move, rename, delete, and search for files and folders. Context-sensitive right-click menus (on page 401) are available from where you can open selected drives and folders in separate windows, determine how file information is displayed, enter descriptions for individual files, arrange the icons, and add selected files to the Favorites list.

All your File list settings are automatically preserved between sessions.

Note: When you open an archive file (on page 673), the contents are automatically displayed in the File list.

Procedures

To show and hide the File list tabs:

Click **View > Explorer Bar** on the menu bar, and then click the tab you want to to show or hide.

Note: You can also click Close on the tab you want to hide.

To move up one level:

Copyright © Right Hemisphere 2007. All Rights Reserved.

Click **Up One Level** . The File list displays the contents of the higher level folder.

To arrange the tabs:

1. Do one of the following:
   - Choose **View** from the menu bar and click the arrangement type you want. For example, click Large Icons to view the files and folder as large icons in the File list.
   - Click the button for the arrangement type you want. For example, click the Small Icons button to view the files and folder as small icons in the File list.

To sort the columns:

1. Do one of the following:
   - Choose **View > Sort File List** (on page 255) from the menu bar and click the sort type you require. For example, click By Size to sort the list by the file size.
   - Click a column name for the column on which you want to sort. Depending on the order in which they were originally, the list is sorted in ascending or descending order. A small triangle on the column name indicates the order type.
2. Choose **View > Sort File List** from the menu bar and click **3D Files at Top** if you want to display all 3D files at the beginning of the list.
3. Choose **View > Sort File List** from the menu bar and click **Group View** if you want to groups the files by file type.

Note: The 3D Files at Top and Group View commands do not change the sort order when viewing the list in the List view.

To go to the previous file:

Click **Previous File**  on the Standard toolbar.

To go to the next file:

Click **Next File**  on the Standard toolbar.

To close a search tab:

Click **Close Search** on the tab you want to close.

Copyright © Right Hemisphere 2007. All Rights Reserved.

File List Toolbar

Menu bar > View > Explorer Bar > Folders
Select folder in Folders panel
Search panel > Perform search



The File list includes a toolbar that can be used to perform a number of functions relating to the display of files and folders including arranging the display, create new folders, generate thumbnails, and search for files and folders.

You can also cut, copy, paste, move, and search for files and folders, and rename and delete selected files, and go to the folder one level up form the current folder.

Note: A number of the File list functions are available from the Edit (on page 254) and View (on page 255) menus.

Interface

 **Up One Level**—Moves to the folder one level above the active folder.

 **Create Folder—**Creates a new folder within the selected drive or folder.

 **Thumbnails**—Displays a thumbnail view with the name of each file.

 **Tiles—**Displays a tiled view with the name, format, and size of each file.

 **Large Icons—**Displays a large icon and file name for each file.

 **Small Icons—**Displays a small icon and file name for each file.

 **List—**Displays the file names and icons arranged in columns.

 **Details—**Displays detailed information for each file.

 **Generate Thumbnails** (on page 273)—Used to create or update thumbnails in the thumbnails cache, for all files in the current folder.

 **Cut—**Removes the selected file or folder and its contents, from the File list and places it on the clipboard. You can then move it to another location.

 **Copy—**Copies the selected items to the clipboard.

 **Paste—**Inserts the files you have cut or copied into the selected location.

Copyright © Right Hemisphere 2007. All Rights Reserved.

 **Move To Folder**—Used to move the selected folder and files to another folder.

 **Copy To Folder—**Used to copy the selected folder and files to another folder.

 **Rename File—**Used to rename the selected file.

 **Delete File—**Deletes the selected file.

Search field—Used to search through the File list for files and folders.

 **Close**—Closes the active tab.

My 3D Models Tab

Menu bar > View > Explorer Bar > My 3D Models

The 3D Models folder is automatically created when you install Deep Exploration. The 3D Models tab displays all the files and folders files that are contained within this folder.

Various right-click menus (on page 401) are available in the File list tabs from where you can perform a variety of functions.

Downloads Tab

Menu bar > View > Explorer Bar > Downloads

The Downloads folder is automatically created when you install Deep Exploration. The Downloads tab displays all the sample files that are delivered with the application and contained within this folder.

Various right-click menus (on page 401) are available in the File list tabs from where you can perform a variety of functions.

Copyright © Right Hemisphere 2007. All Rights Reserved.

Gateway Tabs

Menu bar > View > Explorer Bar > Gateway

The Gateway tabs are displayed in the File list (on page 384) if the Gateway Module (on page 205) is installed on your computer. They are used to view all derivatives, associated files, and subgroups (.rh files) of items selected in the Gateway tree (on page 309), and also assets located by performing a Gateway search (on page 213).

Note that any assets that are located during a search are displayed in a Search tab in the File list.

Viewport Display

- Whenever you click an item in a Gateway tab, it is downloaded (on page 212) to the temporary files folder automatically, and displayed in the viewport.
- Items must be downloaded before they can be displayed in the Deep Exploration viewport via clicking that item in the Gateway tree. All the derivatives, associated files, and subgroups that correspond to that item are then also displayed in the Gateway tabs.

Interface

Derivatives tab—Displays all the derivatives that correspond to the item selected in the Gateway tree.

Associated files tab—Displays all the associated files that correspond to the item selected in the Gateway tree.

Subgroup tab—Displays all the folder and file subsets and subgroups that correspond to the top-level folder or file in the Gateway tree.

Search Tabs

Menu bar > View > Explorer Bar > Search > Local file search
Menu bar > View > Explorer Bar > Search > Web search
Menu bar > View > Explorer Bar > Gateway > Search tab

Individual 'Search' tabs are automatically displayed in the File list every time you perform a search. The tab displays all the files that match the search criteria. These tabs can be used to refine your search further, and they can be closed as required.

The tabs can be used to perform various functions depending on the type of search you are performing:

- A local file search (on page 48).
- A Web search (on page 48).
- A Gateway search (on page 205).

Various right-click menus (on page 401) are available in the File list tabs from where you can perform a variety of functions.

Copyright © Right Hemisphere 2007. All Rights Reserved.

Textures Tab

Menu bar > View > Explorer Bar > Textures

The Textures folder is automatically created when you install Deep Exploration. The Textures tab displays all the sample texture files that are delivered with the application and contained within this folder.

Various right-click menus (on page 401) are available in the File list tabs from where you can perform a variety of functions.

Shaders Tab

Menu bar > View > Explorer Bar > Shaders

The Shaders folder is automatically created when you install Deep Exploration. The Shaders tab displays all the sample shader files that are delivered with the application and any additional shaders that may by saved to this folder.

Using this tab, you can drag shaders onto models, after which, the shader can be edited.

Various right-click menus (on page 401) are available in the File list tabs from where you can perform a variety of functions.

Materials Tab

Menu bar > View > Explorer Bar > Materials

The Materials folder is automatically created when you install Deep Exploration. The Materials tab displays all the sample material files that are delivered with the application and contained within this folder.

Various right-click menus (on page 401) are available in the File list tabs from where you can perform a variety of functions.

Symbols Tab

Menu bar > View > Explorer Bar > Symbols

The Symbols folder is automatically created when you install Deep Exploration. The Symbols tab displays all the sample symbol files that are delivered with the application and contained within this folder.

Using this tab, you can drag symbols onto models.

Various right-click menus (on page 401) are available in the File list tabs from where you can perform a variety of functions.

Copyright © Right Hemisphere 2007. All Rights Reserved.

Right-Click Menus

Deep Exploration uses several different types of right-click menu that provide commands to manage and manipulate your files and assets.

The menus displayed may vary depending on the graphics card installed in your computer. Additionally, many menus use standard Windows conventions, and as such are not described in detail.

Note: Commands relating to external applications installed on your computer are not described.

2D Viewport Menus

Right-click 2D viewport

A 2D menu appears when you right-click in the 2D viewport. The options differ depending on the current file format.

Interface

2D Tools (on page 274)—Used to control a number of image settings including modifying the image size and rotating the image.

Pages—Used to view a cubemap file using one of the six images of which the file is comprised. These images represent what you would see from a certain location if you were to look forward, left, right, backward, up, and down. This option is only displayed with cubemap files. For example, .dds file.

- **posx**—Displays the image as viewed from the left.
- **negx**—Displays the image as viewed from the right.
- **posy**—Displays the image as viewed from the bottom.
- **negy**—Displays the image as viewed from the top.
- **posz**—Displays the image as viewed from the front.
- **negz**—Displays the image as viewed from the back.

Zoom In (on page 67)—Zooms in on the image.

Zoom Out (on page 67)—Zooms out from the image.

Standard View (on page 67)—Zooms the image to its actual size.

Best Fit (on page 67)—Zooms the image to its best fit in the viewport.

Options (on page 280)—Opens the Options dialog and is used to configure your graphics files settings including colors and thumbnails.

Copyright © Right Hemisphere 2007. All Rights Reserved.

3D Viewport Menus

Right-click 3D viewport label
Right-click scene no selection
Right-click one or more objects

Various context-sensitive right-click menus are available when you right-click in the 3D viewport. The menus that appear depend on the location of your cursor.

Interface

Viewport menu—Appears when you right-click over the viewport label located in the top, left of the viewport. It includes all preset view (on page 76), user-defined view (on page 77), and render mode (on page 70) commands. It also includes all of the show/hide commands that can be set for individual viewports (on page 63).

Scene menu—Appears when you right-click over the scene with nothing selected. It includes various commands that relate specifically to the scene. For example, the camera motion (on page 80) and scene backgrounds.

Object menu—Appears when you right-click over the scene with one or more objects selected. It includes various commands that relate specifically to objects. For example, selecting (on page 88) and grouping objects.

Tools Right-Click Menu—Appears when you right-click over the scene with nothing selected or with one or more objects selected.

Right-Click Selection Menu—A selection menu is displayed if you press CTRL, right-click and then drag in the 3D viewport.

Viewport Right-Click Menus

Right-click 3D viewport label

The viewport right-click menu contains commands for controlling the display of the active viewports (on page 63): preset views (on page 76), user-defined views (on page 77), render modes (on page 70), viewport show/hide elements. It appears when you right-click over the viewport label in the top, left of the viewport.

These commands are local and are overridden by the menu bar commands (on page 248). For example, if you display a viewport in the Wireframe render mode and another viewport in the Line Illustration mode, selecting the Solid render mode from the Display menu displays all viewports in Solid mode.

Interface

Top (on page 76)—Displays the scene orthographically from the top of the scene in the selected viewport.

Bottom (on page 76)—Displays the scene orthographically from the bottom of the scene in the selected viewport.

Front (on page 76)—Displays the scene orthographically from the front of the scene in the selected viewport.

Aft (Back) (on page 76)—Displays the scene orthographically from the back of the scene in the selected viewport.

Copyright © Right Hemisphere 2007. All Rights Reserved.

Right (on page 76)—Displays the scene orthographically from the right of the scene in the selected viewport.

Left (on page 76)—Displays the scene orthographically from the left of the scene in the selected viewport.

User (on page 76)—The default user view. This command is only displayed when the camera is not at a defined view. That is, as soon as you rotate the model, the defined view is changed and this is the view that is seen.

Perspective (on page 76)—Applies perspective to the current view. Otherwise, the default parallel view is used.

Model Views (on page 393)—Used to select a model view in which to display the scene in the selected viewport.

Views (on page 393)**—**Used to select to view the scene using user-defined, isometric, dimetric, or trimetric preset views. This menu is also used to set and remove the default file type view.

Transparent Bounding Box—Displays each object as a transparent bounding box.

Solid—Displays each object as solid.

Transparent—Displays each object as transparent.

Solid Wireframe—Displays each object as solid with a wireframe. The wireframe colors are based on the object's colors.

Line Illustration—Displays each object as solid, based on the 'background top' color, with outlines. That is, a solid rendering with outlines overlaid on top.

Solid Outline—Displays each object as solid with outlines. That is, only silhouette and crease edges are shown.

Shaded Illustration—Displays each object as solid with outlines with material color overrides. That is, the objects' material colors can be replaced or blended with other colors using the Display Settings panel (on page 321).

Other—Used to select additional render modes (on page 70).

- **Bounding Box—**Displays each object as a bounding box.
- **Transparent Bounding Box Outline—**Displays each object as a transparent bounding box with outlines along the edges. Each bounding box is axis-aligned (AABB) instead of the object's actual geometry. An AABB is a box with all its edges parallel to the X,Y, and Z axes, and is the smallest box that can completely contain the given object.
- **Transparent Wireframe—**Displays each object as transparent with a wireframe. The wireframe colors are based on the object's colors.
- **Wireframe—**Displays each object as a wireframe. The wireframe colors are based on the object's colors.
- **Shaded Wireframe—**Displays each object as a shaded wireframe. The wireframe colors are based on the object's material colors.
- **Hidden Wireframe—**Displays or hides the wireframe view without any visible hidden surfaces. A similar effect can be obtained using Solid Outline mode with the outline angle set to '0'.
- **Vertices—**Displays all objects as vertices.
- **Shaded Vertices—**Displays all objects as shaded vertices. The shading colors are based on the object's material colors.

Restore Background Color—Restores the default background color.

Note: This option is only available when an alternative background color has been defined manually in the Model View Properties dialog.

Copyright © Right Hemisphere 2007. All Rights Reserved.

Show Output Size—Displays the model in the selected paper size.

Show Back-Facing Geometry—Displays or hides any back-facing geometry.

Show Bones—Displays or hides bones.

Show Cameras and Lights—Displays or hides the scene lights and cameras.

Show Markups—Displays or hides markups.

Show Scene Bounding Box—Displays or hides the scene bounding box.

Model Views Menu

Right-click 3D viewport label > Model Views

The Model Views menu is used to view scenes through any model views (on page 77) that you have created.

When you select a model view:

- The active viewport is set to the associated camera and render mode.
- The objects in the associated layer are made visible.
- All objects that are not associated with the view become invisible.

Interface

[view name]—Displays the scene through the selected model view camera.

Views Menu

Right-click 3D viewport label > Views

The Views menu is used to view scenes through any user-defined views or through the isometric, dimetric, or trimetric preset views.

You can also set and remove the current view as the default for the current file type, and you can remove the default file type views from all file types.

Interface

Camera [number] (on page 262)—Displays the scene through the selected camera.

30 Isometric—Used to select a 30º isometric viewpoint from the selected point through which to view the scene. All lengths are parallel to the axes and are displayed at their true length. See Preset Views (on page 76) for information on the viewpoint menu commands.

27 Isometric (1:2)—Used to select a 27º isometric viewpoint through which to view the scene. See Preset Views (on page 76) for information on the viewpoint menu commands.

45 Isometric (Military)—Used to select a 45º isometric viewpoint through which to view the scene. See Preset Views (on page 76) for information on the viewpoint menu commands.

Dimetric (42/7)—Used to select a dimetric viewpoint through which to view the scene. See Preset Views (on page 76) for information on the viewpoint menu commands.

43 Trimetric—Used to select a 43º trimetric viewpoint through which to view the scene. See Preset Views (on page 76) for information on the viewpoint menu commands.

Copyright © Right Hemisphere 2007. All Rights Reserved.

48 Trimetric—Used to select a 48º trimetric viewpoint through which to view the scene. See Preset Views (on page 76) for information on the viewpoint menu commands.

User-defined views (on page 77)—Displays the scene using the selected user-defined view.

Set the Current View as Default for current format—Sets the current camera view for all files of the current type.

Erase Default Camera for current format—Restores the original camera view for the current file type.

Erase Default Camera for all files—Restores the original camera view for all file types.

Scene Right-Click Menu

Right-click scene no selection

The scene right-click menu contains commands for controlling various scene elements; camera motion, cross section plane display, auto-rotation, the scene background, and object display. You can also access and modify the scene properties. For example, you can modify the global ambient color, the scene's units, and the scene's element colors.

This menu appears when you right-click over the scene with nothing selected. The commands differ depending on whether objects are displayed or hidden.

These commands are local and are overridden by the menu bar commands (on page 248). For example, if you display a viewport in the Wireframe render mode and another viewport in the Line Illustration mode, selecting the Solid render mode from the Display menu displays all viewports in Solid mode.

Note: The Scene menu is only displayed when no objects are selected. If you select an object using this menu, the next time you right click in the viewport, the Object menu appears.

Interface

Tools (on page 396)—Used to control a number of scene elements including removing duplicate materials and meshes.

View to Active Object—Zooms the camera in on the active object. You can also press V on your keyboard with an object selected.

View to Visible Objects—Is used to focus the camera on all the visible objects. You can also press V on your keyboard with no selection.

View to All Objects—Is used to focus the camera on all visible and hidden objects.

Standard View (on page 75)—Displays the scene in its standard camera view in the current viewport.

World Coordinate System (on page 80)—Aligns the coordinates to control the camera movement along the world axes.

Note: Selecting the world system in the 3D Editor toolbar affects the 3D Editor tools only.

Screen Coordinate System (on page 80)—Aligns the coordinates to control the camera movement along the viewport axes.

Show Cross Section—Displays and hides the scene's cross section plane.

Reset Cross Section—Moves the cross section plane back to its original position in the scene.

Copyright © Right Hemisphere 2007. All Rights Reserved.

Auto-Rotate—Rotates the model automatically. When the model is rotated with the mouse, auto rotate is initiated in the direction and at the speed of the mouse action until you click over the model again. This command may lessen the display performance.

Pan Mode for Flat Files—Constrains the camera to pan mode for 'flat' files. For example, a .cgm file. This ensures that even if a flat file has 3D object coordinates, it cannot be rotated.

Open Background (on page 83)—Used to add an image to use as the scene's background.

Background Image (on page 83)—Used to modify or clear the scene background image.

- **Stretch**—Scales the image to fit the viewport in real-time.
- **Tile**—Tiles the background image in the viewport.
- **Center**—Centers the background image in the viewport.
- **Clear Background**—Removes the background image from the scene.

Select All—Selects all objects in the scene.

Select Same Level Objects (on page 169)—Selects all objects that are on the same hierarchy level. This is helpful when creating layers that you want to be made from objects that are at the same hierarchy level.

Deselect Same Level Objects (on page 169)—Clears all objects that are on the same hierarchy level from selection.

Show All Objects—Displays all objects.

Hide All Objects—Hides all objects in the scene.

Scene Properties (on page 333)—Opens the Scene Properties dialog and is used to view and edit the current scene's properties.

Object Right-Click Menu

Select objects > Right-click viewport

The object right-click menu contains commands for controlling the display of objects including hiding, selecting, and grouping objects. You can also access and modify the objects' properties.

This menu appears when you right-click over the scene with one or more objects selected. The commands differ depending on whether objects are displayed or hidden, the number of objects selected, or if the object is a group or belongs to a group.

These commands are local and are overridden by the menu bar commands (on page 248). For example, if you display a viewport in the Wireframe render mode and another viewport in the Line Illustration mode, selecting the Solid render mode from the Display menu displays all viewports in Solid mode.

Note: The Object menu is only displayed when one or more objects are selected. If you clear all objects from selection using this menu, the next time you right click in the viewport, the Scene menu appears.

Interface

Tools (on page 396)—Used to control a number of elements for selected objects including removing duplicate materials and meshes.

View to Active Object—Zooms the camera in on the active object. You can also press V on your keyboard with an object selected.

Copyright © Right Hemisphere 2007. All Rights Reserved.

View to Visible Objects—Is used to focus the camera on all the visible objects. You can also press V on your keyboard with no selection.

View to All Objects—Is used to focus the camera on all visible and hidden objects.

Standard View (on page 75)—Displays the scene in its standard camera view in the current viewport.

Select All—Selects all objects in the scene.

Select None—Clears all selected objects in the scene

Select Same Level Objects—Selects all objects that are on the same hierarchy level.

Deselect Same Level Objects—Selects all objects that are on the same hierarchy level.

Invert Selection—Inverts the current selection.

Select Sub-Objects—Selects all sub-objects of the selected object.

Note: You can also use various keyboard shortcuts (on page 433) to select sub-objects and clear sub-objects from selection.

Show All Objects—Displays all objects.

Show Selection—Displays all selected objects.

Hide All Objects—Hides all objects in the scene.

Hide Selection—Hides the selected object.

Hide Unselected—Hides all unselected objects.

Create Group (on page 102)—Creates a group when you have multiple objects selected.

Attach to Group (on page 102)—Attaches the selected objects to an existing group or to create a new group.

Detach from Group (on page 102)—Detaches the selected object from the selected.

Ungroup (on page 102)—Separates the selected group into separate objects.

Modifier (on page 182)—Applies a modifier to the selected 3D object.

Delete Objects—Deletes all selected objects.

Object Properties (on page 335)—Opens the Object Properties dialog and is used to modify the selected objects' properties.

Tools Right-Click Menu

Right-click scene no selection > Tools
Select objects > Right-click viewport > Tools
Scene Components panel > Scene tree > 3D Objects list > Right-click object > Tools
Scene Components panel > Scene tree > 3D Objects list > Right-click no selection > Tools

The Tools menu can be used to perform a number of functions including moving the pivot point and removing duplicate materials.

Certain options are only available depending on the current file type, and whether or not objects are selected. For example, if you right-click in the viewport with an object selected, the pivot point commands are available.

Copyright © Right Hemisphere 2007. All Rights Reserved.

Many of these commands are also available from the 3D Tools menu (on page 278) accessed via the menu bar. Here, we describe only the commands that are unique to the Tools right-click menu.

Interface

Move Pivot Point To Object Center—Moves the pivot point to the center of the object.

Move Pivot Point To Scene Center—Moves the pivot point to the center of the scene.

Move Pivot Point To Selection Center—Moves the pivot point to the center of the selection.

Convert to Double-Sided (on page 130)**—**Duplicates object polygons to display the same surface on the front and back faces of the objects.

Note: This function doubles the number of polygons. It may be more efficient to apply the double-sided attribute to an object (on page 335) or material (on page 351), or use CTRL+H to show the back-facing geometry.

Fly Camera to Selection—Zooms into the viewport to focus on the selected objects.

Invert Faces and Normals (on page 116)—Inverts all faces and normals.

Join Equal Points (on page 122)—Joins all the points that have equal (coincident) x,y,z coordinates.

Remove Degenerate Triangles—Removes all degenerate triangles from the scene or from the selected objects depending on your selection. This is helpful if you want to optimize the model size and render speed.

Remove Duplicate Faces—Removes all duplicate faces from the scene or from the selected objects depending on your selection. This is helpful if you want to optimize the model size and render speed.

Remove Duplicate Materials—Removes all duplicate materials from the scene or from the selected objects depending on your selection. This is helpful if you want to optimize the model size and render speed.

Remove Duplicate Meshes—Removes all duplicate meshes from the scene or from the selected objects depending on your selection. This is helpful if you want to optimize the model size and render speed.

Remove Internal Parts (on page 119)**—**Opens the Remove Internal Parts Wizard and is used to hide or delete internal objects from the model. This function cannot be reversed.

Unify Normals (on page 117)**—**Opens the Unify Normals dialog and is used to align all surface normals in the same direction.

Collapse Hierarchy (on page 102)—Collapses all sub-objects into the selected object hierarchy.

Note: Collapsing the hierarchy deletes any animation that may exist on sub-objects. If the scene is saved the original hierarchy cannot be recovered.

Separate Meshes (on page 121)**—**Groups a model that is grouped under one object but made up of a number of separate meshes, as separate meshes under the objects name.

Benchmark (on page 115)—Measures the speed of your computer and graphics card and sends the information to a text file.

Mirror—Mirrors objects in the scene.

Copyright © Right Hemisphere 2007. All Rights Reserved.

Mesh Select Right-Click Menu

Menu bar > View > Controls and Toolbars > Mesh Select > select option > Right-click object

The Mesh Select right-click menu contains commands for controlling mesh selection.

This menu appears when you right-click the object after selecting a mesh selection option from the toolbar. The commands differ depending on whether objects are displayed or hidden.

Interface

Vertex—Selects an object's vertices.

Polygon—Selects an object's faces.

Face—Selects an object's surface. For example, a large flat surface may comprise of many triangles. A surface is all of the faces that are co-planar.

Element—Selects objects where the object is a complete connected surface. That is, collapsed into a single object.

Line—Selects a polyline within the model.

Select by ID—Selects the face on the model by it's ID number.

Invert Selection—Selects the objects that are outside of the specified size or count.

Select All—Selects all objects.

Select None—Clears all selections.

Select faces with same material—Selects all faces on the model that share the same material.

Deselect faces with same material—Clears the selection.

Separate—Separates the mesh.

Delete Selection—Deletes the selected faces.

Right-Click Selection Menu

CTRL+right-click > Drag in 3D viewport

A selection menu is displayed if you press CTRL, right-click and then drag in the 3D viewport. Using this menu, you can choose to display all objects, front-sided objects, or back-sided objects.

Interface

All Objects—Displays all objects in the scene.

Front-Facing—Displays only front-facing objects in the scene.

Back-Facing—Displays only back-facing objects in the scene.

Cancel—Closes the menu.

Copyright © Right Hemisphere 2007. All Rights Reserved.

Animation Timeline Menus

Right-click object name in sequence hierarchy
Right-click sequence name in sequence hierarchy
Right-click track name in sequence hierarchy
Right-click node in animation timeline
Right-click in animation timeline

Various right-click menus are available from within the timeline and when the cursor is located over the hierarchy nodes. For example, if you right-click the object name, you can display the object's properties, and add new tracks.

Some of the commands are common to both menus. Here we describe all commands across all the animation timeline right-click menus.

Interface

Node / object list—Used to display the animation tracks of the individual duplicated objects (on page 99) or the object.

- **Node**—Displays the name and animation tracks of the selected Scene tree node. That is, the object instance.
- **Object**—Displays the name and animation tracks of the actual object that the selected Scene tree node represents.

Right-click sequence—Used to perform various functions for the selected sequence.

- **Copy**—Copies all currently displayed tracks to the clipboard.
- **Paste**—Pastes the copied tracks to the current sequence.
- **New Track**—Used to add various track types to the sequence hierarchy. The available track types depend on the current object type. For example, the Opacity track is available for most 3D objects, and the Pos/Rot/Scale and FOV tracks are available for camera objects.
- **Activate**—Activates the selected sequence.
- **Duplicate** (on page 318)—Used to duplicate the selected sequence.
- **Reverse**—Reverses the keys of the currently visible tracks of the current sequence; the first key becomes the last, and the last becomes the first.

Right-click track—Used to perform various functions for the selected track.

- **Copy**—Copies the selected track to the clipboard.
- **Paste**—Pastes the selected track to the current sequence.
- **Delete**—Deletes the selected track.
- **Track Properties**—Used to choose the type of track interpolation (on page 111), and to establish the start and end points of a cyclic animation.
  - **TCB Interpolation**—Applies TCB interpolation to the track. The spline (curve) is interpolated between each key to smooth the animation. Note that TCB interpolation is only available for certain types of tracks.
  - **Linear Interpolation**—Applies linear interpolation to the track. The track lines are linked directly between each key.
  - **Start Cyclic**—Sets the selected key as the start points of a cyclic animation.
  - **End Cyclic**—Sets the selected key as the start points of a cyclic animation.

Right-click timeline—Used to perform various functions for the selected animation.

- **Insert Key**—Creates a key in the closest frame to where you right-click.
- **Copy**—Copies the selected keys to the clipboard.
- **Paste**—Pastes the selected keys to the current time/frame.

Copyright © Right Hemisphere 2007. All Rights Reserved.

- **Pan Mode**—Used to pan the timeline view.
- **Scale Mode**—Used to scale the timeline view.
- **Selection Mode**—Used to select keys in the timeline.
- **Fit Horizontally**—Fits the current track into the timeline window in the horizontal direction. This is helpful if the frames are spread over a large duration.
- **Fit Vertically**—Fits the current track into the timeline window in the vertical direction. This is helpful if the components are spread over a broad number of values.
- **Auto-Fit**—Automatically fits the timeline in the available space. note that the auto-fit functionality become apparent when you view a different track.
- **Track Properties**—Used to choose the type of track interpolation, and to establish the start and end points of a cyclic animation.
  - **TCB Interpolation**—Applies TCB interpolation to the track. The spline (curve) is interpolated between each key to smooth the animation.
  - **Linear Interpolation**—Applies linear interpolation to the track. The track lines are linked directly between each key.
  - **Start Cyclic**—Sets the selected key as the start points of a cyclic animation.
  - **End Cyclic**—Sets the selected key as the start points of a cyclic animation.

Right-click key—Used to perform various functions for the selected key.

Note: Most of the commands that are displayed here relate to right-clicking the timeline, and as such as described above.

- **Key Properties** (on page 400)—Opens the Key Properties dialog and is used to manually set properties for the selected key.

Key Properties Dialog

Right-click key in Animation timeline > Key Properties

A number of properties can be viewed and/or set for keyframes using the Key Properties dialog.

Procedure

To open the Key Properties dialog:

Right-click a key in the animation timeline and click Key Properties.

Interface

Index—Display the current frame.

Time—The current time/frame.

X—The X axis position of the selected key.

Y—The Y axis position of the selected key.

Z—The Z axis position of the selected key.

Tension—The sharpness of the bend of the key's curve. A positive value tightens the curve at the key, while a negative value produces a wider bend. The default is 0.

Copyright © Right Hemisphere 2007. All Rights Reserved.

Continuity—The smoothness of the curve as it moves through the key. If the value differs from the default value of 0, it forms a corner at the keyframe. The direction of the corner depends on which side of the default value (0), the entered value is. For example, +1 or -1.

Bias—The balance between the curve before and after the key. A negative value gives more weight to the left side of the key, while a positive value gives more weight to the right side. The default value of 0 balances the curve on both sides of the key.

Soft—Applies the default 'soft' TCB setting to the selected key's.

Medium—Applies the default 'medium' TCB setting to the selected key's.

Hard—Applies the default 'hard' TCB setting to the selected key's.

File List Menus

Right-click folder in File list
Right-click file in File list
Right-click File list no selection

Various context-sensitive right-click menus are available when you right-click in the File list. The menus that appear depend on the location of your cursor or the current File list tab:

- **Folder menu** (on page 402): Appears when you right-click over a folder in the File list. This menu is identical to the right-click Folders panel menus.
- **File menu**: Appears when you right-click over a file in the File list. Many of these options are also common to the Folders panel menus (on page 402).
- **File list**: Appears when you right-click over the blank space in the File list. It includes various commands that relate specifically to File list. For example, sorting the File list and generating thumbnails.
- **Gateway menus** (on page 403): Appear when you are connected to a server via the Gateway Module (on page 205).

Additionally, many commands use standard Windows conventions and as such, are not described in detail. Here, we describe the options specific to File list.

Note: Certain menu options use standard Windows conventions and as such are not described here.

Interface

Open (on page 39)—Opens the selected file in the viewport.

Open in Deep Exploration with—Opens the selected file with the plugin of your choice. For example, you could open a .3dm file with either the Apple Quicktime 3D Metafile plugin or the Rhinoceros plugin.

Import With—Opens the selected file with the application of your choice. For example, 3ds Max, Photoshop, PowerPoint, or Maya.

Sort File List (on page 255)—Used to arrange files and folders in the File list.

Refresh File List—Refreshes the viewport display.

Generate Thumbnails (on page 273)—Creates or updates thumbnails in the thumbnails cache, for all files in the current folder.

Select all Files—Selects all folders and files contained within the current folder.

Batch Operations (on page 251)— to convert, or render and convert all files in the select in the selected folder.

Copyright © Right Hemisphere 2007. All Rights Reserved.

Describe—Opens the Edit Description dialog and is used to enter a description for the selected folder or file.

Import Options (on page 40)— to modify and apply import properties, if any, to the format type. These options differ depending on the selected format, and many are common between the formats. If, when importing files, there is more than one plugin with which you can import a file, you can choose the plugin with which you want to import the file.

Add To Favorites (on page 302)—Adds the selected file to the Favorites list.

Folders Panel Menus

Folders panel > Right-click drive
Folders panel > Right-click folder

Various context-sensitive right-click menus are available when you right-click drives and folders in the Folders panel. The available commands differ depending on whether the current selection is a drive local to your computer, a network drive, or a folder. Additionally, many commands use standard Windows conventions and as such, are not described in detail.

Interface

Open—Opens the selected drive or folder contents in a separate window.

Explore—Opens and explores the selected drive or folder in a separate window.

Search—Opens the Search Results dialog and is used search through the selected drive or folder.

Make Available Offline—Opens the Offline Files Wizard and makes the selected drive or folder available when you are not connected to a network.

Synchronize—Synchronizes the selected drive or folder.

Sharing and Security—Modifies sharing and security properties for the selected drive.

Add to Zip—Adds the selected drive or folder to a .zip file.

Add to [folder name] Zip—Adds the selected drive or folder to a .zip file with the same name.

Format—Formats a local drive.

Disconnect—Disconnects a network drive from the network.

Send To—Used to send or copy the selected folder and its contents to:

- A compressed zipped folder.
- The desktop.
- A mail recipient.
- The 'My Documents' folder.
- The 3.5 floppy drive.

Batch Operations—Used to convert, or render and convert all files in the selected folder.

Cut—Removes the selected folder and its contents and place them on the clipboard. You can then move it to another location.

Copy—Copies the selected folder and its contents to the clipboard. You can then paste it to another location.

Copy Location—Copies the full path name of the selected folder to the clipboard. You can then paste it to another location.

Copyright © Right Hemisphere 2007. All Rights Reserved.

Copy To—Copies the selected folder and contents to another location.

Move To—Moves the selected folder and contents to another location.

Delete—Deletes the selected folder and its contents.

Rename—Used to rename the selected folder.

New Sub-folder—Adds a sub-folder to selected folder.

Describe—Used to edit the folder's description. This description is then displayed in the File list's Description column.

Add to Favorites (on page 302)—Adds the selected folder path to your Favorites list.

Properties—Opens the Properties dialog for the selected drive or folder, and is used to modify those properties.

Favorites Panel

Favorites panel > Right-click file

A menu appears when you right-click a file in the Favorites panel. Many of the commands are common to the Folders panel right-click menus (on page 402). Additionally, many commands use standard Windows conventions and as such, are not described in detail.

Here, we describe the commands specific to the Favorites panel.

Interface

Open—Opens the selected file in the viewport.

Copy Location—Copies the full path name of the selected folder to the clipboard. You can then paste it to another location.

Copy To—Copies the selected folder and contents to another location.

Move To—Moves the selected folder and contents to another location.

Describe—Used to edit the folder's description. This description is then displayed in the File list's Description column.

Add to Favorites (on page 302)—Adds the selected folder path to your Favorites list.

Import Options (on page 40)—Used to modify and apply import properties, if any, to the format type. These options differ depending on the selected format, and many are common between the formats.

Copyright © Right Hemisphere 2007. All Rights Reserved.

Gateway Panel Menus

Gateway panel > Assemblies tab > Right-click nodes
Gateway panel > Asset tab > Right-click nodes

Various context-sensitive right-click menus are available when you right-click in the Gateway panel (on page 307), with which you can perform a variety of functions.

The menus that appear depend on the location of your cursor within the panels' tabs. For example, if you right-click a server node in the Assemblies panel, you can remove or log out of the server, and upload assemblies. If you right-click an item node in the Assemblies and Assets panels, you can download subgroup files that correspond to that item.

Note that a right-click menu appears when you right-click over an empty area in the panel, as described below.

Interface

Refresh—Refreshes the panel display. This command is only displayed when a server has been added to Gateway.

Add Server (on page 207)—Used to add a server to Gateway.

Preferences (on page 218)—Used to manage server and file settings. For example, the location of temporary files, and the number of passwords entered when logging onto the server.

Add Deep Server Dialog

Gateway panel > Right-click > Add Server

The Add Deep Server dialog is used to add new servers to Gateway by typing or selecting a URL that corresponds to the name of the server. Once Gateway validates the URL, it gets stored in a local file and is displayed in the Gateway panel.

Procedure

To open the Add Deep Server dialog:

1. Right-click an empty area on the Gateway panel.
2. Select **Add Server**.

Interface

Name—The name that you assign to the Deep Server to which you are connecting.

Address—The location of the Deep Server to which you want to connect. For example, http://[server name]/DeepServerWebApi.

OK—Closes the dialog, and applies the settings. Any changes are saved.

Cancel—Cancels the process and closes the dialog. Any changes made to the settings are lost.

Help—Opens the relevant Help topic.

Copyright © Right Hemisphere 2007. All Rights Reserved.

Preferences Dialog

Gateway panel > Right-click > Preferences

The Preferences dialog is used to modify various settings (on page 218), including settings for the management and storage of downloaded files (on page 212), and the Gateway history.

Procedure

To open the Preferences dialog:

1. Right-click an empty area in the Assemblies or Assets tab.
2. Click **Preferences**.

Interface

Temporary Files Cache (on page 212)—Used to modify the settings for the cache into which temporary files are downloaded, and to manage downloaded files.

- **Current location**—Displays the current location of the temporary files cache.
- **Amount of disk space to use**—Determines the size in MB, for the amount of space used to store downloaded files. When the size is exceeded, Deep Server deletes the oldest files first to make room for new files as they are downloaded.
  - **MB**—The maximum size of the temporary files cache.
- **Days to keep files**—Determines the number of days that temporary files are kept before they are deleted. Note that Deep Server begins to delete the files if the size of the cache is reached before this time is exceeded.
- **Delete files on exit**—Deletes all temporary files when you exit Gateway.
- **Change Folder**—Used to change the location of the temporary files cache. By default, this is the 'My Documents\My 3D Models\Gateway' folder. Note that when you change this location, any files that were downloaded previously are deleted.
- **View Files**—Used to display all the temporary files stored in the cache for the current session.
- **Delete Files**—Used to delete all temporary files.

History—Used to modify the server history settings.

- **Remember servers visited** (on page 207)—Directs Deep Server to remember the server locations that were added from previous sessions.
- **Remember passwords entered** (on page 207)—Directs Deep Server to store and encrypt passwords that were used in previous sessions, and to store them in the computer registry (on page 30).

Download (on page 212)—Used to modify the settings for the downloaded files.

- **Number of threads for downloading files simultaneously**—Determines the number of concurrent downloads that Deep Server performs when downloading files.

OK—Closes the dialog and saves the settings.

Cancel—Closes the dialog. Any changes made to the settings are lost.

Apply—Applies the settings.

Help—Opens the relevant Help topic.

Copyright © Right Hemisphere 2007. All Rights Reserved.

Server Node Menu

Right-click server node

The server node menu appears when you right-click a server node. The commands differ depending on the current tab. Many of the commands are common to both the Assemblies and Assets tabs, while others are specific to each. Here we describe all commands across all tabs.

Interface

Expand—Expands the selected node to show all sub-nodes and files.

Collapse—Collapses the selected node to hide all sub-nodes and files.

Remove Server (on page 207)—Removes the selected server from Gateway.

Log Out (on page 207)—Logs out of the selected server.

Refresh (on page 218)—Refreshes the panel display. This command is only displayed when a server has been added to Gateway.

Rename (on page 207)—Used to modify the name of the selected server.

Add Project (on page 209)—Adds a new project folder to the selected server.

Upload Assembly (on page 210)—Uploads all assembly files for the selected folder to the database.

Upload Assets (on page 209)—Uploads all asset files for the selected folder to the database.

Properties (on page 217)—Displays the properties for the selected server, including the server's location, number of sub-folders, and assembly extension supported. It also displays the current details for the current user.

Add Project Dialog

Gateway panel > Right-click server node > Add Project

The Add Project dialog is used to add new project folders (on page 209) to the server database in which store and manage assets.

Procedure

To open the Add Project dialog:

1. Right-click a server node in the Assets tab.
2. Click **Add Project**.

Interface

Name—The name if the new project.

Description—The description of the project.

OK—Creates the project and closes the dialog.

Cancel—Cancels the process and closes the dialog. Any changes made to the settings are lost.

Help—Opens the relevant Help topic.

Copyright © Right Hemisphere 2007. All Rights Reserved.

Upload Assets Dialog

Gateway panel > Assets tab > Right-click server or folder node > Upload Assets

The Upload Assets dialog is used to upload single assets (on page 209) to the selected server's database.

Procedure

To open the Upload Assets dialog:

1. Right-click a server or folder node in the Assets tab.
2. Click **Upload Assets**.

Interface

Add Asset—Used to navigate to, and select the assets that you want to upload.

Remove—Removes the selected assets from the asset window.

Upload—Uploads the assets to the selected server's database.

Added files window—Displays all the assets that will be uploaded.

Abort—Cancels the update process.

Project—Used to select a project in which to group the assets.

Method—Used to select and run a default set of processes that create and render the assets' derivatives.

Category—The category into which derivatives and links are downloaded.

Metadata—The keywords on which you can search for the assets.

Upload Assembly Dialog

Gateway panel > Assemblies tab > Right-click server or folder node > Upload Assembly

The Upload Assembly dialog is used to upload assemblies (on page 210) to the selected server's database.

Procedure

To open the Upload Assembly dialog:

1. Right-click a server or folder node in the Assemblies tab.
2. Click **Upload Assembly**.

Interface

Folder—The folder that contains the assembly files that will be uploaded.

Browse—Used to navigate to and select the assembly files that you want to upload.

Copyright © Right Hemisphere 2007. All Rights Reserved.

Assembly files—Used to add the 2D extensions for which Deep Server searches for those files types. For example, jpg, gif.

Assembly files window—Displays all the files in the selected folder.

Select all—Selects all files in the workspace list.

Add—Adds the selected files to the upload window.

Remove—Removes the selected assembly files from the added files window.

Remove All—Removes all assembly files from the added files window.

Added files window—Displays all the assembly files that will be uploaded.

Top Level—Sets the selected file as the 'main' file used to determine the arrangement of the part files to create the assembly.

Project—Used to select a project in which to group the assembly.

Method—Used to select and run a default set of processes that create and render the assemblies' derivatives.

Category—The category into which derivatives and links are downloaded.

Metadata—The keywords on which you can search for the assembly files.

Referencing—References all assembly files to their original location instead of packed in .zip file, eliminating the need to archive, copy, and unzip large amounts of data to the share folder.

Build assembly—Builds an .rh file assembly when the files are uploaded. Otherwise, all the files are uploaded without the .rh file being built.

Upload—Uploads the assembly files to Deep Server for processing.

Gateway Properties Dialog

Gateway panel > Assembly/Asset tab > Right-click node > Properties

The Gateway Properties dialog is used to view properties (on page 217) of any node displayed in the Gateway panel, and to modify the server node properties (on page 217).

Procedure

To open the Gateway Properties dialog:

1. Right-click the node for which you want to view the properties in the Assemblies or Assets tab.
2. Click **Properties**.

General Tab

Gateway panel > Assembly/Asset tab > Right-click node > Properties > General

Using the General tab, you can view various properties for the selected node. You can also modify many properties for selected servers including the server name, description, and security certificate settings.

The options differ depending on the current node. Many are common to all nodes, while others are specific to each. Here we describe all options across all nodes.

Copyright © Right Hemisphere 2007. All Rights Reserved.

Interface

Name field—The name of the node. If viewing the server node properties, this field can be used to edit server's name.

Type—The node type. For example, a Deep Server, assembly, project, folder, or associated file node.

Location—The node location.

Contains—The contents of the node. For example, projects within a server node, or sub-assemblies, and parts within an assembly node.

Node details—Various properties are displayed for the selected node. For example, the category, metadata, and version are displayed for assembly nodes.

Processing Methods—Displays the supported processing methods for the selected server. This property is only displayed for server nodes.

Asset extensions supported—The 3D asset formats that are supported by the selected server. For example, .rh and .dwg. This property is only displayed for server nodes.

Assembly extensions supported—The 3D assembly formats that are supported by the selected server. For example, .asm and .catproduct. This property is only displayed for server nodes.

Security Certificate—Used to view and edit the selected server's security certificate information and settings. This button is only displayed for server nodes.

OK—Applies the settings and closes the dialog. Any changes made to the settings are saved.

Cancel—Closes the dialog. Any changes made to the settings are lost.

Help—Opens the relevant Help topic.

User Details

Gateway panel > Assembly/Asset tab > Right-click server node > Properties > User Details

Using the User Details tab, you can view various properties for the selected server. You can also modify many of the properties including the server name, description, and security certificate settings.

Interface

User name—The user name used to log in to the selected server.

Full name—The full name associated with the user name.

E-mail—The email address associated with the user name.

Role—The user privileges associated with the user name.

Change Password—Used to edit the server's existing password.

- **Old Password**—The current password used to access the server.
- **New Password**—The new password that will be used to access the server.
- **Confirm New Password**—The new password as entered in the New Password field.

OK—Applies the settings and closes the dialog. Any changes made to the settings are saved.

Cancel—Closes the dialog. Any changes made to the settings are lost.

Help—Opens the relevant Help topic.

Copyright © Right Hemisphere 2007. All Rights Reserved.

Folder Node Menu

Right-click folder node

The folder node menu appears when you right-click a folder node. The commands differ depending on the current tab. Many of the commands are common to both the Assemblies and Assets tabs, while others are specific to each. Here we discuss all commands across all tabs.

Note that the folders displayed in the Gateway panel can be a project added to Gateway (on page 209), a category defined in Gateway (on page 209), or a project or category created in Deep Server Web. Please see your Systems Administrator for further information for information on Deep Server Web.

Interface

Expand—Expands the selected node to show all sub-nodes and files.

Collapse—Collapses the selected node to hide all sub-nodes and files.

Download All Subgroups (on page 212)—Downloads all .rh derivatives that relate to the selected folder's child nodes or assets. Note that .rh derivatives relating to any nested nodes or assets of the folder are not downloaded.

Refresh (on page 218)—Refreshes the panel display.

Upload Assembly (on page 210)—Uploads all assembly files for the selected folder to the database.

Upload Assets (on page 209)—Uploads all asset files for the selected folder to the database.

Properties (on page 217)—Displays the properties for the selected folder, including the folder type, location, and number of sub-folders.

Asset and Item Node Menu

Right-click asset/item node

The asset and item node menu appears when you right-click an asset, assembly, or derivative node. The commands differ depending on the current tab, the node type, and the current status of the node. That is, whether the base derivative or subgroups have been downloaded, etc.

Many of the commands are common to both the Assemblies and Assets tabs, while others are specific to each. Here we discuss all commands across all tabs.

Interface

Expand—Expands the selected node to show all sub-nodes and files.

Collapse—Collapses the selected node to hide all sub-nodes and files.

Download Asset (on page 212)—Downloads the selected asset to the temporary files cache, and display it in the viewport.

Download Derivative (on page 212)—Downloads the base derivative (on page 205) of the selected node to the temporary files cache, and display it in the viewport.

Download Derivative as Link (on page 212)—Downloads the link of the selected derivative to the temporary files cache.

Copyright © Right Hemisphere 2007. All Rights Reserved.

Remove Derivative from Cache (on page 217)—Removes the selected derivative from the temporary files cache.

Remove Asset from Cache (on page 217)—Removes the selected asset from the temporary files cache.

Download All Derivatives (on page 212)—Downloads all derivatives of the selected item's child nodes or assets to the temporary files cache, and displays the selected derivative in the viewport.

Download All Subgroups (on page 212)—Downloads all base derivatives that relate to the selected item's child nodes or assets. Note that base derivatives relating to any nested nodes or assets of the item are not downloaded.

Refresh (on page 218)—Refreshes the panel display.

Delete Assembly from Server (on page 217)—Deletes the selected assembly from the server.

Upload Assembly (on page 210)—Uploads all assembly files for the selected item to the database.

Upload Assets (on page 209)—Uploads all asset files for the selected item to the database.

Upload Associated Files (on page 215)—Adds associated files to the selected asset.

Upload Scene as Associated File (on page 215)—Saves the current scene as an associated file to the selected assembly or asset.

Update Asset (on page 216)—Updates the selected asset and all the asset's derivatives.

Properties (on page 217)—Displays the properties for the selected item, including the folder type, location, and number of associated files.

Upload Associated Files Dialog

Gateway panel > Assemblies/Assets tab > Right-click asset or item > Upload Associated Files
Gateway panel > Assemblies/Assets tab > Right-click asset or item > Upload Scene as Associated File

The Upload Associated Files dialog is used to associate files with assets (on page 215) and then upload them. Associated files can be any type of file. For example, a Microsoft Word document. They can also be the scene that is currently displayed in the Deep Exploration viewport.

Note: You cannot search for associated files directly; you must first search for the asset and then look under the Associated Files tab.

Procedure

1. Right-click the asset or item node in the Assemblies or Assets tab.
2. Do one of the following:
   - Click **Upload Associated Files**.
   - Click **Upload Scene as Associated File**, enter a name for the new file, and click **OK**.

Interface

Add Asset—Used to select the assets for which you want to associate a file.

Remove—Removes the selected assets from the asset window.

Upload—Uploads the assets to Deep Server for processing.

Added files window—Displays all the assets that have been added for uploading.

Copyright © Right Hemisphere 2007. All Rights Reserved.

Abort—Cancels the associated files process.

Update Asset Dialog

Gateway panel > Assemblies tab > Right-click asset or item > Update Asset
Gateway panel > Assets tab > Right-click asset > Update Asset

The Update Asset dialog is used to update assets (on page 216) and all their derivatives if the asset has been modified. Note that you can only update single assets, not assembly or part files.

Procedure

To open the Update Asset dialog:

1. Right-click the asset or item node in the Assemblies or Assets tab.
2. Click **Update Asset**.

Interface

Add Asset—Used to navigate to and select the assets that you want to update.

Remove—Removes the selected assets from the asset window.

Update—Updates the selected asset and all its derivatives.

Added files window—Displays all the assets that will be updated.

Abort—Cancels the update process.

History List Menus

History list > Right-click file

A menu appears when you right-click a file in the History list. Many of the commands are common to the Folders panel right-click menus (on page 402). Additionally, many commands use standard Windows conventions and as such, are not described in detail.

Here, we describe the commands specific to the History list.

Interface

Import Options (on page 40)—Used to modify and apply import properties, if any, to the format type. These options differ depending on the selected format, and many are common between the formats.

Information Bar Menu

Right-click in Information bar

A menu appears when you right-click in the Information bar and is used to display the bar in one of two different views.

Interface

Compact View—Displays the bar at a reduced size; without the file icon and with a smaller file name. This is helpful when you need more space to display files on your monitor.

Copyright © Right Hemisphere 2007. All Rights Reserved.

Classic View—Displays the bar in the regular view; with the file icon and a large file name.

Menu Bar Menu

Right-click menu bar

A right-click menu is available when you right-click Deep Exploration's menu bar. It can be used to view and change the display of the application interface by displaying controls and toolbars. It is also used to access the Customize Layout dialog.

All the commands are available on the View menu and as such are described in the View Menu (on page 255) section.

Model Views Panel Menu

Model Views panel > Right-click model view

The Model Views panel menu contains a number of commands used to control the model views.

Interface

Sort—Used to arrange views in the Model Views panel list.

- **By Name—**Arranges views by name in ascending or descending order depending on your selection.
- **By Creation Time—**Arranges views by time in ascending or descending order depending on your selection.
- **Ascending—**Arranges views in ascending order by name or time depending on your selection.
- **Descending—**Arranges views in descending order by name or time depending on your selection.

Activate (on page 77)**—**Activates the selected view in the selected viewport.

Delete (on page 77)**—**Deletes the selected view.

Update Model View (on page 77)—Updates the selected model view with the current render and viewport settings.

Properties (on page 327)—Opens the Model View Properties dialog and is used to modify the selected view's properties.

Scene Components Panel Menus

Certain context menus are available when you right-click within the Scene Components panel. The available commands depend on the component of the panel you are viewing. For example, the Scene tree or Materials list. They also depend on your current selection within each component.

For example, if you have an object selected in the 3D Objects list, object selection commands are available. However, if you have a material selected, material commands are available.

Copyright © Right Hemisphere 2007. All Rights Reserved.

Scene Tree Menus

Scene Components panel > Scene tree

The Scene tree comprises the 3D Objects list and the Materials folder. Various right-click menus are available from within the tree depending on the hierarchy node over which the cursor is located:

- Commands relating to the scene and the scene objects are displayed when you right-click over the 3D Objects list node or the object nodes.
- Commands relating to the scene's materials are displayed when you right-click over the Materials folder node or the material nodes.

3D Objects List Menu

Scene Components panel > Scene tree > 3D Objects list > Right-click object
Scene Components panel > Scene tree > 3D Objects list > Right-click no selection

The 3D Objects list menu contains numerous commands. Certain commands are only available if one or more objects are selected, or if the object is a group or belongs to a group.

Interface

Tools (on page 396)—Used to perform a number of functions including moving pivot points and removing duplicated elements.

Activate Camera (on page 262)—Displays the scene through the selected camera.

Rename—Used to rename the selected object.

Select All—Selects all objects in the scene.

Invert Selection—Inverts the current selection.

Select Sub-Objects—Selects all sub-objects of the selected object.

Note: You can also use various keyboard shortcuts (on page 433) to select sub-objects and clear sub-objects from selection.

Show All Objects—Displays all objects.

Show Selection—Displays all selected objects.

Hide All Objects—Hides all objects in the scene.

Hide Selection—Hides the selected object.

Hide Unselected—Hides all unselected objects.

Create Group (on page 102)—Creates a group when you have multiple objects selected.

Attach to Group (on page 102)—Attaches the selected objects to an existing group or to create a new group.

Detach from Group (on page 102)—Detaches the selected object from the selected.

Ungroup (on page 102)—Separates the selected group into separate objects.

Delete Objects—Deletes all selected objects.

Scene Properties (on page 333)—Opens the Scene Properties dialog and is used to view and edit the current scene's properties.

Copyright © Right Hemisphere 2007. All Rights Reserved.

Object Properties (on page 335)—Opens the Object Properties dialog and is used to modify the selected objects' properties.

Materials Folder Menus

Scene Components panel > Scene tree > Materials folder > Right-click folder
Scene Components panel > Scene tree > Materials folder > Right-click material

The Materials folder menus contain numerous commands. The available commands differ depending on your selection. That is, whether the Materials folder or an individual material is selected.

Interface

Create Material (on page 106)—Creates a new material. The material is displayed at the end of the list.

Remove Unused Materials—Removes any materials unused in the scene.

Merge Duplicate Materials—Merges all duplicate materials.

Duplicate (on page 106)—Duplicates the selected material.

Delete (on page 106)—Deletes the selected material.

Rename (on page 106)—Used to rename the selected material.

Select Objects (on page 106)—Selects all objects that are associated with the selected material.

Material Properties (on page 350)—Opens the Materials Properties dialog and is used to modify the selected material's properties.

Materials List Menu

Materials list > Right-click material

The Materials panel menu contains a number of commands used to control the scene's materials.

Interface

Create Material (on page 106)**—**Creates a new material. The material is displayed at the end of the list.

Duplicate (on page 106)—Duplicates the selected material.

Delete (on page 106)—Deletes the selected material.

Rename (on page 106)—Used to rename the selected material.

Select Objects (on page 106)—Selects all objects that are associated with the selected material.

Material Properties (on page 350)—Opens the Materials Properties dialog and is used to modify the selected material's properties.

Copyright © Right Hemisphere 2007. All Rights Reserved.

Parts Panel Menu

Scene Components panel > Parts panel > Right-click part

The Parts panel contains a number of commands; the commands differ depending on the current object selection and grouping.

Interface

Tools (on page 396)—Used to perform a number of functions including moving pivot points and removing duplicated elements.

Rename Callout—Used to edit the selected callout's name.

Rename—Used to rename the selected object.

Select All—Selects all objects in the scene.

Select None—Selects no objects in the scene.

Select Same Level Objects (on page 169)**—**Selects all objects that are on the same hierarchy level. This is helpful when creating layers that you want to be made from objects that are at the same hierarchy level.

Deselect Same Level Objects (on page 169)—Clears all objects that are on the same hierarchy level from selection.

Invert Selection—Inverts the current selection.

Select Sub-Objects—Selects all sub-objects of the selected object.

Note: You can also use various keyboard shortcuts (on page 433) to select sub-objects and clear sub-objects from selection.

Show All Objects—Displays all objects.

Show Selection—Displays all selected objects.

Hide All Objects—Hides all objects in the scene.

Hide Selection—Hides the selected object.

Hide Unselected—Hides all unselected objects.

Create Group (on page 102)—Creates a group when you have multiple objects selected.

Attach to Group (on page 102)—Attaches the selected objects to an existing group or to create a new group.

Detach from Group (on page 102)—Detaches the selected object from the selected.

Ungroup (on page 102)—Separates the selected group into separate objects.

Modifier—Select a modifier to associate with the part.

Delete Objects—Deletes all selected objects.

Object Properties (on page 335)—Opens the Object Properties dialog and is used to modify the selected objects' properties.

Copyright © Right Hemisphere 2007. All Rights Reserved.

Animation Tree Menu

Scene Components panel > Animation tree > Right-click sequence
Scene Components panel > Animation tree > Right-click object

The Animation tree menu contains a number of commands; the commands differ depending on the current object selection and grouping.

Various right-click menus are available from within the Animation tree. For example, if you right-click a sequence name you can duplicate the sequence, and if you right-click an object name you can

display the object's properties, and add new tracks.

Some of the commands are common to both menus. Here we discuss all commands across all the animation timeline right-click menus.

Interface

Right-click sequence—Used to perform various functions for the selected sequence.

- **All Sequences to Start**—Moves all sequences to their first frame.
- **All Sequences to End**—Moves all sequences to their last frame.
- **Activate**—Activates the selected sequence.
- **Create Sequence**—Creates a new empty sequence.
- **Create Snapshot**—Creates a single frame sequence based on the currently selected sequence. When objects are activated, they have the same position as at the time of creating the sequence.
- **Delete**—Deletes the selected sequence.
- **Duplicate**—Duplicates the selected sequence.
- **Reverse**—Reverses the sequences of the animation so that the first sequence becomes the last, and the last becomes the first.
- **Rescale** (on page 418)—Opens the Rescale Animation dialog and is used to rescale the animation.
- **Properties** (on page 317)—Opens the Sequence Properties dialog and is used to modify the selected sequence's properties.

Right-click object—Used to perform various functions for the selected object.

- **Tools** (on page 396)—Used to perform a number of functions including moving pivot points and removing duplicated elements.
- **Select All—**Selects all objects in the scene.
- **Select Same Level Objects** (on page 169)**—**Selects all objects that are on the same hierarchy level. This is helpful when creating layers that you want to be made from objects that are at the same hierarchy level.
- **Deselect Same Level Objects** (on page 169)—Clears all objects that are on the same hierarchy level from selection.
- **Invert Selection—**Inverts the current selection.
- **Select Sub-Objects**—Selects all sub-objects of the selected object.

  Note: You can also use various keyboard shortcuts to select sub-objects and clear sub-objects from selection.

- **Show All Objects—**Displays all objects.
- **Show Selection**—Displays all selected objects.
- **Hide All Objects**—Hides all objects in the scene.
- **Hide Selection—**Hides the selected object.

Copyright © Right Hemisphere 2007. All Rights Reserved.

- **Hide Unselected**—Hides all unselected objects.
- **Create Group** (on page 102)—Creates a group when you have multiple objects selected.
- **Attach to Group** (on page 102)**—**Attaches the selected objects to an existing group or to create a new group.
- **Detach from Group** (on page 102)**—**Detaches the selected object from the selected.
- **Ungroup** (on page 102)—Separates the selected group into separate objects.
- **Delete Objects**—Deletes all selected objects.
- **Object Properties** (on page 335)—Opens the Object Properties dialog and is used to modify the selected objects' properties.

Rescale Animation Dialog

Right-click sequence in Animation tree > Rescale

Animations can be rescaled using the Rescale Animation dialog.

Procedure

To open the Rescale Animation dialog:

1. Right-click the default sequence of the animation you want to rescale in the Animation tree.
2. Click Rescale.

Interface

Rescale—used to rescale the animation by the selected method.

- **Offset by**—Offsets the animation by the selected number of seconds.
- **Scale by**—Scales the animation by the specified percent.
- **Set**—Used to set the length of the animation.
  - **Start**—Determines the beginning offset of the animation.
  - **End**—Determines the end seconds of the animation.

OK—Closes the dialog and applies the settings. Any changes made to the settings are saved.

Cancel—Closes the dialog. Any changes made to the settings are lost.

Help—Opens the relevant Help topic.

Copyright © Right Hemisphere 2007. All Rights Reserved.

Layers Panel Menu

Scene Components panel > Layers > Right-click viewport

The Layers panel menu contains a number of commands used to control the layers and the objects within the layers. Available options differ depending on the current layer or object selection and grouping.

Interface

Tools (on page 396)—Used to perform a number of functions including moving pivot points and removing duplicated elements.

View to Active Object—Zooms the current view to the active object.

View to All Objects—Zooms the current view to the whole model.

Standard View—Zooms the model to a standard projection.

Select All—Selects all objects in the scene.

Select None—Selects no objects in the scene.

Select Same Level Objects—Selects all objects in the same level.

Deselect Same Level Objects—Deselects all objects in the same level.

Select Sub-Objects—Selects all sub-objects of the selected object.

Note: You can also use various keyboard shortcuts (on page 433) to select sub-objects and clear sub-objects from selection.

Invert Selection—Inverts the current selection.

Hide All Objects—Hides all objects in the scene.

Hide Selection—Hides the selected object.

Hide Unselected—Hides all unselected objects.

Create Group—Creates a group of the selected objects or nodes.

Attach to Group—Attaches selected objects to a group:

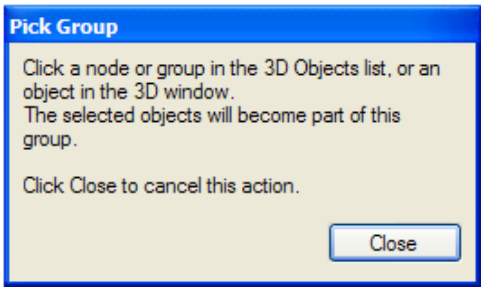

Ungroup—Ungroups all selected objects.

Duplicate—Duplicates the selected layer and all the objects within the layer.

Modifier—Select a modifier to associate with the part.

Delete Objects—Deletes all selected objects.

Object Properties (on page 335)—Opens the Object Properties dialog and is used to modify the selected objects' properties.

Copyright © Right Hemisphere 2007. All Rights Reserved.

Layer Properties Dialog

Layers panel > Right-click layer > Properties
Double-click layer in Layers panel

The Layer Properties dialog is used to modify layer properties including the layer name and and associated comments.

Interface

Name—Used to edit the layer's name.

Description—Used to edit the layer's description.

OK—Closes the dialog. Any changes made to the settings are saved.

Cancel—Closes the dialog. Any changes made to the settings are lost.

Apply—Applies the new settings and leaves the dialog open.

Help—Opens the relevant Help topic.

Steps Panel Menu

Steps panel > Right-click step

The Steps panel menu contains a number of commands used to control the steps including viewing, arranging, activating, and renaming steps, and updating the step thumbnails.

Note that the thumbnail that is displayed for each step is the last frame of the last animation defined in the sequence list for the step.

Interface

Sort—Used to arrange steps in the Steps panel list.

- **By Name—**Arranges steps by name in ascending or descending order depending on your selection.
- **By Creation Time—**Arranges steps by time in ascending or descending order depending on your selection.
- **Ascending—**Arranges steps in ascending order by name or time depending on your selection.
- **Descending—**Arranges steps in descending order by name or time depending on your selection.

Play—Plays the selected step in the selected viewport.

Delete—Deletes the selected step.

Update Step—Updates the selected step with the current render and viewport settings.

Properties (on page 361)—Opens the Step Properties dialog and is used to modify the selected step's properties.

Copyright © Right Hemisphere 2007. All Rights Reserved.

Status Bar

Menu bar > View > Status Bar

The status bar is located at the very bottom of the Deep Exploration interface. It displays various information including:

- The time taken to refresh the scene (on page 255) in frames per second (FPS).
- A message icon if there are status, warning, or error messages (on page 256) relating to the current file.
- A textures icon if textures have been applied to any materials.
- The name of the current display renderer (on page 259).

Other information is also displayed depending on the viewport selection. For example, if no objects are selected, the time taken to open the file is displayed. If an object is selected, the number of polygons and vertices of that object are displayed.

You can display message details via the message icon, and you can select other display renderers via the display renderer icon.

Interface



Status bar with no viewport selection
A: File loading time
B: Viewport refresh rate
C: Message icon
D: Textures icon
E: Display renderer icon

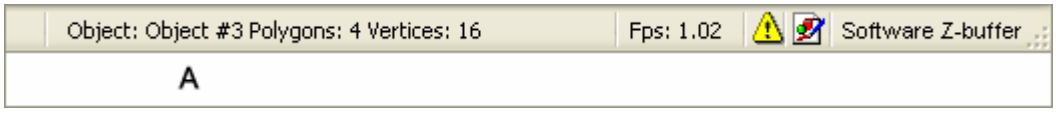

Status bar with object selected
A: Name and properties of selected object

Copyright © Right Hemisphere 2007. All Rights Reserved.

Customizing the User Interface

You can rearrange the components of the user interface. Components can be resized, moved, floated, docked, and closed to place the most frequently used components close to hand, similar to the functionality in most Windows applications.

You can also customize the display of toolbars and customize the colors used in the scene display.

Customization of the user interface can help to maximize the work-space for greater productivity, and to establish your corporate usage standards and the 'look and feel' of the application.

The 'customize' functionality includes:

- Viewports (on page 63) can be resized.
- The Explorer bar (on page 300) can be resized horizontally.
- The menu bar (on page 248) and toolbars (on page 363) can be docked at the top, bottom, left, or right of the viewports.
- Controls (on page 313) can be docked at the top or bottom of the viewports.
- Customizing toolbar button display; using the vertical 'move' bars to the right of the toolbars, you can display only the tools you need.
- Controls and toolbars can be displayed automatically when a file is opened if the component relates to the file's structure. For example, if you have a model view saved in a .rh file and the Model Views control is set to Automatic, the Model Views panel displays when you load the file.
- Various panels including the Information bar, Scene tree, and Display Settings can be docked at the top, bottom, left, or right of the viewports.
- Setting components to display automatically if a file includes functionality that relates to the component. For example, if a file includes animation and the Animation Timeline control is set to automatic, the timeline is displayed when the file is opened.
- Customizing menu commands, toolbars, ScreenTips, and shortcut keys. These procedures are identical to Windows functionality and as such, are not described here.

Note that many 'customize' conventions are identical to Windows functionality and as such, are not described here.

Copyright © Right Hemisphere 2007. All Rights Reserved.

Displaying and Hiding Components

Menu bar > View > Click component
Right-click menu bar > Click component
Customize Layout dialog > Select component check box
Customize Layout dialog > Double-click component column
Toolbar vertical customize bar arrow > Add or Remove Buttons > Standard

You can customize the display of components by hiding those components you do not want to see in the user interface, either automatically or manually. You can also customize the display of toolbar buttons to display only the tools you need.

Procedures

To display a component, do one of the following:

- Click **View** on the menu bar, and then choose the name of the component that you want to display.
- Right-click the menu bar and click the name of the component that you want to display.
- Open the Customize Layout dialog (on page 256), select the component's check box on the relevant tab, and then click **OK**.

Note: The Animation Timeline (on page 318) can also be displayed by clicking the Edit Keyframes button  wherever it is displayed. The audio and video controls are automatically displayed when a file of that type is opened.

To set components to display automatically:

1. Open the Customize Layout dialog.
2. Double-click in the 'Type' column of the component'.
3. Ensure the type is set to 'Automatic' and then click **OK**.

To close a component, do one of the following:

- Click **View** on the menu bar, and then choose the name of the component that you want to close.
- Right-click the menu bar and click the name of the component that you want to close.
- Open the Customize Layout dialog, clear the component's check box on the relevant tab, and then click **OK**.
- Click **Close**  in the top, right corner of the component.

To customize toolbar buttons:

1. Click the toolbar's vertical customize bar arrow .
2. Choose **Add or Remove Buttons > Standard**.
3. Do one of the following:
   - Click the name of the button you want to remove or add.
   - Move the buttons to the order you want.
   - Click **Reset Toolbar** to restore the toolbar to its original layout.

Copyright © Right Hemisphere 2007. All Rights Reserved.

Resizing Components

Drag component edges
Drag viewport edges
Menu bar > Views > Viewports > Select layout

You can resize the components of the user interface; viewports (on page 63) can be resized, and the Explorer bar can be resized horizontally. Toolbars are minimized automatically when the application interface is minimized. When a toolbar is minimized, certain tools may be hidden from view and the vertical customize bar displays a double arrow . Clicking these arrows displays the hidden tools.

When more than one viewport is displayed, you can dynamically adjust the viewport windows' proportions. Note that this feature does not allow you to define new layouts.

Procedures

To resize a floating component vertically:

1. Move the cursor over the top or bottom edge of the component. The cursor changes to a double arrow.
2. Drag the cursor to increase or decrease the height of the component.

To resize a floating component horizontally:

1. Move the cursor over the left or right edge of the component. The cursor changes to a double arrow.
2. Drag the cursor to increase or decrease the width of the component.

To resize a docked component horizontally:

1. Move the cursor over the right edge of the component. The cursor changes to a double arrow.
2. Drag the cursor to increase or decrease the width of the component.

To resize component both vertically and horizontally:

1. Move the cursor over the intersection of the components. The cursor changes to a crossed arrow.
2. Drag the cursor to increase and decrease the height and width of the components.

To resize the viewport windows:

1. Move the cursor over the top, bottom, left, or right edge of a viewport. The cursor changes to a double arrow.
2. Drag the cursor to increase or decrease the width or height of the viewport. All viewport windows are resized.

To reset the viewport windows to the default layout:

Choose **Views > Viewports** on the menu bar and then select the layout again.

Copyright © Right Hemisphere 2007. All Rights Reserved.

Docking and Floating Components

Components can be floated and docked to place the most frequently used components close to hand. The menu bar and toolbars can be docked at the top, bottom, left, or right of the viewports. Controls can be docked at the top or bottom of the viewports. Various panels including the Information bar, Scene tree, and Display Settings can be docked at the top, bottom, left, or right of the viewports.

When docking components, the component docks immediately once a 'dockable' location becomes available and you can then either leave it in that location or move it to another. Docked components are displayed with a vertical 'move' bar to the left of the component. Floating components are displayed with a title bar and can be dynamically resized. The examples below shows the Standard toolbar as it may be seen docked and then floating over the viewport.



Standard toolbar: docked / floating

Procedures

To float a component, do one of the following:

- Drag the component by it's 'move' bar  to the floating location you want.
- Double-click the floating component's title bar. The component is moved to its previous floating location.

Note: When you move a docked component, the location and size of other components can change. Pressing CTRL while moving a floating component causes that component to remain floating and not become docked.

To dock a component, do one of the following:

- Drag the component by it's title bar to the dockable location you want.
- Double-click docked component 's title bar. The component is moved to its previous docked location.

Copyright © Right Hemisphere 2007. All Rights Reserved.

External Application Plugins

Certain plugins must be installed to enable you to work with external application file formats. For example, you must install the 3ds Max DCOM plugin to work with .max files.

This section describes all the information you need to install any external application plugins that may be required when working with particular file formats.

Note: Please note that in order to work with certain other file formats, the related external application must be installed. For example, you must install 3ds Max to work with .max files. Further information on file formats is available from the supported file format appendices.

Copyright © Right Hemisphere 2007. All Rights Reserved.

3ds Max DCOM Plugin

Support for .max files is based on Discreet's 3ds Max DCOM technology. This requires the 3ds Max DCOM plugin to be able to 'call' a local or remote instance of 3ds Max and open .max files.

DCOM stands for Distributed Component Object Model, an extension of the Component Object Model (COM) that allows COM components to communicate across network boundaries. Traditional COM components can only perform interprocess communication across process boundaries on the same computer. DCOM uses the RPC mechanism to transparently send and receive information between COM components (that is, clients and servers) on the same network. DCOM was first made available in 1995 with the initial release of Windows NT4.

DCOM serves the same purpose as IBM's DCOM protocol, which is the most popular implementation of CORBA. Unlike CORBA, which runs on many operating systems, DCOM is currently implemented only for Windows.

If you try to open a .max file and the plugin is not yet installed, you are advised of this and you can choose to install the plugin either automatically or manually. We recommend installing the plugin automatically. After the plugin is installed, you are able to work with .max files (on page 501).

Procedures

To install the plugin automatically:

1. Click a .max file in Deep Exploration. You are advised that the plugin is not installed.
2. Click **OK**. The 3ds Max DCOM Plugin Installation dialog is displayed.
3. Click **Browse**, navigate to and select the path to the 3ds Max executable folder that you require. For example, C:\3dsmax7.
4. Click **OK**.
5. Do one of the following:
   - Ensure the Local instance option is selected if you are installing to a local instance of 3ds Max.
   - Select the Remote instance option and enter the server name on which 3ds Max is installed, if you are installing to a remote instance of 3ds Max.
6. Click **Automatic**. An instance of 3ds Max is opened, the plugin is registered, and then 3ds Max closes.

   Note: If you are installing the plugin for 3ds Max version 6 or later, an error message is displayed. This is normal and is part of the procedure.
7. Do one of the following:
   - Click **Don't Send** and then click **OK** if you are using 3ds Max version 6 or later.
   - Click **OK** if you are using 3ds Max version 5 and earlier.
   - Click **OK** if you are using 3ds Max version 8 to close the Deep Exploration warning dialog.

The .max file opens and the 3ds Max instance runs in the background of Deep Exploration.

To install the plugin manually:

1. Click a .max file in Deep Exploration. You are advised that the plugin is not installed.
2. Click **OK**. The 3ds Max DCOM Plugin Installation dialog is displayed.
3. Select the 'Install manually' check box.
4. Click **Manual**.

Copyright © Right Hemisphere 2007. All Rights Reserved.

5. Ensure Deep Exploration is closed.
6. Navigate to C:\Program Files\Right Hemisphere\Deep Exploration\plugins.
7. Delete the $cache$.p file.
8. Do one of the following:
   - If you are installing the plugin for 3ds Max 5 or earlier, copy the 3de_srv.gup file from Deep Exploration's plugins folder to the 3ds Max plugins folder.
   - If you are installing the plugin for 3ds Max 6 or later, copy the 3de_srv.gup6 file from Deep Exploration's plugins folder to the 3ds Max plugins folder and rename the file to 3de_srv.gup.
9. Start 3ds Max.
10. Open the Utility Panel and click the **More** button.
11. Click **COM / DCOM Server Control** and then click **OK**.
12. Do one of the following:
    - Click **Register** if the command panel displays a Register button.
    - Click **Close** if the command panel displays an Unregister button.

3ds Max should now be registered as a DCOM server and an instance can be used from Deep Exploration.

13. Start Deep Exploration and locate the .max file you want to view.
14. Right-click the .max file and click **Import Options**.
16. Click **Installation Options**.
17. Ensure the correct version and location of 3ds Max is selected in the Import Properties dialog.

Important Note: If you have difficulty with the installation, run the command line: c:\3dsmax7\3dsmax.exe -unregistermax3dx, then re-register as described in step 12.

Copyright © Right Hemisphere 2007. All Rights Reserved.

3ds Max DCOM Plugin Installation Dialog

Click .max file in Deep Exploration > OK

The 3ds Max DCOM plugin is used to install the 3ds Max DCOM plugin to enable you to open .max files.

If you try to open a .max file and the plugin is not yet installed, you are advised of this and you can choose to install the plugin either automatically or manually. We recommend installing the plugin automatically. After the plugin is installed, you are able to work with .max files (on page 501).

Procedure

To open the 3ds Max DCOM Plugin Installation dialog:

Click a .max file in Deep Exploration and then click **OK**.

Interface

Automatic—Used to load the plugin automatically.

- **3ds Max path**—The path to the 3ds Max executable folder that you require. For example, C:\3dsmax7.
- **Browse**—Used to browse for and select the path to the 3ds Max executable folder.
- **Automatic (recommended)**—Initiates the process of loading the plugin automatically.

Manual—Used to load the plugin manually.

- **Install manually**—Used to activate the manual installation options.
- **Manual**—Displays the Help topic that instructs you on loading the plugin manually.

3ds Max Instance—Used to install to a local or remote instance of 3ds Max.

- **Local**—Used to install to a local instance of 3ds Max.
- **Remote**—Used to install to a remote instance of 3ds Max.
- **Server name**—The name of the server where the remote instance of 3ds Max is located.

OK—Closes the dialog and saves the settings.

Cancel—Closes the dialog. Any changes made to the settings are lost.

Help—Opens the relevant Help topic.

Copyright © Right Hemisphere 2007. All Rights Reserved.

Command Line Arguments

Various command line arguments can be used to perform the following operations:

- Start the application and open a specific file.
- Start the application, print a file, and then exit the application.
- Start the application and browse a specific folder.
- Start the application and display a slide show.
- Start the application in the Standard display mode.
- Start the application in the Full-screen display mode.
- Start the application in the View display mode.

Command Line Argument Rules

The following rules apply to command line arguments:

- The correct location of Deep Exploration must always be specified.
- If any file name includes spaces, you must enclose the file path in quotation marks. For example, "C:\My Documents\1.cob".
- If no command line argument is given, the application starts with the 'browse' folder as the folder that was last browsed.

Copyright © Right Hemisphere 2007. All Rights Reserved.

Open a File

You can start Deep Exploration and open a specific file using a simple command line argument. The syntax is:

```
"Deep Exploration.exe" "[directory\file name]"
```

For example, the following argument starts Deep Exploration and opens the file 'image.rh' located in 'C:\My Documents\temp':

```
"C:\Program Files\Right Hemisphere\Deep Exploration\Deep Exploration.exe"
"C:\My Documents\temp\image.rh"
```

Print a File

You can start Deep Exploration, print a file, and then exit the application using a command line argument that includes the '/print' switch. The syntax is:

```
"Deep Exploration.exe" "[directory\file name]" [switch]
```

For example, the following argument starts Deep Exploration, prints the file 'image.rh' located in the 'C:\My Documents\temp' folder, and then exits Deep Exploration:

```
"C:\Program Files\Right Hemisphere\Deep Exploration\Deep Exploration.exe"
"C:\My Documents\temp\image.rh" /print
```

Browse a Folder

You can start Deep Exploration and browse a specific folder using a simple command line argument. The syntax is:

```
"Deep Exploration.exe" "[directory]"
```

For example, the following argument starts Deep Exploration and browses the 'C:\My Documents\temp' folder:

```
"C:\Program Files\Right Hemisphere\Deep Exploration\Deep Exploration.exe"
"C:\My Documents\temp"
```

Display a Slide Show

You can start Deep Exploration and display a slide show using a simple command line argument that includes the '/slideshow' switch. The syntax is:

```
"Deep Exploration.exe" "[directory]" [switch]
```

For example, the following argument starts Deep Exploration and displays the slide show located in the 'C:\My Documents\temp' folder:

```
"C:\Program Files\Right Hemisphere\Deep Exploration\Deep Exploration.exe"
"C:\My Documents" /slideshow
```

Copyright © Right Hemisphere 2007. All Rights Reserved.

Start in Standard Mode

You can start Deep Exploration in the Standard display mode (on page 80) using a simple command line argument that includes the '/browsemode' switch. The syntax is:

```
"Deep Exploration.exe" [switch]
```

For example, the following argument starts Deep Exploration in Standard display mode:

```
"C:\Program Files\Right Hemisphere\Deep Exploration\Deep Exploration.exe"
/browsemode
```

Start in Full-Screen Mode

You can start Deep Exploration in Full-screen display mode (on page 80) using a simple command line argument that includes the '/fullscreen' switch. The syntax is:

```
"Deep Exploration.exe" "[directory]" [switch]
```

For example, the following argument opens Deep Exploration in Full-screen mode with the current directory set to 'C:\Temp':

```
"C:\Program Files\Right Hemisphere\Deep Exploration\Deep Exploration.exe"
"C:\Temp" /fullscreen
```

Start in View Mode

You can start Deep Exploration in View mode using a simple command line argument that includes the '/viewmode' switch. That is, with all folders, panels, and windows hidden. The syntax is:

```
"Deep Exploration.exe" "[switch]"
```

For example, the following argument opens Deep Exploration and hides all folders, panels, and windows:

```
"C:\Program Files\Right Hemisphere\Deep Exploration\Deep Exploration.exe"
/viewmode
```

Copyright © Right Hemisphere 2007. All Rights Reserved.

Keyboard Shortcuts

This section shows the pre-assigned keyboard shortcuts; keyboard alternatives to program functions. It also describes any shortcuts that can be accessed using the mouse buttons.

If a keyboard shortcut is available for a command, it is displayed to the right of the command name on the menu.

Mastery of these shortcuts is the difference between an average user and a 'Power User'. We strongly recommend you practice these shortcuts as they are explained in the tutorials, and wherever possible in your own projects.

Copyright © Right Hemisphere 2007. All Rights Reserved.

2D Navigation Shortcuts

These are the pre-assigned keyboard shortcuts for 2D navigation.

User Interface Function	Keyboard Shortcut
Pan image	Click+drag mouse
Restore to default view	MULTIPLICATION SIGN (*)
Zoom in (magnify image)	PLUS SIGN (+)
Zoom out (reduce image magnification)	MINUS SIGN (-)
Zoom to extents (fit image to viewport/screen)	CTRL+PLUS SIGN (+)

3D Navigation Shortcuts

These are the pre-assigned keyboard shortcuts for 3D navigation.

User Interface Function	Keyboard Shortcut
Roll camera (move camera around viewing axis)	SHIFT+drag
Orbit scene (move camera around focal point)	Drag mouse
Pan scene (rotate camera around vertical axis)	LEFT / RIGHT ARROW
View from different angle (move camera laterally/vertically)	Left+right-click+drag Middle-click+drag
Truck in (move camera into scene to view more closely) Note: The focal point is a fixed distance from the camera.	UP ARROW
Truck out (move camera out from scene to view more distantly) Note: The focal point is a fixed distance from the camera.	DOWN ARROW
Zoom in (narrow the camera angle (FOV) to magnify scene)	Right-click+drag into scene PLUS SIGN (+) IntelliMouse
Zoom out (widen camera angle (FOV) to reduce scene magnification)	Right-click+drag out from scene MINUS SIGN (-) IntelliMouse
Zoom to extents (fit scene to viewport/screen)	CTRL+PLUS SIGN (+)
Restore to default camera view	MULTIPLICATION SIGN (*)

Copyright © Right Hemisphere 2007. All Rights Reserved.

Render Mode Menu Shortcuts

These are the pre-assigned keyboard shortcuts for the Display and Show/Hide menus.

User Interface Function	Keyboard Shortcut
Bounding Box render mode	CTRL+1
Transparent Bounding Box render mode	CTRL+2
Vertices render mode	CTRL+3
Wireframe render mode	CTRL+4
Solid render mode	CTRL+5
Transparent render mode	CTRL+6
Solid Wireframe render mode	CTRL+7
Transparent Wireframe render mode	CTRL+8
Toggle scene bounding box	CTRL+B
Toggle back-facing geometry	CTRL+H
Toggle vertices	CTRL+I
Toggle cameras and lights	ALT+L
Toggle cross section	ALT+X

Copyright © Right Hemisphere 2007. All Rights Reserved.

File Shortcuts

These are the pre-assigned keyboard shortcuts for file procedures.

User Interface Function	Keyboard Shortcut
Add the current file to your favorites list	CTRL+D
Copy a rendered scene to the clipboard as a bitmap	CTRL+SHIFT+C
Copy the selected file	CTRL+C
Clears all files from selection	CTRL+N
Cut the selected file	CTRL+X
Delete the selected file or folder	DELETE
Delete the selected file or folder and bypass the confirmation	CTRL+DELETE
Delete the selected file or folder and bypass the recycle bin	SHIFT+DELETE
Generate thumbnail files for the selected folder	F4
Load a file and open the Import Properties dialog	ALT+click file
Load the next file in the active folder	ALT+RIGHT ARROW
Load the next file and start a slide show	Click file+CTRL+RIGHT ARROW
Load the previous file in the active folder	ALT+LEFT ARROW
Load the previous file and start a slide show	Click file+CTRL+LEFT ARROW
Open the Open dialog	CTRL+O
Open a folder or archive file	Double-click folder or archive file
Paste the selected file	CTRL+V
Refresh the File list display	F5
Reload the current file	CTRL+F5
Reload the current file and open the Import Properties dialog	CTRL+ALT+F5
Rename the selected file or folder	F2
Selects all files	CTRL+A
Stop a slide show	CTRL+LEFT ARROW as slide show in progress ESC as slide show in progress
Update the thumbnail file	CTRL+U

Copyright © Right Hemisphere 2007. All Rights Reserved.

General Shortcuts

These are the pre-assigned keyboard shortcuts for general procedures within the main user interface.

User Interface Function	Keyboard Shortcut
Activate the next window	TAB
Activate the previous window	SHIFT+TAB
Display the User Reference (online Help)	F1
Display right-click menus	Right-mouse click
Toggle between Browse and View modes	ENTER
Toggle Full-screen and Standard display modes	F11
Redo last command that was undone	CTRL+Y
Return to Standard display mode	ESC
Toggles Search panel	CTRL+E
Undo last command	CTRL+Z

Grid Menu Shortcuts

These are the pre-assigned keyboard shortcuts for the Grid menu (on page 260).

User Interface Function	Keyboard Shortcut
Cycle through the grid type display	CTRL+G

Lights Menu Shortcuts

These are the pre-assigned keyboard shortcuts for the Lights menu.

User Interface Function	Keyboard Shortcut
Display lights from file	ALT+0
Display white lights	ALT+1
Display daylight	ALT+2
Display hard lights	ALT+3
Display colored lights red/green	ALT+4
Display colored lights blue/green	ALT+5
Display blue lights	ALT+6
Display marsiano (red) lights	ALT+7
Display single white light from eye	ALT+8
Turn all lights off	ALT+9
Apply more brightness	SHIFT++]
Apply less brightness	SHIFT+- [
Restore original brightness	HOME
Toggle specular lights	ALT+S

Copyright © Right Hemisphere 2007. All Rights Reserved.

Materials Menu Shortcuts

These are the pre-assigned keyboard shortcuts for the Materials menu.

User Interface Function	Keyboard Shortcut
Toggle default material	CTRL+M
Toggle textures	CTRL+T

Object Editing Shortcuts

These are the pre-assigned keyboard shortcuts for object editing procedures.

User Interface Function	Keyboard Shortcut
Copy selected objects using Move tool	Select objects+Move+CTRL+drag
Copy selected objects using Rotate tool	Select objects+Rotate+CTRL+drag
Copy selected objects using Scale tool	Select objects+Scale+CTRL+drag

Scene Components Panel Shortcuts

These are the pre-assigned keyboard shortcuts for the Scene Components panel (on page 329).

User Interface Function	Keyboard Shortcut
Open the Materials Properties dialog	Double-click material in Scene tree
Open the Object Properties dialog for selected object	Double-click object in Scene tree Select object+ALT+ENTER
Toggle selected object and sub-object display	Select object+H
Edit object or material name	Click name of selected object or material in Scene tree F2

Selection Shortcuts

These are the pre-assigned keyboard shortcuts for selection procedures.

User Interface Function	Keyboard Shortcut
Select an object	Click object icon in Scene tree Click object in viewport
Select all sub-objects of the selected object	ALT+click object icon in Scene tree
Clear parent object and all sub-objects from selection	CTRL+ALT+click object icon in Scene tree
Select multiple objects and clear multiple objects from selection	CTRL+click objects in Scene tree CTRL+click objects in viewport
Clear multiple objects from selection	ALT+drag over objects in viewport
Select multiple objects	CTRL+drag over objects in viewport
Select a material	SHIFT+click over objects in viewport
Display object selection commands	CTRL+right-click+drag over objects in viewport
Open Select Objects dialog	F3

Copyright © Right Hemisphere 2007. All Rights Reserved.

Smoothing Menu Shortcuts

These are the pre-assigned keyboard shortcuts for the Smoothing menu.

User Interface Function	Keyboard Shortcut
Toggle smoothing	CTRL+S

Views Menu Shortcuts

These are the pre-assigned keyboard shortcuts for viewports (on page 63).

User Interface Function	Keyboard Shortcut
Orthographic top view	T
Orthographic bottom view	B
Orthographic aft (back) view	A
Orthographic front view	F
Orthographic right view	R
Orthographic left view	L
Perspective view	P
Toggle between single viewport and last multiple viewport display	F12
View to active object	Select object+V
View to visible objects	V

Copyright © Right Hemisphere 2007. All Rights Reserved.

Hints and Tips

This section contains hints and tips on using Deep Exploration.

Copyright © Right Hemisphere 2007. All Rights Reserved.

2D Images

This section contains hints and tips on working with 2D images.

Alpha Channel

- If you do not want an image to display the alpha channel, go to the 2D View tab (on page 281) in the Options dialog and select None in the Grid Size field.
- You can use the Alpha Channel dialog (on page 276) to modify the alpha and RGB channels in 2D images. For example, you can remove or replace the alpha channel, and extract only the alpha or RGB channels.

Copyright © Right Hemisphere 2007. All Rights Reserved.

Compression

This section contains hints and tips on the Deep Exploration compression settings.

File Size

Using the compression settings (vertices, UVs, and normals) of the .rh format version 4.0, the Reduce Models tool (on page 123) (polyreduction), and the Healing tool (on page 127), you are able to reduce the size of files significantly without compromising quality

For best results, we recommend using a combination of polyreduction to approximately 30% of the original, and a high level of UV compression; compressions of 50,50,50 or even 50,20,20 make a significant difference to file size.

For example, we compressed a file that has 110 objects and 287,885 faces using healing, .rh compression settings, and polyreduction with the following results:

Without Textures or UVs (Healing removes UVs)	
Not healed with UV mapping	3,132KB
Healed with compression settings: Lossless compression	1,010KB
Healed with compression settings: 50 50 50 (no noticeable model degradation)	576KB
Healed with compression settings: 20 20 20 (only slight model degradation)	497KB
Healed with compression settings: 20 20 0 at 70% compression (a bit more model degradation)	284KB
Healed with compression settings: 20 0 0 (Normal missing is noticeable)	340KB
Healed and saved in the DE 3.5 compressed format	2,269KB
With UV's	
Healed with compression settings: 50 50 50	1,546KB
Healed with compression settings: 50 20 20	1,232KB
Healed with compression settings: 20 20 20	1,185KB
Healed with compression settings: 50 10 10	1,047KB
With Many Textures (up to 512 X 512)	
Healed with compression settings: 50 10 10 PNG	1,315KB
Healed with compression settings: 50 10 10 JPG at 90% compression	1,301KB
Healed with compression settings: 50 10 10 JP2 90% grayscale (settings will work well for Realight)	1,391KB

Copyright © Right Hemisphere 2007. All Rights Reserved.

Exploded Animations

This section contains hints and tips on working with exploded animations (on page 130).

Editing Keyframes

After exploding objects, you can move the individual objects along their axes at end of the animation, placing them in different positions to enhance the animation. This can be done by editing the objects via the Edit Keyframes tool (on page 109) or the timeline (on page 109).

Copyright © Right Hemisphere 2007. All Rights Reserved.

Measurements

This section contains hints and tips on working with measurements (on page 171).

Tessellation

Tessellation (on page 42) processes using Deep Exploration Module default values and higher tessellation values always place vertices on the original surfaces. This means that measurements taken are generally as accurate as those taken from an analytical surface when measurements are taken vertex to vertex. Measurements in Deep Exploration are based on true curves derived from the vertices and are therefore as accurate as the same dimensions taken from an analytical surface. Post processing such as polygon reduction may affect the positional accuracy of vertices however.

Copyright © Right Hemisphere 2007. All Rights Reserved.

Processing Large Files

Large amounts of memory are required for processing very large files. For example, if you are rendering large files using the Vector Illustration tool or reducing the polygon count of larger files.

The 3GB switch can be enabled so that 3GB of memory is available to Deep Exploration to process these larger sized files. With this switch disabled, only 2 GB of memory is available for processing.

Note that this procedure is only supported with the Windows XP operating system.

Procedures

To check if the 3GB switch is enabled:

1. Open a large file into Deep Exploration.
2. Render the file using the Vector Illustration tool.
3. Ensure the memory usage in the taskbar indicates that Deep Exploration is consuming more that 2GB of memory.

To enable the 3GB switch:

Set the following parameter in C:\boot.ini on your computer as follows:

Before

```
[boot loader]
timeout=30
default=multi(0)disk(0)rdisk(0)partition(1)\WINDOWS
[operating systems]
multi(0)disk(0)rdisk(0)partition(1)\WINDOWS="Microsoft Windows XP
Professional RU" /noexecute=optin /fastdetect
```

After

```
[boot loader]
timeout=30
default=multi(0)disk(0)rdisk(0)partition(1)\WINDOWS
[operating systems]
multi(0)disk(0)rdisk(0)partition(1)\WINDOWS="Microsoft Windows XP
Professional RU" /noexecute=optin /fastdetect /3GB
```

Copyright © Right Hemisphere 2007. All Rights Reserved.

Rotating Objects

This section contains hints and tips on working with object rotation (on page 96).

Gimbal Lock

Gimbal lock is the phenomenon of two rotational axis of an object pointing in the same direction; it occurs when animating an object with a rotational matrix known as Eular (pronounced Oiler) angles, and is a general limitation of that type of rotational matrix. Simply put, it means objects do not rotate in the way you think they should.

Eular Angles

Any system that uses Eular angles, including 3ds Max, Maya, LightWave, and SOFTIMAGE, will have difficulties with gimbal lock. This is because Eular angles evaluate each axis independently in a set order. In the case of 3ds Max, that order is generally X,Y,Z (you can however, change the order to whatever you would like). This means that firstly the object travels down the X axis. When that operation is complete it then travels down the Y axis, and finally the Z axis. The problem with gimbal lock occurs when you rotate the object down the Y axis, say 90 degrees. Since the X component has already been evaluated it doesn't get carried along with the other two axis, and the X and Z axis end by being pointed down the same axis.

If you are going to use Eular angles (note that every 3D application has them somewhere) you will have difficulties with gimbal lock. The only advantage to using Eular angles is that they are much easier for an artist to read and conceptualize than a Quaternion rotation.

Working with Eular Angles

Remember that an Eular angle, no matter what you call it (Local Eular, World Eular, XYZ Bezier) is still an Eular angle and as such, has severe limitations.

- If your object only needs to rotate along one axis, change the order of axis to match. That is, if you are rotating down the Y axis, make the order of axis Y,Z,X.
- If you are rotating down two axis, change the order of axis to correspond with the first and last axis. That is, if you are rotating down the X and Y axis, change the order of axis to X,Z,Y.
- If you are rotating down all three axis, be aware that there will be areas where gimbal lock will occur. Try to place those areas far enough out of the way that they will not be a problem, or separate the axis with an additional node (even this sometimes may not be enough).
- In certain specific cases, the parent of an object can actually gimbal lock it's child. Try placing an extra Quat node in the chain between these two nodes. You can see a good example of this in 3ds Max if you link anything using Eular angles to a Biped. One workaround is to first link a dummy with TCB controllers (Quat) to the biped, then link your chain to the dummy.
- The first axis evaluated will always happen in the objects local coordinate orientation.
- The last axis evaluated will generally happen in a world coordinate orientation.

Quaternion Rotations

Quaternion (Quat) rotations are far more powerful and robust than Eular angles. In 3ds Max, TCB controllers use Quaternion math to find their orientation; they evaluate all three axis at the same time to find a direction to travel, and a fourth value (the w component or, 'up' vector) to tell the matrix how far to travel. Therefore, gimbal lock is never a problem with Quat rotations as all three axis are updated at the same time. However, Quat rotations are far more complicated to read and conceptualize than an Eular angle.

RotationScript controllers in 3ds Max are Quat rotations which makes them far more powerful than Eular angles and expressions but they are also much more difficult to use and understand.

Copyright © Right Hemisphere 2007. All Rights Reserved.

Reducing Models

This section contains hints and tips on utilizing the polygon reduction settings.

Healing Models

If you have healed a model, you can lessen the reduction processing time by clearing the 'Prepare Options' check boxes as these tasks are performed during the healing process. Clearing these options significantly reduces the processing time for large models.

Cracks and Holes

During reduction, cracks and holes may appear in a model if vertices that are different are close to each other, and the polygon count is low. Joining vertices can help to remove these by combining all vertices that are within a certain distance from each other into one. This option works equally well on large and small models.

In the examples below, the model has been reduced by 20%, without and with combining the vertices. Notice how cracks and holes appear in the model when the vertices are not combined.



Without combining vertices / With combining vertices

Geometric Artifacts

If geometric artifacts remain after the reduction process, try normalizing the meshes when you reduce the model. For example, geometric artifacts may be visible after reducing model that have meshes very small meshes, with a bounding box size that is less than 0.01.

Normalizing small models where the meshes are located far apart in a scene, may produce poor results. The examples below show a scene in which the objects are far apart. The second example shows object 1 reduced by 20% with normalizing the meshes, while the third example shows object 1 reduced by 20% without normalizing. Notice how the object appears disported where the meshes have been normalized.

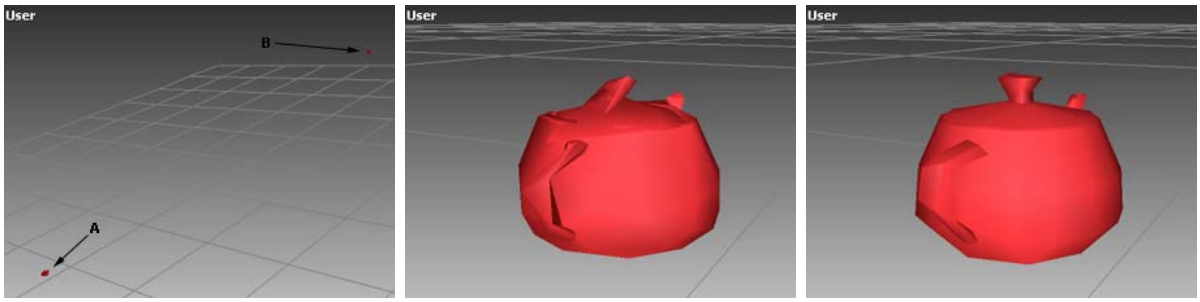

Objects far apart in a scene / Reduction 20% normalizing meshes / Reduction 20% without normalizing meshes

Copyright © Right Hemisphere 2007. All Rights Reserved.

Uninstalling Deep Exploration

When you uninstall the application, if any individual modules have been installed, they are also removed.

The uninstall process removes information from the folder where the application is installed, including any personal shader, material, and modified files. It does not remove any of the registry settings (on page 30), the file history, favorites, thumbnails, or any files located within the 3D Model folder.

Note: Any user can uninstall the application.

Procedure

To uninstall the application and modules:

1. Click **Start** in the Windows taskbar.
2. Select **All Programs > Right Hemisphere > [application] > Uninstall**.
3. Follow the instructions as they appear on your screen.

Note: You can also uninstall the application via the Control Panel. Please see your Windows documentation for further information.

Copyright © Right Hemisphere 2007. All Rights Reserved.

Appendix A: 2D File Formats

The following 2D file formats are supported by Deep Exploration CAD and Standard Editions and Deep Server. This list is organized alphabetically by file format.

File Format	Type	Extension	View/ Import	Export	Version/Notes
Adobe Encapsulated PostScript	Image	EPS	Yes (on page 451)	Yes (on page 451)*	Version 2. *Export via Vector Illustration (on page 163).
Adobe Illustrator Vector Graphic	Image	AI	Yes (on page 451)	Yes (on page 451)*	Versions 2. *Export via Vector Illustration (on page 163).
Adobe Photoshop Document	Image	PSD	Yes (on page 452)		
Adobe Portable Document 2D	Image /Scene	PDF		Yes (on page 452)	
Adobe Portable Document 3D	Image /Scene	PDF		Yes (on page 239)*	Creates a PDF document with 3D content. *Requires the PDF Publishing Module to be installed.
Autodesk Animator Graphic	Image	CEL	Yes (on page 458)		
DirectX DirectDraw Surface	Image	DDS	Yes (on page 458)		
EA/Amiga Interchange File Format	Image	IFF	Yes (on page 458)		
Flexible Precision Buffer Map	Image	FLX	Yes (on page 459)		
FLIC Animator Animation (flc)	Image	FLC	Yes (on page 459)		
FLIC Animator Animation (fli)	Image	FLI	Yes (on page 459)		
Graphics Interchange Format	Image	GIF	Yes (on page 460)		
JPEG 2000 J2K	Image	J2K	Yes (on page 460)		
JPEG 2000 JP2	Image	JP2	Yes (on page 460)	Yes (on page 461)	
JPEG 2000 JPC	Image	JPC	Yes (on page 462)	Yes (on page 462)	
JPEG 2000 JPX	Image	JPX	Yes (on page 463)		
JPEG Image	Image	JPG, JPEG	Yes (on page 463)	Yes (on page 463)	
Maya Interchange File Format	Image	IFF	Yes (on page 464)	Yes (on page 464)*	*Requires Maya to be installed.
OpenEXR Bitmap	Image	EXR	Yes (on page 465)	Yes (on page 466)	
Portable Network Graphics	Image	PNG	Yes (on page 467)	Yes (on page 467)	
Portable Pixelmap Graphic	Image	PPM	Yes (on page 468)	Yes (on page 468)	

Copyright © Right Hemisphere 2007. All Rights Reserved.

File Format	Type	Extension	View/ Import	Export	Version/Notes
Pro/ENGINEER 2D drawing	Image	DRW	Yes		Up to ProE Wildfire III. Optional download with purchase of the ProExplorer Module. Deep Server only.
Publisher's Paintbrush Bitmap Graphic	Image	PCX	Yes (on page 468)		
Radiance Picture	Image	HDR	Yes (on page 468)		
Scalable Vector Graphic	Image	SVG	Yes (on page 469)	Yes (on page 469)*	*Export via Vector Illustration (on page 163).
Silicon Graphics Image	Image	RGB, RGBA, INT, INTA	Yes (on page 471)		
ShockWave Flash Object	Image	SWF		Yes (on page 470)*	Must be viewed with Internet Explorer. *Export via Vector Illustration (on page 163).
SOFTIMAGE Picture	Image	PIC	Yes (on page 471)		
Tagged Image File Format	Image	TIF, TIFF	Yes (on page 472)	Yes (on page 472)*	*Export is also via Vector Illustration (on page 163).
TGA File	Image	TGA	Yes (on page 473)	Yes (on page 473)	
Windows Bitmap Graphic	Image	BMP, DIB	Yes (on page 474)	Yes (on page 474)	
Windows Cursor File	Image	CUR	Yes (on page 475)		
Windows Icon File	Image	ICO	Yes (on page 475)		
Windows Metafile	Scene	WMF	Yes (on page 475)		
Windows Run Length Encoded Bitmap	Image	RLE	Yes (on page 475)		

Copyright © Right Hemisphere 2007. All Rights Reserved.

Adobe Encapsulated Postscript Import (.eps)

You can view Adobe Encapsulated Postscript (.eps) files.

The .eps format, developed by Adobe, is a standard format for importing and exporting PostScript language files in all environments. It is usually a single page PostScript language program that describes an illustration. The purpose of the .eps file is to be included as an illustration in other PostScript language page descriptions. The .eps file can contain any combination of text, graphics, and images. An .eps file is the same as any other PostScript language page description, but with some restrictions.

For further information on using files, please see Opening Files (on page 39), Importing Files (on page 40), and Saving Files (on page 55).

Adobe Encapsulated Postscript Export (.eps)

You can save files to the Adobe Encapsulated Postscript (.eps) format.

The .eps format, developed by Adobe, is a standard format for importing and exporting PostScript language files in all environments. It is usually a single page PostScript language program that describes an illustration. The purpose of the .eps file is to be included as an illustration in other PostScript language page descriptions. The .eps file can contain any combination of text, graphics, and images. An .eps file is the same as any other PostScript language page description, but with some restrictions.

For further information on using files, please see Opening Files (on page 39), Importing Files (on page 40), and Saving Files (on page 55).

Adobe Illustrator Vector Graphic (.ai)

You can view Adobe Illustrator Vector Graphic (.ai) files.

This is a widely used format for the exchange of 2D objects. It supports Bezier splines as drawing objects. Bezier splines improve the modeling of natural (and some human-made) objects. It is a variation of the Adobe Encapsulated PostScript (.eps) format.

For further information on using files, please see Opening Files (on page 39), Importing Files (on page 40), and Saving Files (on page 55).

Adobe Illustrator Vector Graphic Export (.ai)

You can save to the Adobe Illustrator Vector Graphic (.ai) format.

This is a widely used format for the exchange of 2D objects. It supports Bezier splines as drawing objects. Bezier splines improve the modeling of natural (and some human-made) objects. It is a variation of the Adobe Encapsulated PostScript (.eps) format.

For further information on using files, please see Opening Files (on page 39), Importing Files (on page 40), and Saving Files (on page 55).

Copyright © Right Hemisphere 2007. All Rights Reserved.

Adobe Photoshop Document (.psd)

You can view Adobe Photoshop Document (.psd) files.

The .psd file format (Photoshop Document), developed by Adobe, is the native format used by the Adobe Photoshop application. The PSD contains image information along with layer, layer style, drop shadow and text information. You can open the PSD for editing in Photoshop and other compatible Adobe software such as Adobe InDesign but to view in standard applications the images are flattened or merged.

For further information on using files, please see Opening Files (on page 39), Importing Files (on page 40), and Saving Files (on page 55).

Adobe Portable Document 2D Export (.pdf)

You can save files to the Adobe Portable Document (.pdf) format.

For information regarding 3D interactivity within PDF documents, please see the Adobe Acrobat Professional Help delivered with Adobe Acrobat 3D.

For further information on using files, please see Opening Files (on page 39), Importing Files (on page 40),PDF Publishing Module V2.0 (on page 223) and Saving Files (on page 55).

Interface

Compress PDF—Used to reduce the size of the new PDF document.

Open PDF after Saving—Opens Adobe Acrobat and displays the PDF document after the file is exported to the .pdf format.

Text and Fonts—Used to select what will be exported.

- **Geometry Only**.
- **Geometry with Hidden Text**.
- **Embedded Fonts**.

Flatten Layers—Flattens any 3D layers which may exist in the file.

Bitmap Resolution (DPI)—Used to select the level of resolution in the PDF Document.

Export Active View Only—Exports only the active view.

Export Hidden Objects—Exports all objects, including those that are hidden.

OK—Closes the dialog and applies the settings. Any changes made to the settings are saved.

Cancel—Closes the dialog. Any changes made to the settings are lost.

Help—Opens the relevant Help topic.

Copyright © Right Hemisphere 2007. All Rights Reserved.

Adobe Portable Document 3D Export (.pdf)

You can save files to the Adobe Portable Document (.pdf) format with the PDF Publishing Module (on page 223). Most 3D content contained within these files is converted to the Universal 3D (.u3d) format (on page 532).

The .pdf file format (Portable Document Format), developed by Adobe, is used for representing documents in a manner that is independent of the original application software, hardware, and operating system used to create those documents. A .pdf file can describe documents containing any combination of text, graphics, and images in a device independent and resolution independent format.

Note: The .u3d format, adopted by Adobe, is required and used as the 3D publishing format in Adobe Acrobat.

For information regarding 3D interactivity within PDF documents, please see the Adobe Acrobat Professional Help delivered with Adobe Acrobat 3D.

For further information on using files, please see Opening Files (on page 39), Importing Files (on page 40),PDF Publishing Module V2.0 (on page 223) and Saving Files (on page 55).

Interface

PDF Template and Target—Used to view and select the template (on page 223) on which to base the new PDF document.

- **Preview**—Displays a preview of the selected template.
- **Name**—The names of the available templates.
- **Description**—The description of the selected template.
- **Use external template**—Used to select the external template on which to base the PDF document.
  - **File name**—The file name and path of the template.
  - **Browse**—Used to browse for and select the template.
- **3D Model or 2D Image Target**—Used to select the target location of the model or image in the PDF document.
  - **Field name**—The name of the field in which the graphic will display. For example, 3D_Annotation1.
  - **Refresh**—Refreshes the display.
- **Start Adobe Acrobat after Publishing**—Opens Adobe Acrobat and displays the PDF document after the file is exported to the .pdf format.

Note: The Adobe application that opens depends on what is installed on your computer.

Publishing Options—Used to establish publishing settings for the PDF.

- **3D Publishing Options**—Additional settings relating to 3D models. These options determine the way in which the 3D model displays, whether the 3D model is activated when the PDF is opened, and whether associated model views are included.
  - **Preview Image**—Determines what displays in the 3D model area of the PDF.
    - **Raster image via Software Z-Buffer Render**—Creates a hybrid file using the Software Z-buffer renderer.
    - **Raster image via Ray-Trace Render**—Creates a hybrid file using the Raytracer renderer. Note that this option is not suitable for a 3D model with callouts.
    - **External Raster image**—Displays an external raster image instead of the 3D model.
    - **External Vector File (in .PDF)**—Displays an external vector image instead of the 3D model.

Copyright © Right Hemisphere 2007. All Rights Reserved.

        - **Vector image via Illustration Module**—Displays the image as a vector illustration of the current view of the scene. Otherwise, the image is displayed as a raster illustration.
    - **Settings** (on page 456)—Opens the appropriate Settings dialog and is used to establish settings for the type of publishing option that you have selected. This option is not available when Preview Image is set to either of the external publishing options.
    - **External File**—The file name and path of the external raster image. This option is only available when Preview Image is set to External Raster Image or External Vector File (in PDF).
    - **Browse**—Used to browse for and select the file. This option is only available when the Preview type is set to External Raster Image.
    - **Activate 3D model**—Automatically activates the 3D model when the PDF document is opened. Otherwise, the 2D image is displayed.
    - **Save model views to Adobe Acrobat (on page 77)**—Saves all model views within the file for viewing in Adobe Acrobat.
    - **Format**—Used to select the type of U3D format in which to produce the file.
    - **Texture Quality**—Used to nominate the quality of the textures in the file.
    - **Save Normals**—Saves all normals.
- **2D Image Publishing Options**—Additional settings relating to 2D images. These options determine the way in which the 2D image displays.
    - **Image Format**—The way in which the 2D image displays in the published PDF.
        - **Raster image via Software Z-Buffer Render**—Creates a hybrid file using the Software Z-buffer renderer.
        - **Raster image via Ray-Trace Render**—Creates a hybrid file using the Raytracer renderer.
        - **Vector image via 2D PDF Module**—Displays the image as a vector image. Otherwise, the image is displayed as a raster image. Note that this option is only available for 2D vector .DWG or .DWF files.
        - **Vector image via Illustration Module**—Displays the image as a vector illustration of the current view of the scene. Otherwise, the image is displayed as a raster illustration.
    - **Settings** (on page 456)—Opens the appropriate Settings dialog and is used to establish settings for the type of publishing option that you have selected. This option is not available when Preview Image is set to either of the external publishing options.

PDF Specific—Additional settings relating to all models and images.

- **XFDF file name**—Used to attach an XFDF file containing data to autofill fields in the PDF during publishing.
- **Browse**—Used to browse for and select the file.
- **Attachments**—Used to attach files to the PDF during publishing (Word, Powerpoint, Catia, any file on disk).
- **Browse**—Used to browse for and select the file.
- **Doc Level JS**—Used to add custom JavaScripts to the PDF at document level.
- **Browse**—Used to browse for and select the file.
- **Page Level JS**—Used to add custom JavaScripts to the PDF at Page level.
- **Browse**—Used to browse for and select the file.
- **3D Level JS**—Used to add custom JavaScripts to the PDF at 3D level.
- **Browse**—Used to browse for and select the file.

Copyright © Right Hemisphere 2007. All Rights Reserved.

- **Add Watermark with Following Text**—Used to create text on a printed watermark.
- **Watermark Text**—The text to print in the watermark.
- **Protect PDF with following password**—Used to set a protection password for the PDF.
- **Password**—The protection password.
- **Enable PDF for Merging**—Creates unique names for all RH Acrobat controls so that multiple interactive PDF documents can be merged together in Acrobat without causing conflicts.
- **Metadata** (on page 242)—Opens the Metadata dialog and is used to add information to the PDF document XMP (Extensible Metadata Platform) properties.

OK—Closes the dialog and applies the settings. Any changes made to the settings are saved.

Cancel—Closes the dialog. Any changes made to the settings are lost.

Help—Opens the relevant Help topic.

Z-Buffer Render Settings Dialog

Save to .pdf format > Settings > Publishing Options tab > Select Raster Image via software Z-Buffer Render > Settings

The Z-Buffer Render Settings dialog is used to establish z-buffer rendering settings including antialiasing.

Interface

Antialiasing—Used to set the antialiasing for a raster image.

Render additional items—Used to render all additional items also.

OK—Closes the dialog and applies the settings. Any changes made to the settings are saved.

Cancel—Closes the dialog. Any changes made to the settings are lost.

Help—Opens the relevant Help topic.

Ray-Trace Render Settings Dialog

Save to .pdf format > Settings > Publishing Options tab > Select Raster Image via Ray-Trace Render > Settings

The Ray-Trace Render Settings dialog is used to establish a number of rendering settings including antialiasing, double-sided polygons, texture map filtering, and management of shadows.

Interface

Antialiasing—Used to set the antialiasing for a raster raytrace image.

Double-sided polygons—Used to render polygons as double-sided.

Filter texture maps—Used to filter all texture maps.

Raytrace reflections—used to apply reflections to the image.

Refractions—Used to apply refractions to the image.

Shadows—Used to render all shadows.

Copyright © Right Hemisphere 2007. All Rights Reserved.

Soft shadows—Used to apply soft shadows to the image.

Use multithreaded rendering—Used to render the image using multithreading.

OK—Closes the dialog and applies the settings. Any changes made to the settings are saved.

Cancel—Closes the dialog. Any changes made to the settings are lost.

Help—Opens the relevant Help topic.

Vector Illustration Settings Dialog

Save to .pdf format > Settings > Publishing Options tab > Select Vector Image via Illustration module > Settings

The Vector Illustration Settings dialog is used to establish a number of vector rendering settings including line thickness, wireframe display, and callout rendering.

Interface

Lines—Used to select various line output options for the illustration.

- **Line thickness**—Determines the thickness of rendered lines.
- **Boundary Thickness**—Determines the thickness of the object boundaries, range is 0 - 10.
- **Tolerance angle**—Determines the degree of angle tolerance for all rendered outlines. If the angle between two adjacent faces is greater than this value, then the edge between these faces is treated as an outline edge.
- **Calculate intersections** (on page 165)—Draws lines along all face-face intersections. Vectors are normally calculated using triangle edges. If the lines of intersection fall outside of triangle edges where geometry or objects intersect each other, this option can be used to calculate the triangle intersections and output them as vectors.
- **Allow self-intersections**—Tests all mesh faces for intersection. Not using this option ensures only faces of different meshes are tested for intersection. For example, if two faces belonging to Mesh1 intersect, the line appears only if this option is selected. If two faces intersect, with the first face belonging to Mesh1 and the second to Mesh2, the intersection line is drawn regardless of this option setting. We recommend not using this option.
- **Remove hidden lines**—Removes lines that are hidden by the geometry. For example, a Z-buffer. This is usually what is required for rendering. However, at times you may want a see-through effect. We recommend selecting this option.
- **Show as wireframe**—Causes all edges to be treated as outline edges. The tolerance angle setting becomes redundant when this is selected.

Colors—Used to select the colors to use in the illustration.

- **Use Object's Color**—Uses the object's color for each object's rendered lines.
- **Line Color**—Used to open the color selector and select a color for rendered lines. This option is only available if the Use Object's Color check box is not selected.

Include callouts—Includes callouts in the vector illustration.

BOM—Used to determine if and where the BOM is placed on the illustration.

- **None**—Excludes the BOM from the illustration.
- **Bottom**—Places the BOM at the bottom of the illustration.
- **Right**—Places the BOM at the right of the illustration.

OK—Closes the dialog and applies the settings. Any changes made to the settings are saved.

Cancel—Closes the dialog. Any changes made to the settings are lost.

Help—Opens the relevant Help topic.

Copyright © Right Hemisphere 2007. All Rights Reserved.

Metadata Dialog

Save to .pdf format > Settings > PDF Specific tab > Metadata

The Metadata dialog is used to establish the information displayed in the document properties when a model is saved to the .pdf format.

Interface

Title—The document title that is displayed in the 'Document Title' field of the Acrobat 3D Additional Metadata dialog.

Author—The document author's name that is displayed in the document's Author property. The current user name is displayed here by default.

Subject—The subject of the scene that is displayed in the document's Subject property.

Note: This is used in the 'Description' field in the Acrobat 3D Additional Metadata dialog.

Keywords—Additional scene information that is displayed in the document's Keywords property.

Auto-generate title—Automatically displays the document's file name and extension in the document's Title property. Any text entered in the Title field is ignored.

Auto-generate subject—Automatically displays the document's file name, and associated template name in the document's Subject property. Any text entered in the Subject field is ignored.

Add parts list to keywords—The model's parts list that is displayed in the document's Keywords property. This information is displayed after any information entered in the Keywords field.

OK—Closes the dialog and applies the settings. Any changes made to the settings are saved.

Cancel—Closes the dialog. Any changes made to the settings are lost.

Help—Opens the relevant Help topic.

Copyright © Right Hemisphere 2007. All Rights Reserved.

Autodesk Animator Graphic (.cel)

You can view Autodesk Animator Graphic (.cel) files.

The .cel file format is used in the Animator program developed by Autodesk for the animation of 2D graphics. CEL files are extensions of the FLIC file formats with a different extension and one more entry in the 'prefix data' (a kind of optional header).

For further information on using files, please see Opening Files (on page 39), Importing Files (on page 40), and Saving Files (on page 55).

DirectX DirectDraw Surface (.dds)

You can view DirectX DirectDraw Surface (.dds) files.

The .dds file format was developed by Microsoft and is used in the DirectX application to store textures and cubic environment maps, both with and without mipmap levels. It can store uncompressed and compressed pixel formats.

A cubemap is a set of six images, representing what you would see from a certain location if you were to look forward, left, right, backward, up, and down. Only one of these images is displayed at a time when a cubemap file is opened. However, you can select which one you see using the 2D viewport right-click menu (on page 390).

This file format is supported by the Microsoft DirectX Texture tool (DXTex Tool), as well as some third-party tools, and by the Direct3D extensions (D3DX) library. It is the preferred file format for storing DXTn compressed data.

For further information on using files, please see Opening Files (on page 39), Importing Files (on page 40), and Saving Files (on page 55).

EA/Amiga Interchange File Format (.iff)

You can view EA/Amiga Interchange File (.iff) files.

The .iff file format (Interchange File Format) is a general purpose data storage format that can associate and store multiple types of data and is developed by Electronic Arts (EA) and Amiga. It is a generic structured file access mechanism, and is not limited to images. For example, .aiff files are audio .iff.

IFF images can have 8 or 16-bit per channel RGB, and optionally Alpha, and can optionally contain a 32-bit floating point depth map (sometimes called a Z-buffer).

For further information on using files, please see Opening Files (on page 39), Importing Files (on page 40), and Saving Files (on page 55).

Copyright © Right Hemisphere 2007. All Rights Reserved.

Flexible Precision Buffer Map (.flx)

You can view Flexible Precision Buffer Map (.flx) files.

The .flx file format (FLX) is used in Animator for the animation of 2D graphics and is developed by Autodesk. The FLX file format is a slight variation on the .flc file format to achieve more flexibility with regard to color depth.

Note: When you open a high dynamic range image (on page 176) (HDRI), resolution controls are displayed in the Information bar. These allow you to modify the image.

For further information on using files, please see Opening Files (on page 39), Importing Files (on page 40), and Saving Files (on page 55).

FLIC Animator Animation (.flc)

You can view FLIC Animator Animation (.flc) files.

The .flc file format (FLIC) is used in Animator for the animation of 2D graphics and is developed by Autodesk. The format is used in a variety of animation programs, computer games and CAD applications. FLIC formats do not support audio or video data, but instead store sequences of still image data.

The .flc file format adds configurable resolution and better compression than .fli files.

For further information on using files, please see Opening Files (on page 39), Importing Files (on page 40), and Saving Files (on page 55).

Limitations

- Import is limited to the first frame only.
- The .fli format is older and is limited to a resolution of 320×200.

FLIC Animator Animation (.fli)

You can view FLIC Animator Animation (.fli) files.

The .fli file format (FLIC) is used in Animator for the animation of 2D graphics and is developed by Autodesk. The format is used in a variety of animation programs, computer games and CAD applications. FLIC formats do not support audio or video data, but instead store sequences of still image data.

The .flc file format adds configurable resolution and better compression than .fli files.

See also Opening Files (on page 39), Importing Files (on page 40), and Saving Files (on page 55).

Limitations

- Import is limited to the first frame only.
- The .fli format is older and is limited to a resolution of 320×200.

Copyright © Right Hemisphere 2007. All Rights Reserved.

Graphics Interchange Format (.gif)

You can view Graphics Interchange Format (.gif) files.

The .gif file format is a image standard on the World Wide Web and was developed by CompuServe. The format includes compression, transparency, interlacing and storage of multiple images within a single file which allows for a primitive form of animation.

For further information on using files, please see Opening Files (on page 39), Importing Files (on page 40), and Saving Files (on page 55).

JPEG 2000 J2K (.j2k)

You can view JPEG (Joint Photographics Experts Group) 2000 (.j2k) files.

The .j2k file format (J2K) is a part of the Joint Photographics Experts Group 2000 (JPEG 2000) committee standard designed to supersede the original JPEG standard. The JPEG 2000 standard makes use of new wavelet technology to allow better compression and lossless retention of images (without distortion or image integrity loss).

For further information on using files, please see Opening Files (on page 39), Importing Files (on page 40), and Saving Files (on page 55).

JPEG 2000 JP2 (.jp2)

You can view JPEG (Joint Photographics Experts Group) 2000 (.jp2) files.

The .jp2 file format (JP2) is a part of the Joint Photographics Experts Group 2000 (JPEG 2000) committee standard designed to supersede the original JPEG standard. The JPEG 2000 standard makes use of new wavelet technology to allow better compression and lossless retention of images (without distortion or image integrity loss).

The JP2 format is the most basic implementation of the JPEG 2000 standard and contains the only essential metadata such as color space information (which is essential for accurate rendering). However, this standard features extensible architecture that allows more advanced file formats to be covered under the same implementation.

For further information on using files, please see Opening Files (on page 39), Importing Files (on page 40), and Saving Files (on page 55).

Copyright © Right Hemisphere 2007. All Rights Reserved.

JPEG 2000 JP2 Export (.jp2)

You can save files to the JPEG (Joint Photographics Experts Group) 2000 (.jp2) format.

The .jp2 file format (JP2) is a part of the Joint Photographics Experts Group 2000 (JPEG 2000) committee standard designed to supersede the original JPEG standard. The JPEG 2000 standard makes use of new wavelet technology to allow better compression and lossless retention of images (without distortion or image integrity loss).

The JP2 format is the most basic implementation of the JPEG 2000 standard and contains the only essential metadata such as color space information (which is essential for accurate rendering). However, this standard features extensible architecture that allows more advanced file formats to be covered under the same implementation.

For further information on using files, please see Opening Files (on page 39), Importing Files (on page 40), and Saving Files (on page 55).

Interface

Export as grayscale—Saves the file in 8-bit grayscale format. Otherwise, standard 24-bit full-color is used.

Lossy compression—Saves the file using lossy compression. Otherwise, lossless compression is used. 'Lossy' (loss of data) compression can be used to compress .rh files; lossy compression treats two vertices that are sufficiently close to each other as one, resulting in a change in image size and quality.

Percentage file size—Determines the size at which to save the file as a percentage of the uncompressed image. A smaller file size results in a lower quality image and a larger size results in a higher quality image.

Note: Files are saved at the smallest possible size. That is, if a file can be saved using lossless compression at a smaller file size than determined by the spinner.

Copyright © Right Hemisphere 2007. All Rights Reserved.

JPEG 2000 JPC (.jpc)

You can view JPEG (Joint Photographics Experts Group) 2000 JPC (.jpc) files.

The .jpc file format (JPC) is a part of the Joint Photographics Experts Group 2000 (JPEG 2000) committee standard designed to supersede the original JPEG standard. The JPEG 2000 standard makes use of new wavelet technology to allow better compression and lossless retention of images (without distortion or image integrity loss).

For further information on using files, please see Opening Files (on page 39), Importing Files (on page 40), and Saving Files (on page 55).

JPEG 2000 JPC Export (.jpc)

You can save files to the JPEG (Joint Photographics Experts Group) 2000 JPC (.jpc) format.

The .jpc file format (JPC) is a part of the Joint Photographics Experts Group 2000 (JPEG 2000) committee standard designed to supersede the original JPEG standard. The JPEG 2000 standard makes use of new wavelet technology to allow better compression and lossless retention of images (without distortion or image integrity loss).

For further information on using files, please see Opening Files (on page 39), Importing Files (on page 40), and Saving Files (on page 55).

Interface

Export as grayscale—Saves the file in 8-bit grayscale format. Otherwise, standard 24-bit full-color is used.

Lossy compression—Saves the file using lossy compression. Otherwise, lossless compression is used. 'Lossy' (loss of data) compression can be used to compress .rh files; lossy compression treats two vertices that are sufficiently close to each other as one, resulting in a change of image size and quality.

Percentage file size—Determines the size at which to save the file as a percentage of the uncompressed image. A smaller file size results in a lower quality image and a larger size results in a higher quality image.

Note: Files are saved at the smallest possible size. That is, if a file can be saved using lossless compression at a smaller file size than determined by the spinner.

Copyright © Right Hemisphere 2007. All Rights Reserved.

JPEG 2000 JPX (.jpx)

You can view JPEG (Joint Photographics Experts Group) 2000 JP2 (.jpx) files.

The .j2x file format (JPX) is a part of the Joint Photographics Experts Group 2000 (JPEG 2000) committee standard designed to supersede the original JPEG standard. The JPEG 2000 standard makes use of new wavelet technology to allow better compression and lossless retention of images (without distortion or image integrity loss).

For further information on using files, please see Opening Files (on page 39), Importing Files (on page 40), and Saving Files (on page 55).

JPEG Image (.jpeg, .jpg)

You can view JPEG (Joint Photographics Experts Group) Image (.jpeg, .jpg) files.

These file formats, developed by the Joint Photographics Experts Group (JPEG) committee, are digital image formats that use compression algorithms defined in the JPEG standard - ISO 10918. The formats are primarily used in graphics and image manipulation programs and are a standard on the World Wide Web.

For further information on using files, please see Opening Files (on page 39), Importing Files (on page 40), and Saving Files (on page 55).

JPEG Image Export (.jpeg, .jpg)

You can save files to the JPEG (Joint Photographics Experts Group) Image (.jpeg, .jpg) format.

These file formats, developed by the Joint Photographics Experts Group (JPEG) committee, are digital image formats that use compression algorithms defined in the JPEG standard - ISO 10918. The formats are primarily used in graphics and image manipulation programs and are a standard on the World Wide Web.

For further information on using files, please see Opening Files (on page 39), Importing Files (on page 40), and Saving Files (on page 55).

Interface

Image Quality—Determines the quality of the output image. A higher quality image results in a larger file size and a lower quality image results in a smaller size file.

Copyright © Right Hemisphere 2007. All Rights Reserved.

Maya Interchange File Format (.iff)

You can view Maya Interchange File Format (.iff) files.

The .iff file format was originally developed by Electronic Arts (EA) and Amiga and is utilized by Maya to outputs images. IFF is a generic structured file access mechanism, and is not limited to images - for example, AIFF files are audio IFF.

IFF images can have 8 or 16-bit per channel RGB and optionally Alpha. They can also optionally contain a 32-bit floating point depth map (sometimes called a Z-buffer).

Note: The Maya application must be installed for this functionality to be enabled.

For further information on using files, please see Opening Files (on page 39), Importing Files (on page 40), and Saving Files (on page 55).

Support

- 1-24 bpp images.

Maya Interchange File Format Export (.iff)

You can save files to the Maya Interchange (.iff) format.

The .iff file format was originally developed by Electronic Arts (EA) and Amiga and is utilized by Maya to outputs images. IFF is a generic structured file access mechanism, and is not limited to images. For example, AIFF files are audio IFF. IFF images can have 8 or 16-bit per channel RGB, and optionally Alpha, and can optionally contain a 32-bit floating point depth map (sometimes called a Z-buffer).

Note: The Maya application must be installed for this functionality to be enabled.

For further information on using files, please see Opening Files (on page 39), Importing Files (on page 40), and Saving Files (on page 55).

Support

- 1-24 bpp images.

Copyright © Right Hemisphere 2007. All Rights Reserved.

OpenEXR Bitmap (.exr)

You can view OpenEXR Bitmap (.exr) files.

The .exr file format was developed by Industrial Light & Magic (http://www.openexr.com) for OpenEXR.

For further information on using files, please see Opening Files (on page 39), Importing Files (on page 40), and Saving Files (on page 55).

Support

- 16-bit floating-point, 32-bit floating-point, and 32-bit integer pixels.
- Extensibility to include new compression codec's and image types.
- High dynamic range image (HDRI) and color precision.

  Note: When you open a high dynamic range image (on page 176) (HDRI), resolution controls are displayed in the Information bar. These allow you to modify the image.

- Multiple lossless image compression algorithms.

Copyright © Right Hemisphere 2007. All Rights Reserved.

OpenEXR Bitmap Export (.exr)

You can save files to the OpenEXR Bitmap (.exr) format.

The .exr file format was developed by Industrial Light & Magic (ILM) for OpenEXR. OpenEXR is used by ILM on all motion pictures currently in production.

For further information on using files, please see Opening Files (on page 39), Importing Files (on page 40), and Saving Files (on page 55).

Support

- 16-bit floating-point, 32-bit floating-point, and 32-bit integer pixels.
- Extensibility to include new compression codec and image types.
- High dynamic range image (HDRI) and color precision.

> Note: When you open a high dynamic range image (on page 176) (HDRI), resolution controls are displayed in the Information bar. These allow you to modify the image.

- Multiple lossless image compression algorithms.

Interface

Common—Used to establish the common settings.

- **Compression type—**Used to select the type of compression to apply when saving the file.
  - **None—**Saves the file using no compression.
  - **Run-length encoding—**Saves the file using a run length encoding compression. Run-length encoding (RLE) is a very simple form of data compression in which repeated data (that is, sequences in which the same data value occurs many consecutive times, or in a run) are stored as a single data value and how many times it occurs.
  - **zlib single scan lines—**Saves the file using a zlib compression performed one scan line at a time.
  - **zlib 16 block scan lines—**Saves the file using a zlib compression performed in blocks of 16 scan lines. This option is most effective with images that do not have film grain applied.
  - **Piz-based wavelet—**Saves the file using a combined wavelet / Huffman compression. This form of compression is quite effective when dealing with grainy images, and will often surpass any of the other options under grainy conditions.
- **Line order—**Used to select the order in which to perform the compression based on the first scan line.
  - **Use lowest Y coordinate scan line**—Begins the compression using the scan line with the lowest 'Y' coordinate.
  - **Use highest Y coordinate scan line—**Begins the compression using the scan line with the highest 'Y' coordinate.

Copyright © Right Hemisphere 2007. All Rights Reserved.

Portable Network Graphics (.png)

You can view Portable Network Graphics (.png) files.

The .png file format (Portable Network Graphics), developed by the PNG Internet Group, is a bitmapped (raster) image file format. This file format is primarily used in graphics and image manipulation programs and is a standard on the World Wide Web.

PNG is capable of storing up to 16-bits (gray-scale) or 48-bits (true color) per pixel, and up to 16-bits of alpha data and supports the progressive display of image data and storage of gamma, transparency and textual information, and uses a lossless form of data compression.

For further information on using files, please see Opening Files (on page 39), Importing Files (on page 40), and Saving Files (on page 55).

Support

- All sub-types.

Portable Network Graphics Export (.png)

You can save files to the Portable Network Graphics (.png) format.

The .png file format (Portable Network Graphics), developed by the PNG Internet Group, is a bitmapped (raster) image file format. This file format is primarily used in graphics and image manipulation programs and is a standard on the World Wide Web.

This format is capable of storing up to 16-bits (gray-scale) or 48-bits (true color) per pixel, and up to 16-bits of alpha data and supports the progressive display of image data and storage of gamma, transparency and textual information, and uses a lossless form of data compression.

For further information on using files, please see Opening Files (on page 39), Importing Files (on page 40), and Saving Files (on page 55).

Support

- All sub-types.

Interface

Interlaced—This option allows the image to be downloaded via internet browsers in successive waves of bit streams allowing the image to be viewed in low resolution until the missing lines arriving.

Copyright © Right Hemisphere 2007. All Rights Reserved.

Portable Pixelmap Graphic (.ppm)

You can save files to the Portable Pixelmap Graphic (.ppm) format.

The .ppm file format is a simple color graphics format and serves as the lowest common denominator for converting and exchanging graphics files between different platforms. It uses 24-bit per pixel, 8 for red, 8 for blue, and 8 for green. Unlike most graphics file formats, a PPM file is plain text and can be processed with text processing tools. It is related to the PBM (black and white) and PGM (grayscale) graphics file formats.

For further information on using files, please see Opening Files (on page 39), Importing Files (on page 40), and Saving Files (on page 55).

Portable Pixelmap Graphic Export (.ppm)

You can save files to the Portable Pixelmap Graphic (.ppm) format.

This format is mainly available under UNIX and on Intel-based PCs.

See also Opening Files (on page 39), Saving Files (on page 55), and Importing Files (on page 40).

Publisher's Paintbrush Bitmap Graphic (.pcx)

You can view Publisher's Paintbrush Bitmap Graphic (.pcx) files.

The .pcx file format is a bitmap format developed by PC Paintbrush and is used to store bitmap (raster) graphics on PCs. PCX can store mapped and unmapped image, supports 4-bit, 8-bit, and 24-bit graphics and can contain uncompressed or RLE-compressed image data.

For further information on using files, please see Opening Files (on page 39), Importing Files (on page 40), and Saving Files (on page 55).

Radiance Picture Format (.hdr)

You can view Radiance Picture Format (.hdr) files.

The .hdr file format provides a high dynamic range image (HDRI) file format for use in the Radiance Software suite. It stores color values in four bytes: three for the red, green and blue color values and one as a common exponent.

Note: When you open a high dynamic range image (on page 176) (HDRI), resolution controls are displayed in the Information bar. These allow you to modify the image.

For further information on using files, please see Opening Files (on page 39), Importing Files (on page 40), and Saving Files (on page 55).

Copyright © Right Hemisphere 2007. All Rights Reserved.

Scalable Vector Graphics (.svg)

You can view Scalable Vector Graphics (.svg) files.

The .svg file format (Scalable Vector Graphics) is open source standard vector graphics language based on XML (Extensible Markup Language) developed by the World Wide Web Consortium (W3C). It is primarily used to design Web pages with high-resolution graphics including gradients, transparency, animation, and filter effects.

For further information on using files, please see Opening Files (on page 39), Importing Files (on page 40), and Saving Files (on page 55).

Support

- The .svg format supports Bezier splines, NURBS curve conversion and embedded fonts.

Note: Bezier splines improve the modeling of natural (and some human-made) objects.

Scalable Vector Graphics Export (.svg)

You can save files to the Scalable Vector Graphics (.svg) format.

The .svg file format (Scalable Vector Graphics) is open source standard vector graphics language based on XML (Extensible Markup Language) developed by the World Wide Web Consortium (W3C). It is primarily used to design Web pages with high-resolution graphics including gradients, transparency, animation, and filter effects.

For further information on using files, please see Opening Files (on page 39), Importing Files (on page 40), and Saving Files (on page 55).

Support

- The .svg format supports Bezier splines, NURBS curve conversion and embedded fonts.

Note: Bezier splines improve the modeling of natural (and some human-made) objects.

Copyright © Right Hemisphere 2007. All Rights Reserved.

Shockwave Flash Object (.swf)

You can view Shockwave Flash Object (.swf) files.

The .swf file format is a binary format that delivers vector graphics (especially animations) and other data types, including 'bitmapped' video and sound over the Internet to the Flash Player. Commentators describe the technology as 'non-native' to the Web. Very simple playback (with a repeat loop) is controlled by a timeline; interactive examples (even very simple ones) use both a timeline and ActionScript, a scripting language similar to JavaScript. ActionScripts may reference objects within the .swf file or resources external to it. For example, FLV video files.

SWF files are typically derived from a FLA file (Flash Project File); they may also be produced in other ways using third-party software. They may be combined with a runtime version of the Flash player, resulting in a file type called projector. Windows versions of projector files are executables with an .exe extension.

Note: There are no video controls displayed underneath the viewport.

For further information on using files, please see Opening Files (on page 39), Importing Files (on page 40), and Saving Files (on page 55).

Shockwave Flash Object Export (.swf)

You can save files to the Shockwave Flash Object (.swf) format.

The .swf file format is a binary format that delivers vector graphics (especially animations) and other data types, including 'bitmapped' video and sound over the Internet to the Flash Player. Commentators describe the technology as 'non-native' to the Web. Very simple playback (with a repeat loop) is controlled by a timeline; interactive examples (even very simple ones) use both a timeline and ActionScript, a scripting language similar to JavaScript. ActionScripts may reference objects within the .swf file or resources external to it. For example, FLV video files.

SWF files are typically derived from a FLA file (Flash Project File); they may also be produced in other ways using third-party software. They may be combined with a runtime version of the Flash player, resulting in a file type called projector. Windows versions of projector files are executables with an .exe extension.

Note: There are no video controls displayed underneath the viewport.

For further information on using files, please see Opening Files (on page 39), Importing Files (on page 40), and Saving Files (on page 55).

Copyright © Right Hemisphere 2007. All Rights Reserved.

Silicon Graphics Image (.rgb, .rgba, .int, .inta)

You can view Silicon Graphics Image (.rgb, .rgba, .int, .inta) files.

The .sgi file format is a generic bitmap format used for storing black-and-white, gray-scale, and color images developed at Silicon Graphics. SGI files include color .rgb (.rgb extension), color .rgb with alpha channel data (.rgba extension), and .int images.

For further information on using files, please see Opening Files (on page 39), Importing Files (on page 40), and Saving Files (on page 55).

Support

- 8-32 bpp images.
- RLE or uncompressed.

Limitations

- Color maps are not supported.

SOFTIMAGE Picture (.pic)

You can view SOFTIMAGE Picture (.pic) files.

The .pic file format is a bitmap (raster) image file developed by Softimage. The format originated under MS-DOS on Intel-based machines.

For further information on using files, please see Opening Files (on page 39), Importing Files (on page 40), and Saving Files (on page 55).

Copyright © Right Hemisphere 2007. All Rights Reserved.

Tagged Image File Format (.tif, .tiff)

You can view Tagged Image (.tif, .tiff) files.

The .tif and .tiff file formats, developed by Aldus and now controlled by Adobe, are the de-facto standard formats for high color depth (32-bit) graphics. They are highly compressed 2-bit formats that can render to a very high resolution. For example, 16,000 x 16,000. They are widely used in image manipulation applications such as Photoshop, DTP, and scanning, and can be directly manipulated by PostScript. They include a number of options that can be used to indicate the simple geometry of the image, such as its size, but others define how the data is arranged and various image compression options.

For further information on using files, please see Opening Files (on page 39), Importing Files (on page 40), and Saving Files (on page 55).

Tagged Image File Format Export (.tif, .tiff)

You can save files to the Tagged Image file (.tif, .tiff) format.

The .tif and .tiff file formats, developed by Aldus and now controlled by Adobe, are the de-facto standard formats for high color depth (32-bit) graphics. They are highly compressed 2-bit formats that can render to a very high resolution. For example, 16,000 x 16,000. They are widely used in image manipulation applications such as Photoshop, DTP, and scanning, and can be directly manipulated by PostScript. They include a number of options that can be used to indicate the simple geometry of the image, such as its size, but others define how the data is arranged and various image compression options.

For further information on using files, please see Opening Files (on page 39), Importing Files (on page 40), and Saving Files (on page 55).

Copyright © Right Hemisphere 2007. All Rights Reserved.

TGA File (.tga)

You can view TGA (Truevision Advanced Raster Graphics Adapter) (.tga) files.

The .tga file format (TARGA) is one of the most widely used bitmap file formats for storage of 8 to 32-bit truecolor images and is developed by TrueVision.

For further information on using files, please see Opening Files (on page 39), Importing Files (on page 40), and Saving Files (on page 55).

Support

- All sub-types.
- Alpha channel.
- Color maps.
- Developer-definable data.
- Gamma value.
- Postage stamp image.
- RLE compression.
- Textual information.

TGA File Export (.tga)

You can save files to the TGA (Truevision Advanced Raster Graphics Adapter) (.tga) format.

The .tga file format (TARGA) is one of the most widely used bitmap file formats for storage of 8 to 32-bit truecolor images and is developed by TrueVision.

For further information on using files, please see Opening Files (on page 39), Importing Files (on page 40), and Saving Files (on page 55).

Support

- All sub-types.
- Alpha channel.
- Color maps.
- Developer-definable data.
- Gamma value.
- Postage stamp image.
- RLE compression.
- Textual information.

Copyright © Right Hemisphere 2007. All Rights Reserved.

Windows Bitmap Graphic (.bmp, dib)

You can view Windows Bitmap Graphic (.bmp, .dib) files.

The .bmp file format is the standard graphic file format for the Windows operating system and is developed by Microsoft. Most graphics and imaging applications support the creation and display of .bmp format. The files contain either color or black-and-white bitmap (raster) data and the format was developed for storing bitmap files in a device-independent bitmap (DIB) format allowing display on any type of display device.

The Device Independent Bitmap (DIB) is the format used to store bitmaps in .bmp files. However, you are able save DIB files to memory.

These files exist in two different formats:

- OS/2 Format. BMP is the native bitmap file format of OS/2.
- Windows Format.

See also Opening Files (on page 39), Importing Files (on page 40), and Saving Files (on page 55).

Support

- Windows and OS/2.
- 1/8/16/24/32 bpp.
- RLE and uncompressed.

Windows Bitmap Graphic Export (.bmp, .dib)

You can save files to the Windows Bitmap Graphic (.bmp, .dib) format.

The .bmp file format is the standard graphic file format for the Windows operating system and is developed by Microsoft. Most graphics and imaging applications support the creation and display of .bmp format. The files contain either color or black-and-white bitmap (raster) data and the format was developed for storing bitmap files in a device-independent bitmap (DIB) format allowing display on any type of display device.

The Device Independent Bitmap (DIB) is the format used to store bitmaps in .bmp files. However, you are able save DIB files to memory.

These files exist in two different formats:

- OS/2 Format. BMP is the native bitmap file format of OS/2.
- Windows Format.

For further information on using files, please see Opening Files (on page 39), Importing Files (on page 40), and Saving Files (on page 55).

Support

- 1/8/16/24/32 bpp.
- RLE and uncompressed.
- Windows and OS/2.

Copyright © Right Hemisphere 2007. All Rights Reserved.

Windows Cursor File (.cur)

You can view Windows Cursor File (.cur) files.

For further information on using files, please see Opening Files (on page 39), Importing Files (on page 40), and Saving Files (on page 55).

Windows Icon File (.ico)

You can view Windows Icon File (.ico) files.

For further information on using files, please see Opening Files (on page 39), Importing Files (on page 40), and Saving Files (on page 55).

Windows Metafile (.wmf)

You can view Microsoft Windows Metafile format (.wmf) files.

The .wmf file format (WMF) is used to store vector and bitmap-format image data. WMF is the native vector file format for the Microsoft Windows operating environment. WMF files are actually a collection of GDI (Graphics Device Interface) function calls also native to the Windows environment. When a WMF file is 'played back' (typically using the Windows PlayMetaFile() function) the graphics are rendered. WMF files are device-independent and have no limit to their size.

For further information on using files, please see Opening Files (on page 39), Importing Files (on page 40), and Saving Files (on page 55).

Windows Run Length Encoded Bitmap (.rle)

You can view Windows Run Length Encoded Bitmap (.rle) files.

The .rle file format (Windows RLE Bitmap) is for compressing run-length encoded (RLE) bitmaps and is developed by Microsoft. The format uses 4 bits per pixel and 8-bits per pixel and the compression reduces the disk and memory storage required for a bitmap.

For further information on using files, please see Opening Files (on page 39), Importing Files (on page 40), and Saving Files (on page 55).

Copyright © Right Hemisphere 2007. All Rights Reserved.

Appendix B: 3D File Formats

The following 3D file formats are supported by Deep Exploration CAD and Standard Editions and Deep Server. This list is organized alphabetically by file format.

File Format	Type	Extension	View/ Import	Export	Version/Notes
Autodesk 3D Studio	Scene	3DS	Yes (on page 480)	Yes (on page 481)	
Autodesk 3D Studio ASCII	Scene	ASC	Yes (on page 479)	Yes (on page 479)	
Autodesk 3D Studio Max ASCII	Scene	ASE	Yes (on page 482)		
Autodesk 3D Studio Project	Scene	PRJ	Yes (on page 482)		
AOFF File Format	Scene	GEO	Yes (on page 478)	Yes (on page 478)	
Caligari trueSpace Object	Scene	COB	Yes (on page 483)	Yes (on page 484)	
Caligari trueSpace Scene	Scene	SCN	Yes (on page 485)		
CINEMA 4D	Scene	C4D	Yes (on page 485)		Version 5.0.
Collada	Scene	DAE	Yes (on page 486)	Yes (on page 487)	
DirectX Model	Scene	X	Yes (on page 489)	Yes (on page 488)	
FiLMBOX	Scene	FBX	Yes (on page 490)	Yes (on page 490)	
Google SketchUp Document	Scene	SKP	Yes (on page 491)	Yes (on page 492)	Version 5.0.295.
HTML Document with 3D	Scene	HTML		Yes (on page 493)	Must be viewed with either Deep Publish or Deep View (on page 183).
Imagine Geometry	Scene	IOB	Yes (on page 494)		
ISO G Code Files	Scene	ISO, NC	Yes (on page 494)		
LightWave 3D and Binary Object	Scene	LWO, LW	Yes (on page 496)*	Yes (on page 495)**	*Import: LightWave 5.6, 6.0, 7.0, 7.5. **Export: LightWave 5.6 + .uv files and LightWave 6.0 objects only.
LightWave Scene	Scene	LWS	Yes (on page 498)	Yes (on page 497)	
Max File	Scene	MAX	Yes (on page 501)	Yes (on page 499)	Versions 4.0 - 9. Requires 3ds Max and the DCOM plugin to be installed (on page 427).
Maya ASCII Scene	Scene	MA	Yes (on page 504)	Yes (on page 503)	Versions 3.0, 4.0, 4.5, 5.0, 6.0, 7.0, 8.0, 8.5. Requires Maya to be installed.
Maya Binary Scene	Scene	MB	Yes (on page 507)	Yes (on page 506)	Versions 3.0, 4.0, 4.5, 5.0, 6.0, 7.0, 8.0, 8.5. Requires Maya to be installed.
Nendo	Scene	NDO	Yes (on page 508)		Versions 1.0 and 1.1.
Object File Format Vector Graphics	Scene	OFF	Yes (on page 508)	Yes (on page 508)	

Copyright © Right Hemisphere 2007. All Rights Reserved.

File Format	Type	Extension	View/ Import	Export	Version/Notes
Open Inventor File	Scene	IV	Yes (on page 509)	Yes (on page 509)	
OpenFlight Scene Description Database	Scene	FLT	Yes (on page 510)*	Yes (on page 511)	Version 13.0. *Import: Multigen API DLLs not required.
OpenGL CPP Code	Scene	CPP		Yes (on page 512)	
Points File	Scene	PTS	Yes (on page 514)		
Polygon Model Format	Scene	PLY	Yes (on page 514)		
Portable Graymap Graphics File	Scene	PGM	Yes (on page 514)		16-bit
POV-Ray RAW Triangle Format	Scene	RAW	Yes (on page 515)	Yes (on page 515)	
Power Render Object	Scene	PRO	Yes (on page 515)		Version 2.5.
Protein Data Bank	Scene	PDB	Yes (on page 516)		Version 2.5.
Quake Character Model I	Scene	MDL	Yes (on page 518)		Version 6.
Quake Character Model II	Scene	MD2	Yes (on page 518)*		
Quake Character Model III	Scene	MD3	Yes (on page 519)*		
Quake Map	Scene	MAP	Yes (on page 519)		
Quicktime 3D Metafile	Scene	3DM, 3DMF	Yes (on page 519)		No support for 3DM files generated using Chem3D.
RAX Extended RAW Triangles	Scene	RAX	Yes (on page 520)		
Rhinoceros 3D Model	Scene	3DM	Yes (on page 522)	Yes (on page 521)	Versions 1.0, 2.0, 3.0, 4.0. No support for 3DM files generated using Chem3D.
Right Hemisphere Binary	Scene	RH	Yes (on page 523)	Yes (on page 523)*	Export: Version 3.5 and 4.0.
Shockwave 3D File	Scene	W3D		Yes (on page 525)	
Shockwave Web Page	Scene	HTML		Yes (on page 526)	Requires Shockwave Player to be installed (on page 183).
Silo3D	Scene	SIA	Yes (on page 527)	Yes (on page 527)	Version 1.0 only
SOFTIMAGE|XSI	Scene	XSI	Yes (on page 528)*	Yes (on page 528)**	*Import: Versions 1.0, 3.0, 3.5. **Export: Versions 3.0 and 3.5.
Stereolithography File	Scene	STL	Yes (on page 530)	Yes (on page 531)	
Universal 3D	Scene	U3D	Yes (on page 534)	Yes (on page 532)	
VRML Worlds	Scene	WRL, VRML	Yes (on page 536)*	Yes (on page 535)**	*Import: Versions 1.0 and 2.0 ASCII only. **Export: Version 2.0.
Wavefront Object	Scene	OBJ	Yes (on page 539)	Yes (on page 538)*	
XAML	Scene	XAML		Yes (on page 540)	

Copyright © Right Hemisphere 2007. All Rights Reserved.

AOFF File Format (.geo)

You can view AOFF (.geo) files.

The .geo file format is similar to .off files except there is no header in .off files and the points are numbered with 1, instead of 0.

For further information on using files, please see Opening Files (on page 39), Importing Files (on page 40), and Saving Files (on page 55).

AOFF File Format Export (.geo)

You can save files to the AOFF file (.geo) format.

The .geo file format is similar to .off files except there is no header in .off files and the points are numbered with 1, instead of 0.

For further information on using files, please see Opening Files (on page 39), Importing Files (on page 40), and Saving Files (on page 55).

Copyright © Right Hemisphere 2007. All Rights Reserved.

Autodesk 3D Studio ASCII (.asc)

You can view Autodesk 3D Studio ASCII (.asc) files.

The .asc file format is an easily readable, easily parsable ASCII-format - created by Discreet for the 3ds Max application.

For further information on using files, please see Opening Files (on page 39), Importing Files (on page 40), and Saving Files (on page 55).

Support

- Animation.
- Diffuse, specular, ambient color.
- Information on objects, materials, cameras and light sources is supported. All other information is ignored.
- Light sources.
- Materials.
- Smooth groups are read, but are not used.
- Texture Map names.
- The current application smooth angle is used.
- Three-dimensional objects (mesh) are read: name, top, side, local matrix, texture coordinates, and materials are used.

Autodesk 3D Studio ASCII Export (.asc)

You can save files to the Autodesk 3D Studio ASCII (.asc) format.

The .asc file format is an easily readable, easily parsable ASCII-format - created by Discreet for the 3ds Max application.

For further information on using files, please see Opening Files (on page 39), Importing Files (on page 40), and Saving Files (on page 55).

Limitations

- Emissive color (on page 58) is not supported for materials.

Copyright © Right Hemisphere 2007. All Rights Reserved.

Autodesk 3D Studio Import (.3ds)

You can import and view Autodesk 3D Studio (.3ds) files.

The .3ds file format is the native format for Autodesk's 3ds Max application. 3ds Max is a 3D modeling, animation, and rendering solution used to create 3D animation for game development, design visualization, feature film and television effects, and education. Additionally, it is the industry standard for transferring models between 3D programs, or for storing models for 3D resource catalogs.

For further information on using files, please see Opening Files (on page 39), Importing Files (on page 40), and Saving Files (on page 55).

X-Axis Transformation

3DS files may have had an X-axis mirror transform applied to objects in 3ds Max. This is called 'bad parity'; a term used by the company that created the .3ds file format - Discreet. Failure to detect this transformation means that objects may appear in the wrong position within a scene.

The Import Properties dialog includes an option to fix objects with bad parity (mirror transforms); this is selected by default for all .3ds files.

Support

- 3D objects (mesh): name, top, side, local matrix, texture coordinates, and any materials that are used.
- Animation.
- All other information is excluded from import.
- Cameras.
- Light sources.
- Materials: name, diffuse color, specular color, ambient color, texture map names.
- Only 8 character texture paths supported.

Interface

Common—Used to establish the common settings.

- **Import keyframe data**—Imports keyframe animation data.
- **Import animation**—Imports the animation.
- **Repair mirror transformed objects**—Repairs object data that have 'bad parity'. That is, files that have had an X-axis mirror transform applied to objects in 3ds Max. We recommend leaving this option selected, and only disable it if your scene contains animated objects which appear incorrectly positioned when any bad parity is corrected.

Copyright © Right Hemisphere 2007. All Rights Reserved.

Autodesk 3D Studio Export (.3ds)

You can save files to the Autodesk 3D Studio (.3ds) format.

The .3ds file format is the native format for Autodesk's 3ds Max application. 3ds Max is a 3D modeling, animation, and rendering solution used to create 3D animation for game development, design visualization, feature film and television effects, and education. Additionally, it is the industry standard for transferring models between 3D programs, or for storing models for 3D resource catalogs.

For further information on using files, please see Opening Files (on page 39), Importing Files (on page 40), and Saving Files (on page 55).

Texture Paths

3DS files have a very limited capability to store texture paths (only 8 characters). Therefore, if you have a 3D object in another format with long texture pathnames, converting it to .3ds makes the textures disappear. To resolve this, you should move all textures to the directory that contains the model.

For example a Maya file that is in C:\Documents and Settings\[user name]\My Documents\maya\projects\default\scenes would have its textures in C:\Documents and Settings\[user name]\My Documents\maya\projects\default\images. If this Maya file was converted to a .3ds file the texture paths would be lost as they are too long.

Support

- Animation.
- Converts all textures to 2D bitmap formats.
- If an object has more than 65535 polygons, vertices, and texture coordinates, it is split into sub-objects.
- Only 8 character texture paths supported.
- Scenes are saved as smoothed triangle meshes.
- Texture coordinates are saved along with the triangular meshes if texture data exists.

Interface

General—Used to establish the common settings.

- **Texture coordinates**—Saves the texture coordinates (u,v) that are assigned to the polygon's vertices.
- **Remove UV scale and offset from materials**—Removes the 'Offset U and V (on page 352)' settings and sets the 'Scale U and V (on page 352)' settings to 1.
- **Export hierarchy information**—Saves the object's hierarchical relationships in the file.
- **Export smooth groups data**—Creates and saves smoothing groups in the file. That is, the objects do not appear faceted when rendered.
- **Export local matrix**—Saves the object's transformation and identity matrices.
- **Export lights**—Saves the light objects in the file.
- **Export cameras**—Saves the camera objects in the file.
- **Export default camera**—Saves the default camera in the file.

Copyright © Right Hemisphere 2007. All Rights Reserved.

Autodesk 3D Studio Max ASCII (.ase)

You can view Autodesk 3D Studio Max ASCII (.ase) files.

The .ase file format is an easily readable, easily parsable ASCII-format - created by Discreet for the 3ds Max application.

For further information on using files, please see Opening Files (on page 39), Importing Files (on page 40), and Saving Files (on page 55).

Support

- Animation.
- Cameras.
- GEOMOBJECT objects are loaded as a mesh object. If a material is not defined then the material 'wire color' is created and assigned to the object.
- SHAPEOBJECT objects: All lines are converted to polylines and the default application material is used.

Limitations

- Decomposed matrices are not read (.ase vertices are already in world coordinates).
- Mesh smoothing is ignored.

Autodesk 3D Studio Project Import (.prj)

You can import and view Autodesk 3D Studio Project (.prj) files.

The .prj file format is used by Autodesk's 3ds Max application for Project data.

For further information on using files, please see Opening Files (on page 39), Importing Files (on page 40), and Saving Files (on page 55).

Interface

Import key frame data—Imports keyframe animation data.

Import animation—Imports the animation.

Repair mirror transformed objects—Repairs object data that have 'bad parity'. That is, files that have had an X-axis mirror transform applied to objects in 3ds Max. We recommend leaving this option selected, and only disable it if your scene contains animated objects which appear incorrectly positioned when any bad parity is corrected.

Copyright © Right Hemisphere 2007. All Rights Reserved.

Caligari trueSpace Object Import (.cob)

You can import and view Caligari trueSpace Object (.cob) files (both ASCII and binary).

The .cob file format is a 3D object format generated by trueSpace, a 3D design package from Caligari Corporation. trueSpace has become the 3D design program of choice for artists who are creating complex new objects and avatars for use in Active Worlds.

Both ASCII and binary formats encode the same information and have the same general layout. ASCII files are edited in a text editor while binary files are smaller and faster for programs to load and save.

For further information on using files, please see Opening Files (on page 39), Importing Files (on page 40), and Saving Files (on page 55).

Support

- Binary and ASCII with animation support.
- Cameras.
- The following chunks are read: POLH, GROU, MAT1, Mbal, Nurb, NMes, Lght, Came, Chan, Hidn, Vews, ROpt.

Interface

Common—Used to establish the common settings.

- **Join equal materials**—Only unique materials are created and any redundant materials are removed. All objects pointing to any removed materials are re-pointed to a new, unique material definition. This is useful when importing Caligari files since trueSpace assigns a different material definition to each and every object, even if the materials use the same parameters. Note that this option removes the redundant materials.
- **Import animation**—Imports the animation sequence from the trueSpace file.

Copyright © Right Hemisphere 2007. All Rights Reserved.

Caligari trueSpace Object Export (.cob)

You can save files to the Caligari trueSpace Object (.cob) format.

The .cob file format is a 3D object format generated by trueSpace, a 3D design package from Caligari Corporation. trueSpace has become the 3D design program of choice for artists who are creating complex new objects and avatars for use in Active Worlds.

Both ASCII and binary formats encode the same information and have the same general layout. ASCII files are edited in a text editor while binary files are smaller and faster for programs to load and save.

For further information on using files, please see Opening Files (on page 39), Importing Files (on page 40), and Saving Files (on page 55).

Support

- All geometry and material attributes.
- Binary and ASCII with animation support.
- Textures are exported to the selected file type.
- trueSpace versions 3.0 and 4.0.

Interface

Common—Used to establish the common settings.

- **ASCII mode**—Saves an ASCII .cob file. Otherwise, a binary .cob file is saved. Note that the binary file is significantly smaller than the ASCII file.
- **Rescale**—Used to establish whether to rescale the model.
  - **Rescale**—Rescales the model to the value entered in the 'Percent of workplace' field.
  - **Percent of workplace**—Determines the percentage of the trueSpace workplace to which to rescale the model. We recommend using the 'Fit to' option in the Geometry Transform tab to rescale the model and not this modifying this option.
- **Move objects axis to object center**—Moves the object's axis to the center of each object.

Copyright © Right Hemisphere 2007. All Rights Reserved.

Caligari trueSpace Scene Import (.scn)

You can import and view Caligari trueSpace Scene (.scn) files.

The .scn file format was developed by Caligari trueSpace. Both ASCII and binary formats encode the same information and have the same general layout. ASCII files are edited in a text editor while binary files are smaller and faster for programs to load and save.

For further information on using files, please see Opening Files (on page 39), Importing Files (on page 40), and Saving Files (on page 55).

Support

- Binary and ASCII with animation support.
- Cameras.
- Chunks: POLH, GROU, MAT1, Mbal, Nurb, NMes, Lght, Came, Chan, Hidn, Vews, ROpt.

Interface

Common—Used to establish the common settings.

- **Join equal materials**—Only unique materials are created and any redundant materials are removed. All objects pointing to any removed materials are re-pointed to a new, unique material definition. This is useful when importing Caligari files since trueSpace assigns a different material definition to each and every object, even if the materials use the same parameters. Note that this option removes the redundant materials.
- **Import animation**—Imports the animation sequence from the trueSpace file.

CINEMA 4D (.c4d)

You can view CINEMA 4D (.c4d) files.

The .c4d file format is the native file format for the CINEMA 4D application developed by MAXON.

The original scene hierarchy is completely recreated, including all groupings and their related transformations.

For further information on using files, please see Opening Files (on page 39), Importing Files (on page 40), and Saving Files (on page 55).

Support

- Both (u,v) texture coordinates are read correctly. In later versions, this conversion is enhanced.
- You can only view the mesh geometry and materials.

Copyright © Right Hemisphere 2007. All Rights Reserved.

Collada File Import (.dae)

You can import and view Collada (.dae) files.

For further information on using files, please see Opening Files (on page 39), Importing Files (on page 40), and Saving Files (on page 55).

Limitations

- Support for skin & bone animation is not addressed at present.
- Mapping of light parameters between COLLADA and Deep Exploration is not direct.
- Mapping of camera parameters between COLLADA and Deep Exploration is not direct.

Interface

General

- **Join equal points**—Multiple vertices with identical coordinates are replaced by a single instance in the data-set, removing redundancy.
- **Remove duplicate material**—Multiple identical instances of a material are replaced in the Scene Tree by a single instance.

OK—Closes the dialog. Any changes made to the settings are saved.

Cancel—Closes the dialog. Any changes made to the settings are lost.

Help—Opens the relevant Help topic.

Copyright © Right Hemisphere 2007. All Rights Reserved.

Collada File Export (.dae)

You can save files to the Collada file (.dae) format.

For further information on using files, please see Opening Files (on page 39), Importing Files (on page 40), and Saving Files (on page 55).

Support

- Mesh import
- Materials
- Lights
- UV texture mapping
- Cameras
- Animation (translate and rotate only)

Limitations

- Support for skin & bone animation is not addressed at present.
- Mapping of light parameters between COLLADA and Deep Exploration is not direct.
- Mapping of camera parameters between COLLADA and Deep Exploration is not direct.
- No tessellation control.
- No assembly hierarchy supported.
- No BOM support based on part names.
- Import/export of simple animated scaling not yet supported.
- Files greater than 2MB lose geometry or show rogue facets, problem mainly occurs with models having greater than 22K facets.
- Image files (.jpg typically) present within .rh files are not exported to Collada file format.

Copyright © Right Hemisphere 2007. All Rights Reserved.

DirectX Model Export (.x)

You can save files to the DirectX Model file (.x) format.

The DirectX file format provides a rich, template-driven format that enables the storage of meshes, textures, animations, and user-definable objects. Hierarchies are used to express relationships between data records.

This format is used natively by the Microsoft Direct3D Retained Mode API, providing support for reading pre-defined objects into the application or for writing mesh information constructed by the application in real time. It provides low-level data primitives upon which applications define higher-level primitives through templates. This is the method by which Direct3D Retained Mode defines higher-level primitives such as vectors, meshes, matrices, and colors.

For further information on using files, please see Opening Files (on page 39), Importing Files (on page 40), and Saving Files (on page 55).

Support

- Binary and ASCII with animation support.

Interface

General—Used to establish general settings.

- **ASCII mode**—Saves the model in ASCII mode. Otherwise, the model is saved in binary mode.
- **Export materials**—Saves the mesh object's material attributes in the file. These are exported using the DirectX MeshMaterialList structure.
- **Export templates**—Saves templates in the file. A template is used to establish how the file's data stream is interpreted by the next application to view the file.
- **Add top level frame**—Adds a single frame if more than one frame is without a parent object.
- **Flip coordinate system**—Rotates the model so it uses a left-hand coordinate system. That is, it flips the Y and Z axes.
- **Export skins**—Saves the model's skins in the file.
- **Export empty bones**—Saves the empty bones in the file.
- **Export bones without meshes**—Exports the bone objects excluding the bone's meshes.
- **Export empty nodes**—Saves the empty node in the file.
- **Maximum object name**—Specifies the maximum number of characters in the objects' names.

Geometry—Used to establish geometry settings.

- **Export normals**—Saves face vertex normals in the file. They are exported using the DirectX MeshNormals structure.
- **Invert normals**—Inverts the direction of each vertex normal so that each normal points in the opposite direction.
- **Texture coordinates**—Exports face vertex (u,v) texture coordinates. These are exported using the DirectX MeshTextureCoords structure.
- **Maximum vertices in polygon**—Determines the maximum number of vertices in each polygon in the file.

Copyright © Right Hemisphere 2007. All Rights Reserved.

DirectX Model Import (.x)

You can import and view Direct X Model (.x) files.

The DirectX file format provides a rich, template-driven format that enables the storage of meshes, textures, animations, and user-definable objects. Hierarchies are used to express relationships between data records.

This format is used natively by the Microsoft Direct3D Retained Mode API, providing support for reading pre-defined objects into the application or for writing mesh information constructed by the application in real time. It provides low-level data primitives upon which applications define higher-level primitives through templates. This is the method by which Direct3D Retained Mode defines higher-level primitives such as vectors, meshes, matrices, and colors.

For further information on using files, please see Opening Files (on page 39), Importing Files (on page 40), and Saving Files (on page 55).

Support

- Binary and ASCII with animation support.
- Instancing and hierarchies are also supported. Instancing enables multiple references to an object, such as a mesh, while storing its data only once per file.
- Support for animation sets enables you to store pre-defined paths for playback in real time.
- The DirectX file format supports importing of all templates defined in version 1 of the format.

Limitations

- Compressed files
- Progressive meshes.

Interface

Import animation data—Imports all animation data from the DirectX file.

Use DirectX camera position—Uses the DirectX camera position instead of the default camera position.

Join equal materials—Joins all materials that are identical. For example, if a file contains two identical materials (or mapped images), when this option is checked, then only one material is imported.

Optimize vertices—Reduces the number of vertices in the model by merging all vertices that have equal X, Y, Z coordinates.

Optimize texture points—Reduces the number of texture points in the model by ignoring duplicated texture points.

Flip coordinate system—Rotates the model so it uses a right-hand coordinate system. That is, it flips the Y and Z axes.

Import skins—Imports the object's skins.

Optimize hierarchy—Reduces the number of coordinates in the array of per vertex normals.

Copyright © Right Hemisphere 2007. All Rights Reserved.

FiLMBOX Import (.fbx)

You can import and view FiLMBOX (.fbx) files.

For further information on using files, please see Opening Files (on page 39), Importing Files (on page 40), and Saving Files (on page 55).

Support

- Mesh
- Texture mapping over a mesh
- Material mapping over a mesh
- Normals and color of vertex, mapping over a mesh
- Multiple cameras
- Multiple lights and gobos
- Skeletons
- Multiple takes of animation
- Global camera, light, and time settings

Limitations

- Nurbs, and patches converted to mesh on import / export
- Any type of constraints
- Camera switcher
- Markers
- Bind pose for a list of nodes (bones, mesh, nurbs, patches)
- Rest pose for a list of nodes (bones, mesh, nurbs, patches)

Interface

Common Properties

- **Keyframe resampling FPS**—Sets the keyframe animation resampling rate for import.
- **Use default PATCH triangulate step**—Enable or disable a custom patch triangulate step.
- **PATCH triangulate step**—Sets a custom patch triangulate step for import.
- **Use default NURB triangulate step**—Enable or disable a custom nurb triangulate step.
- **NURB triangulate step**—Sets a custom nurb triangulate step for import.

OK—Closes the dialog. Any changes made to the settings are saved.

Cancel—Closes the dialog. Any changes made to the settings are lost.

Help—Opens the relevant Help topic.

FiLMBOX Export (.fbx)

You can save files to the FiLMBOX file (.fbx) format.

For further information on using files, please see Opening Files (on page 39), Importing Files (on page 40), and Saving Files (on page 55).

Copyright © Right Hemisphere 2007. All Rights Reserved.

Google SketchUp Document Import (.skp)

You can import and view Google SketchUp Document (.skp) files.

Note: A .skb file is produced along with the .skp file, and is an exact copy and backup of the .skp file.

For further information on using files, please see Opening Files (on page 39), Importing Files (on page 40), and Saving Files (on page 55).

Interface

Common—Used to establish the common settings.

- **Outline faces**—Adds an outline around the edges of the model's faces.
- **Import lines into separate hierarchy**—Imports all lines into a single separate group called 'Lines Hierarchy'. This is helpful for controlling line visibility.
- **Lines render order**—Sets the order in which lines are rendered. If the lines are in the same location as a mesh surface, they will compete for rendering priority; if the render order is set to 0, the lines are rendered before the mesh and will be obscured by it. However, if the render order is set to 1 or higher, the lines are rendered after the mesh. This ensure the lines do not look 'broken'.
- **SketchUp tessellation**—Splits every face into triangles.
- **Create default SketchUp material**—Creates a default SketchUp material that appears at the bottom of the Materials list. The material has the following properties:
  - Name: SketchUp Default.
  - Ambient: RGB (30,30,30).
  - Diffuse: RGB (200,200,200).
  - Specular: RGB (0,0,0).
  - Emissive: RGB (0,0,0).
  - Opacity: 100.
  - Glossiness: 20.
  - Specular level: 33.
  - Raytrace reflection: 30.
  - Index of refraction: 1.5.
  - [ ] Double sided.
  - [ ] Outline.
- **Create UVW texture coordinates**—Activating this feature will make transforming to another format correct. UV coordinates allow a rectangular map to be placed neatly onto a rectangular polygon (or two triangles), however, if the map is skewed another coordinate (W) needs to be created to allow interpolation to be correctly interpreted.
- **Create back faces**—In SketchUp every face has two sides, in Deep Exploration faces have only one side (front only), this option solves the translation from one format to the other:
  - **NO**—Ignore backfaces.
  - **As separate node**—Create backfaces as an additional node.
  - **In the same node**—Create backfaces in the same node.

Copyright © Right Hemisphere 2007. All Rights Reserved.

Google SketchUp Document Export (.skp)

You can export Google SketchUp Document (.skp) files.

SketchUp was purchased by Google in 2006. A .skb file is produced along with the .skp file, and is an exact copy and backup of the .skp file.

For further information on using files, please see Opening Files (on page 39), Importing Files (on page 40), and Saving Files (on page 55).

Interface

Common—Used to establish the common settings.

- **Polyline**—option to export additional polylines - thereby simulating how the Sketchup models display (with extra drawn edges).
- **Create back material too**—Sketchup is aware of a back material. An object can have a material on the back as well as the front (which is different), this option indicates if we create this back material, or not, on export.
- **Corner edges are visible**—corner lines and edges are generated by the exporter. These lines will be useful if you intend to look at the model using the Sketchup tool, the default = on.
- **Merge all the coplanar faces**—this option merges the flat faces into a single representation so that all the extra lines are not seen (they are still there but the object is now cleaner to look at), the default = on.
- **Optimize points**—duplicate points will be removed, so providing a smaller object that is more easily editable.

Copyright © Right Hemisphere 2007. All Rights Reserved.

HTML Document with 3D (.html)

You can save files to the HTML Document with 3D (.html) format.

For further information on using files, please see Opening Files (on page 39), Importing Files (on page 40), and Saving Files (on page 55).

HTML Document with 3D Format

When saving to the HTML Document with 3D (.html) format, you can:

- Select a base template to apply to the published scene. These templates are stored in the Deep Exploration 4\Plugins\HTML_Publishing folder. The file properties, as defined in the export dialog when publishing to this format, are remembered for each template.
- Modify the published scene. For example, insert images and add text.
- Create new templates and save them into the Deep Exploration\Plugins\HTML_Publishing folder for use when publishing to HTML. The template name must be unique (from others in this folder) and the template resources folder name should be in the form '<template name>.res'.

Interface

RH Parameters—Used to establish how .rh files are exported.

- **Compress file**—Reduces the model's file size. The image quality is retained.
- **Export animation**—Saves the animation in the .rh file.
- **Export skins**—Saves the model's skins in the .rh file.

HTML—Used to establish how the scene is displayed in the .html file.

- **Template**—Used to select the style of the template to apply to the Web page.
- **License URL**—The location of the site publisher site license key (.rhl file). This is required when publishing 3D content on a Web site. The key contains the name of publisher (a company or personal name), the URL of the site, an identifier (special information to prove the license is valid), and the limitation date (defines the expiration period of the license). If this field is not specified or the .rhl file is not found, the root folder of the Web site is searched. If the license is not found, has expired, or is incorrect, a watermark is displayed in the right, lower corner of the 3D scene Web page.

  Note: The URL must contain the full scene directory address. For example, if a 3D scene is published to http://machine.domain.com:81/scenes/20021022/, this field should contain http://machine.domain.com:81/. This allows access to all scenes by port 81 of machine.domain.com. When the scene is downloaded, this URL is compared with the real URL of the HTML page; they must be identical.

- **Alignment**—Used to determine the position of the model in the Web page.
- **Width**—Determines the width of the frame that contains the model.
- **Height**—Determines the height of the frame that contains the model.

Special Text—Used to add additional text to display in the .html file.

- **Author**—The name to display in the Web page.
- **Title**—The title to display in the Web page.
- **Description**—The description to display in the Web page.

Open scene in browser after export—Opens the HTML scene in the default browser window once the export is complete.

Copyright © Right Hemisphere 2007. All Rights Reserved.

Imagine Geometry (.iob)

You can view Imagine Geometry (.iob) files.

The .iob file format, developed by Impulse Inc, is used in the Imagine application which creates models of objects or character in 3D and allows rendering into 2D pictures, 3D anaglyph and animation sequences.

Note that most polygons in Imagine file scenes have inconsistent orientation. That is, some polygons are oriented clockwise while others are oriented counter-clockwise. To correct this, you can convert all normals to double-sided (on page 272) so that each triangle is created twice - in both clockwise and counter-clockwise orientations.

Note: Imagine files typically have file extensions of .iob, .obj, or no extension at all. This plugin expects that the file extension has been renamed to .iob.

For further information on using files, please see Opening Files (on page 39), Importing Files (on page 40), and Saving Files (on page 55).

Support

- Imports Imagine or TTDDD binary geometry files.
- Only mesh geometry's surface attributes are properly extracted from the file.

ISO G Code Format (.iso, .nc)

You can view ISO G Code Format (.iso, .nc) files.

The .iso file format contains the complete contents of a CD disc or other disk. ISO images are often created to backup a CD or distribute CD's over the Internet or other network. The .nc format are numeric code files.

These formats are based on the ISO 9660 CD-ROM file system standard.

ISO is short for International Organization for Standardization (http://www.iso.org); founded in 1947 the ISO is a worldwide federation of national standards bodies from some 140 countries. The first ISO standard was published in 1951 with the title, 'Standard reference temperature for industrial length measurement'.

The first standard used for data CDs on PC or IBM compatible computers. Unfortunately, in the beginning many manufactures had their own implementation of this loose standard. The ISO 9660 standard is constantly being upgraded and tightened to include new methods. The most important factor of this standard is when having both audio and data on one CD that the data is placed before the audio. This was originally referred to as High Sierra.

For further information on using files, please see Opening Files (on page 39), Importing Files (on page 40), and Saving Files (on page 55).

Copyright © Right Hemisphere 2007. All Rights Reserved.

LightWave 3D Binary and Object Export (.lwo, .lw)

You can save files to the LightWave 3D Binary and Object (.lwo, .lw) formats:

- LightWave 3D Object file format (object file format of LightWave 5.6). Texture coordinates are saved to .uv files.
- LightWave 3D Object file format 2 (object file format of LightWave 6.0). Each object is stored as a separate layer.

For further information on using files, please see Opening Files (on page 39), Importing Files (on page 40), and Saving Files (on page 55).

Support

- Animation including field of view, object transparency, and light colors.

Limitations

- Files with more than 65535 points end faces cannot be saved as version 5.6 of this format.

Interface

Common—Used to establish the common settings.

- **Version**—Saves the file as the selected LightWave version.
- **Export SubDs**—Used to establish subdivision control mesh object settings.
  - **Final mesh**—Creates a highly detailed and a high polygon count mesh.
  - **Control mesh**—Creates a low detailed, low polygon count mesh. This mesh is subdividable.
  - **Control mesh using PTCH chunk**—Creates a low detail, low polygon count mesh. The mesh is structured with the Subdivision patches (PTCH) chunk.
- **LightWave 5.6**—Saves the model as a LightWave version 5.6 file.

  Note: If the file has more than 65535 points end faces, it is automatically saved as version 6.0 of the format regardless of your selection.

  - **Create .uv files**—Creates and saves .uv files.
  - **Export UVs using chunks**—Saves all (u,v) texture coordinates that are assigned to polygon vertices. The UV coordinates are saved according to the UVIM and UVCV chunks.
- **LightWave 6.0**—Saves the model as a LightWave version 6.0 file.
  - **Export UVs**—Saves any (u,v) texture coordinates that are assigned to polygon vertices.
  - **Use discontinuous UVs**—Uses discontinuous (u,v) texture coordinates. That is, additional points are not created for points that have the same UV values.

    Note: We recommend using this for LightWave versions 6.5 and higher.

  - **Export extra maps**—Saves diffuse, bump, specular, and emissions maps.

Copyright © Right Hemisphere 2007. All Rights Reserved.

LightWave 3D Binary and Object Import (.lwo, lw)

You can import and view LightWave 3D Binary and Object (.lwo, .lw) files.

The .lwo and .lw file formats are native formats for the LightWave 3D application developed by Newtek. The .lw file format is the binary from the LightWave 3D application. They are stored on disk as 3D meshes consisting of points, polygons (these can include faces, curves or patches) and surfaces. Files can contain a single connected mesh or several disjointed meshes describing a single logical object. An object file may also contain one or more surface definitions with no mesh.

Deep Exploration uses the following order to search object files:

1. Folder of .scn file.
2. Content folders.
3. Several last folders, specified when failed to find file occurs.
4. Prompt from user.

Note: When you import a .lw or .lwo file, you must add the locations of the associated images (on page 294) used in the file.

For further information on using files, please see Opening Files (on page 39), Importing Files (on page 40), and Saving Files (on page 55).

Support

- All possible surface information, including smoothing, glossiness and color, are converted.
- Layers are read as separate objects.
- Surface details and one-point polygons are not converted.
- The following types of LightWave 3D objects:
  - LightWave object file.
  - LightWave layered object file.
  - LightWave 6.0 object file.
- Two-point polygons are converted to lines.
- UView files.

Interface

Create sub-objects by material names—Converts each LightWave object into a separate sub-object. This conversion is based on the surface (material) names assigned to the object's polygons.

Create texture coordinates—Converts LightWave texture projection methods (including planar, spherical, cylindrical and cubical) into UV texture coordinates. The LightWave texture projection methods are used to map textures onto objects. The type of mapping used should match the shape of the object. For example, cube mapping is used on box-shaped objects.

Check wrapping—Attempts to remove the Wrap bug in spherical and cylindrical projection methods.

Import .uv files—Imports objects from UView files. These are UV texture coordinate files that are created by UView/Lightwave.

Import SubDs—Imports and displays the subdivision control mesh objects on a simple mesh. Otherwise, only the simple mesh is displayed.

Copyright © Right Hemisphere 2007. All Rights Reserved.

LightWave Scene Export (.lws)

You can save files to the LightWave Scene file (.lws) format.

For further information on using files, please see Opening Files (on page 39), Importing Files (on page 40), and Saving Files (on page 55).

Support

- Animation including field of view, object transparency and light colors.

Interface

Version—Saves the file as the selected LightWave version.

- **LightWave 5.6**—Saves the model as a LightWave version 6.0 file.
- **LightWave 6.0**—Saves the model as a LightWave version 6.0 file.

Export single layered object—Exports the objects in a single layer. That is, if a model contains more than one layer, these layers are combined to create a single layer.

Export skins—Saves the skin information in the file. This option is only valid for LightWave versions 6.5 and higher.

Export one object instance—Exports one copy of each object in the scene. For example, when a model contains four identical objects, only one object is exported and used four times.

Export viewport—Saves the current view in the file.

Copy objects to folder—Copies the objects to the specified folder.

Use prefix—Determines a URL prefix for bitmaps assigned to objects in the scene.

Copyright © Right Hemisphere 2007. All Rights Reserved.

LightWave Scene Import (.lws)

You can import and view LightWave Scene (.lws) files. Deep Exploration can read the following types of .lwo objects:

- LightWave object file.
- LightWave layered object file.
- LightWave 6.0 object file.

LightWave scene files are much like to CAD assembly files; CAD assembly files reference associated part files to create the scene. Similarly, .lws files reference .lwo and .lw files to create the scene, and these associated .lwo and .lw files reference various image files. Therefore, when you import a .lws file, you must add the locations of the folders through which Deep Exploration searches for the associated .lwo and .lw files (content folders). You must also add the locations of the images (on page 294) used in the associated files.

For further information on using files, please see Opening Files (on page 39), Importing Files (on page 40), and Saving Files (on page 55).

Supported

- Animation, camera animation, and several envelopes.
- All cameras and most light types.
- LightWave 5.6 and 6.0 scene files.
- The object hierarchy, within the original LightWave file is recreated exactly within this application.

Interface

Optimize materials—Reduces the number of materials that are imported by ignoring any duplicated materials.

Content folders—The locations of the folders through which Deep Exploration searches for the associated .lwo and .lw files.

Copyright © Right Hemisphere 2007. All Rights Reserved.

Max File Export (.max)

You can save files to the Max (.max) format.

The .max file format was developed by Autodesk for the 3ds Max application. 3ds Max is a 3D modeling, animation, and rendering solution used to create 3D animation for game development, design visualization, feature film and television effects, and education.

For further information on using files, please see Opening Files (on page 39), Importing Files (on page 40), and Saving Files (on page 55).

Support

- Cameras.
- Associated material .mli files (on page 556).

Interface

General—Used to establish the common settings.

- **Triangulate**—Converts all polygons, if polygon faces has three or more sides, to triangles.
- **Export normals**—Exports all surface normals. Using this option creates larger files.

  Note: This option is only available for 3ds Max 6 and higher.

- **SubD mode**—Used to establish subdivision control mesh object settings.
  - **Export final mesh**—Creates a highly detailed and a high polygon count mesh.
  - **Export control mesh**—Creates a low detailed, low polygon count mesh. This mesh is subdividable.
- **Export skins**—Saves the skin information to the .max file. This option is only valid if there is skin information.
- **Export lights**—Saves the light objects in the file.
- **Export cameras**—Saves the camera objects in the file.
- **Export default camera**—Saves the default camera in the file.
- **Hide dummy nodes**—Displays or hides dummy nodes.
- **Group mode**—You can open and close groups to access the individual objects contained in them without dissolving the group. These commands maintain the integrity of the group:
  - **Create as opened**—Temporarily opens the group so that you can access its member objects. While a group is open, you can treat the objects (or nested groups) as individuals. You can transform them, apply modifiers, and access their modifier stacks.
  - **Create as closed**—Restores the group when you are finished working with the individual objects.
  - **Do not create**—Creates no groups.

Installation Options—Instructions on how to install the Autodesk 3ds Max plugin.

Geometry Transform

The Geometry Transform tab is used to transform (rotate, position, and scale) the scene along the X, Y, and Z axes (see Geometry (on page 56) tab).

Animation

The Animation tab is used to define the animation export properties for the selected file format (see Animation (on page 56) tab).

Copyright © Right Hemisphere 2007. All Rights Reserved.

Texture Maps

The Texture Maps tab is used to define the export properties for the selected file format's textures (see Texture Maps (on page 59) tab).

Materials

The Materials tab is used to define the export properties for the selected file format's materials (see Materials (on page 58) tab).

Copyright © Right Hemisphere 2007. All Rights Reserved.

Max File Import (.max)

You can import and view Max (.max) files.

The .max file format was developed by Autodesk for the 3ds Max application. 3ds Max is a 3D modeling, animation, and rendering solution used to create 3D animation for game development, design visualization, feature film and television effects, and education.

When opening a .max file with Deep Server, the 3ds Max application must be installed and Deep Server must be run as a foreground application on all server farm computers.

For further information on using files, please see Opening Files (on page 39), Importing Files (on page 40), and Saving Files (on page 55).

Units

3ds Max utilizes 'master units' when exporting .max files; 3ds Max automatically re-scales .max files if they were created using a differing unit of measurement than the current master unit measurement. For example, if a file is measured in centimetres, and the current master unit measurement is inches, the file is rescaled into inches.

The unit measurement cannot be determined or changed before or after importing. Therefore, when importing files of this nature, a Units Mismatch dialog is displayed.

The 3ds Max current master unit measurement is used as the units of measurement in Right Hemisphere applications for each imported file. For example, if you have two models with the first being a 1cm x 1cm x 1cm cube called 'cube_cm.max', and the second being a 1" x 1" x 1" cube called 'cube_inches.max', the following is true.

1. If the master unit measurement was inches when the models were exported, the Right Hemisphere application's units of measurement is inches:
   - When you import cube_cm.max into the Right Hemisphere application, the cube size will be 0.393701 x 0.393701 x 0.393701. (2.54*0.393701= 1).
   - When you import cube_inches.max into the Right Hemisphere application, the cube size will be 1 x 1 x 1.
2. If the master unit measurement was centimetres when the models were exported, the Right Hemisphere application's units of measurement is centimetres:
   - When you import cube_cm.max, the cube size will be 1 x 1 x 1.
   - When you import cube_inches.max, the cube size will be 2.54 x 2.54 x 2.54.

Support

- Cameras.
- Associated materials are imported as .mli files (on page 556).

Interface

Apply pivot data to nodes—If this option is selected, then the pivot points set in the 3ds Max file are imported into Deep Exploration, however, if you do not have this option set then Deep Exploration will reset the pivot to the bottom centre of the object. In other words, pivot points that are associated with a 3ds Max file are translated as additional nodes in the scene hierarchy.

Convert NURBS to mesh—Changes NURBS surfaces to a polygon mesh.

Convert patches to mesh—Changes patch objects to a polygon mesh.

Use skin modifiers—Imports all skin, weights, and bones information including any Character Studio information.

Copyright © Right Hemisphere 2007. All Rights Reserved.

Note: This option is also only available with 3ds Max versions 3.x and 4.x. If you are using version 5. and 6.0, please use the 'Use vertex animation' option to import all modifier information.

Import animation—Imports all animation currently in the scene.

Use morph modifiers—Imports only 'Morpher' modifier information. This option is not available if you select the 'Sample vertex animation' option.

Sample object animation—If selected, imports all animation modifier information, including morph information, by sampling the objects' matrix at the frame rate specified in the 'Sample animation every frame' option. If not selected, imports all animation information by parsing the TCB and LINEAR animation tracks.

Note: Any track that is not TCB or LINEAR is not parsed and the object contains no animation. We recommend using the 'Sample object animation' option to import animation information.

Use vertex animation—Imports all animation modifier information, including morph information, by sampling the mesh vertices at the specified frame rate. This is helpful for meshes that are deformed with animated modifiers For example, Bend and Twist.

Note: This option reduces the file import speed performance.

- **Sample animation every [number] frames**—Determines the rate at which the vertex and/or matrix animation is sampled. That is, this rate is also used when the 'Sample matrix animation' option is selected.

Note: If the 'Import animation' and 'Sample objects animation' options are both selected, the vertices and matrix are sampled simultaneously according to the frame rate you enter.

Installation Options—Opens the 3D Studio MAX DCOM Plugin Installation dialog to install the 3ds Max plugin.

Copyright © Right Hemisphere 2007. All Rights Reserved.

Maya ASCII Scene Export (.ma)

You can save files to the Maya ASCII Scene (.ma) file format.

Note: You must have the Maya application installed for this functionality to be enabled.

Note: Without the environment variable a message will appear in DE when a user attempts to open a Maya8.5 file saying the variable does not exist. These are the steps to create the environment variable:

1. Windows Start > Settings > Control Panel > System > Advanced > Environment Variables

2. Under "System Variables" click "New".

3. Set the Variable name to "MAYA_LOCATION"

4. Set the Variable value to the Maya8.5 install location. E.g. C:\Program Files\Autodesk\Maya8.5

5. Restart Deep Exploration for this change to take affect.

For further information on using files, please see Opening Files (on page 39), Importing Files (on page 40), and Saving Files (on page 55).

Support

- Cameras.

Limitations

- When exporting from Maya to RH format the following options are not supported:
  - Procedural textures.
  - Layered textures and shaders.
  - 3rd party shaders.
  - Area and volume lights.
  - Light decay.
  - Subdivision surfaces.
  - Lattice deformer.
  - Deformers animation.
  - Animated visibility.

Interface

Select Maya Installation—Used to select the version of Maya with which to import the file. This is active when more than one version of Maya is installed.

Export skin—Exports the model's skins.

Swap Y and Z axes—Switches the Y axis with the Z axis.

Maximum vertices in polygon—Sets the number of vertices in a polygon, minimum 3, maximum 65536.

Mark surfaces as double-sided—Sets surfaces as double-sided.

Tessellate NURBS—Default value Yes. This option indicates whether or not to tessellate NURBS while exporting to Maya format.

Material type—Used to establish the type of material shading with which to save the model.

Copyright © Right Hemisphere 2007. All Rights Reserved.

- **Phong**—Exports the model's materials using Phong material shading.
- **Blinn**—Exports the model's materials using Blinn material shading.

Up axis—Used to select the 'up' axis.

- **Y**—Uses the Y axis as the 'up' axis.
- **Z**—Uses the Z axis as the 'up' axis.

Maya ASCII Scene Import (.ma)

You can import and view Maya ASCII Scene (.ma). Note that you must have the Maya application installed to enable this functionality.

Note: You must have the Maya application installed for this functionality to be enabled.

Note: Without the environment variable a message will appear in DE when a user attempts to open a Maya8.5 file saying the variable does not exist. These are the steps to create the environment variable:

1. Windows Start > Settings > Control Panel > System > Advanced > Environment Variables

2. Under "System Variables" click "New".

3. Set the Variable name to "MAYA_LOCATION"

4. Set the Variable value to the Maya8.5 install location. E.g. C:\Program Files\Autodesk\Maya8.5

5. Restart Deep Exploration for this change to take affect.

When opening Maya files in Deep Server, the Maya application must be installed on all server farm computers.

For further information on using files, please see Opening Files (on page 39), Importing Files (on page 40), and Saving Files (on page 55).

Support

- Keyframe animation. That is, moving, rotating, scaling, and morphing. For example, a morph 'BlendShape' deformer.
- NURBS and SubDs.
- Cameras.

Limitations

- Deformations.

Interface

Select Maya Installation—Used to select the version of Maya with which to import the file. This is active when more than one version of Maya is installed.

Tessellate NURBS—Establishes the arrangement and density of the NURBS.

Import lights—Imports all lights.

Import perspective camera—Imports the perspective cameras.

Import cameras—Imports the scene cameras.

Import animation—Imports all animation.

Copyright © Right Hemisphere 2007. All Rights Reserved.

- **Sample animation every [number] frames**—Determines the rate at which the animation is sampled when importing the file, minimum1 maximum 100.

Up axis—Used to select the 'up' axis.

- **Y**—Uses the Y axis as the 'up' axis.
- **Z**—Uses the Z axis as the 'up' axis.

Copyright © Right Hemisphere 2007. All Rights Reserved.

Maya Binary Scene Export (.mb)

You can save files to the Maya Binary Scene (.mb) file format.

Note: You must have the Maya application installed for this functionality to be enabled.

Note: Without the environment variable a message will appear in DE when a user attempts to open a Maya8.5 file saying the variable does not exist. These are the steps to create the environment variable:

1. Windows Start > Settings > Control Panel > System > Advanced > Environment Variables

2. Under "System Variables" click "New".

3. Set the Variable name to "MAYA_LOCATION"

4. Set the Variable value to the Maya8.5 install location. E.g. C:\Program Files\Autodesk\Maya8.5

5. Restart Deep Exploration for this change to take affect.

For further information on using files, please see Opening Files (on page 39), Importing Files (on page 40), and Saving Files (on page 55).

Support

- Cameras.

Interface

Select Maya Installation—Used to select the version of Maya with which to import the file. This is active when more than one version of Maya is installed.

Export skin—Exports the model's skins.

Swap Y and Z axes—Switches the Y axis with the Z axis.

Maximum vertices in polygon—Sets the number of vertices in a polygon, minimum 3, maximum 65536.

Mark surfaces as double-sided—Sets surfaces as double-sided.

Tessellate NURBS—Default value Yes. This option indicates whether or not to tessellate NURBS while exporting to Maya format.

Material type—Used to establish the type of material shading with which to save the model.

- **Phong**—Exports the model's materials using Phong material shading.
- **Blinn**—Exports the model's materials using Blinn material shading.

Up axis—Used to select the 'up' axis.

- **Y**—Uses the Y axis as the 'up' axis.
- **Z**—Uses the Z axis as the 'up' axis.

Copyright © Right Hemisphere 2007. All Rights Reserved.

Maya Binary Scene Import (.mb)

You can import and view Maya Binary Scene (.mb) files. Note that you must have the Maya application installed to enable this functionality.

Note: You must have the Maya application installed for this functionality to be enabled.

Note: Without the environment variable a message will appear in DE when a user attempts to open a Maya8.5 file saying the variable does not exist. These are the steps to create the environment variable:

1. Windows Start > Settings > Control Panel > System > Advanced > Environment Variables

2. Under "System Variables" click "New".

3. Set the Variable name to "MAYA_LOCATION"

4. Set the Variable value to the Maya8.5 install location. E.g. C:\Program Files\Autodesk\Maya8.5

5. Restart Deep Exploration for this change to take affect.

When opening Maya files in Deep Server, the Maya application must be installed on all server farm computers.

For further information on using files, please see Opening Files (on page 39), Importing Files (on page 40), and Saving Files (on page 55).

Support

- Keyframe animation. That is, moving, rotating, scaling, and morphing. For example, a morph 'BlendShape' deformer.
- NURBS and SubDs.
- Cameras.

Limitations

- Deformations.

Interface

Select Maya Installation—Used to select the version of Maya with which to import the file. This is active when more than one version of Maya is installed.

Tessellate NURBS—Establishes the arrangement and density of the NURBS.

Import lights—Imports all lights.

Import perspective camera—Imports the perspective cameras.

Import cameras—Imports the scene cameras.

Import animation—Imports all animation.

- **Sample animation every [number] frames**—Determines the rate at which the animation is sampled when importing the file, minimum1 maximum 100.

Up axis—Used to select the 'up' axis.

- **Y**—Uses the Y axis as the 'up' axis.
- **Z**—Uses the Z axis as the 'up' axis.

Copyright © Right Hemisphere 2007. All Rights Reserved.

Nendo Files (.ndo)

You can view Nendo (.ndo) files.

The .ndo file format is the format for the 3D low-polygon modeler file associated with Nendo.

For further information on using files, please see Opening Files (on page 39), Importing Files (on page 40), and Saving Files (on page 55).

Object File Format Vector Graphics (.off)

You can view Object File Format Vector Graphic (.off) files.

For further information on using files, please see Opening Files (on page 39), Importing Files (on page 40), and Saving Files (on page 55).

Object File Format Vector Graphics Export (.off)

You can save files to the Object File Format Vector Graphics (.off) format.

For further information on using files, please see Opening Files (on page 39), Importing Files (on page 40), and Saving Files (on page 55).

Copyright © Right Hemisphere 2007. All Rights Reserved.

Open Inventor File Export (.iv)

You can save files to the Open Inventor (.iv) format.

For further information on using files, please see Opening Files (on page 39), Importing Files (on page 40), and Saving Files (on page 55).

Interface

Add indents—Indents the code within the saved file. This improves file readability.

Lights—Saves all light sources in the file.

Cameras—Saves all cameras in the file.

Default camera—Saves the default camera in the file.

Normals—Saves all normals that are assigned to face vertices.

Texture coordinates—Saves all UV texture coordinates that are assigned to face vertices.

Polylines—Saves all vectors or polylines.

Export materials—Saves all materials that are used by mesh objects.

Open Inventor File Import (.iv)

You can import and view Open Inventor (.iv) files.

For further information on using files, please see Opening Files (on page 39), Importing Files (on page 40), and Saving Files (on page 55).

Support

- ASCII only, partially supported.

Interface

Flip coordinate system—Flips the Y and Z axes.

Collapse hierarchy—Merges the selected objects to collapse the hierarchy.

Optimize hierarchy—Reduces the number of coordinates in the array of per vertex normals.

Optimize geometry—Reduces the number of coordinates in the array of per vertex normals.

Generate UV for all objects—Creates UV mapping for objects that do not currently have mapping. This enables you to apply texture maps to the object.

Text quality—Determines the quality of the text if any is contained within the scene. The text is converted to polygon face entities. If a high value is specified, more points and lines are used and the vertex count increases.

Text extrude—Establishes the depth of the characters (extrusion) in the text. For example, a value of 0 results in the text being flat, and a value of 100 results in the text being the maximum thickness possible.

Copyright © Right Hemisphere 2007. All Rights Reserved.

OpenFlight Scene Description Database (.flt)

You can view OpenFlight Scene Description Database (.flt) files.

OpenFlight is an industry standard real-time 3D scene description format (.flt) developed, owned and maintained by MultiGen Inc. It was originally developed by MultiGen in response to a need for database transportability within the visual simulation community.

OpenFlight is the most widely used file format for visual simulation databases and is supported by dozens of vendors of real-time 3D tools. Military visual simulation includes: battle simulation, jet fighter flight simulation, tank simulation. Visual simulation also includes geo-specific terrain for accurate real-time fly-through of regions of the planet.

For further information on using files, please see Opening Files (on page 39), Importing Files (on page 40), and Saving Files (on page 55).

Copyright © Right Hemisphere 2007. All Rights Reserved.

OpenFlight Scene Description Database Export (.flt)

You can save files to the OpenFlight Scene Description Database (.flt) format.

OpenFlight is an industry standard real-time 3D scene description format (.flt) developed, owned and maintained by MultiGen Inc. It was originally developed by MultiGen in response to a need for database transportability within the visual simulation community.

OpenFlight is the most widely used file format for visual simulation databases and is supported by dozens of vendors of real-time 3D tools. Military visual simulation includes: battle simulation, jet fighter flight simulation, tank simulation. Visual simulation also includes geo-specific terrain for accurate real-time fly-through of regions of the planet.

For further information on using files, please see Opening Files (on page 39), Importing Files (on page 40), and Saving Files (on page 55).

Limitations

- All geometry is imported, treating these unsupported nodes as simple group nodes. For example, Switch and LOF.
- All polygon sub-faces are grouped into special objects. These objects are rendered with a shift on the Z-axis. The amount of shift depends on the level of hierarchy. You can see this shift value in the Object Properties dialog.
- Currently, any specific texture data, like clamping, texture type (modulation, blend, decal, etc.) is ignored.
- Currently, only whole database referencing is supported.
- LOD nodes convert to application objects/groups. All LOD objects and their sub-objects with a switch-out distance of more than 0.0 are automatically hidden. So you can browse this file type with the highest resolution.
- The morph vertex node is interpreted simply as a vertex node. The first vertex from any pair is used.
- Unsupported nodes: Continuously Adaptive Terrain (CAT), Light Point, Binary Separating Planes, Sound, Road Segment/Path/Zone, Clip, and Text nodes.

Interface

Export vertices in local object space—Saves the vertices as they appear in local object space. Otherwise, they are saved as absolute vertex coordinates.

Export UVs—Exports all the UV coordinates.

Per vertex normals—Saves the array of per vertex normals in the file.

Per vertex colors—Saves the array of per vertex color in the file.

Use instances and references—Saves all instances and references in the file. This produces a smaller file size if the scene contains multiple copies of the same object. This option is only available when 'Export points in local object space' is selected.

Export color palette—Saves the color palette in the file.

Copyright © Right Hemisphere 2007. All Rights Reserved.

OpenGL CPP Code Export (.cpp)

You can save files to the OpenGL CPP Code file (.cpp) format.

These files are saved as series' of arrays with vertex positions, normals, texture coordinates and polygons included in the arrays. In addition, surface definitions (materials) associated with each polygon can be used to set up the OpenGL shading parameters.

For further information on using files, please see Opening Files (on page 39), Importing Files (on page 40), and Saving Files (on page 55).

Support

- Textures.

Interface

CPP code—Used to establish the type of CPP code that is generated and saved in the file.

- **Sample application**—Saves a .cpp file. This file contains the required information to compile and execute the resulting executable file. The executable file results in the 3D model rotating in the OpenGL Window.
- **Data only**—Saves all the arrays in the file.
- **Display list**—Saves all the arrays, code for generating the display list, and texture-loading code in the file.

Generate test application—Creates a sample application which includes a .cpp file. This file contains the required arrays and code for generating the display list and textures. This is useful for testing as you can build and run this without the need to make any coding changes. This option is only available when 'Display list' is selected as an export type.

Generate workspace and project files—Creates project .dsp and workspace .dsw files. This option is only available when 'Sample application' or 'Generate display list test application' is selected.

Items to Save—Used to establish which items in the scene to export.

- **Normals**—Saves the normals to the file. The vertex normals are converted to an array of normals. The array comprises all the normals used in the scene. They are in one coordinate system, unified, and are calculated using the application's current setting for smooth angle.
- **Texture coordinates**—Saves the texture coordinates to the file. The texture mapping coordinates (u/v coordinates) are converted to an array of textures. This array contains all the texture coordinates used in the scene. The texture coordinates are transformed with help of the material mapping parameters, U/V scale and U/V offset.
- **Texture maps**—Saves the texture maps, used by saved scene, as .bmp files in the same directory. The texture file name and OpenGL identifier are written to the .cpp file. The sample_TEXTURE texture_maps structure is used for storing information about texture maps. All texture maps are combined into a single array called texture_maps.
- **White materials**—Makes all materials without any textures completely white.
- **Material**—Includes materials from the saved scene into the CPP code. Each material is described by the MATERIAL structure and combined into a single array.

Note: Further information about materials is included in the OpenGL documentation.

- **Compact vertices/normals/textures data**—Removes any duplicated vertex coordinates, texture mapping coordinates, and normals from the file.
- **Optimize index types**—Writes all faces as triangles in a single array called face_indices. The types of items in the array include BYTE, SHORT, and GLint. The type used depends on the maximum index value. If a type is not selected, then by default the item is GLint.

Copyright © Right Hemisphere 2007. All Rights Reserved.

Show hidden geometry—Saves hidden objects to file and adds the following code to the InitializeRC() function. This option is not available when 'Data only' is selected.

```
glDisable (GL_CULL_FACE);
glLightModeli(GL_LIGHT_MODEL_TWO_SIDE ,1);
```

Rescale—Used to establish the scale factor and pivot point of the model in the file.

- **No rescale**—Saves the model as the actual scene size. That is, it does not rescale the scene.
- **Standard**—Scales the model using a standard scale to best fit in the viewport. That is, the scale factor is 1.0 and the pivot point coordinates are 0, 0, 0.
- **Custom**—Scales the model using a non-standard scale to best fit in the viewport. Used to determine the custom scale factor and the coordinates of the pivot point.
  - **Maximum size**—Sets the scale factor.
  - **Pivot point**—Used to position pivot point using X, Y, and Z coordinates.

Copyright © Right Hemisphere 2007. All Rights Reserved.

Points File (.pts)

You can view Point (.pts) files.

Note: Point cloud data usually created by 3D scanners.

The file structure is designed to store the points situated in 3D (and also 2D) space.

For further information on using files, please see Opening Files (on page 39), Importing Files (on page 40), and Saving Files (on page 55).

Polygon File Format (.ply)

You can view Polygon File Format (.ply) files.

For further information on using files, please see Opening Files (on page 39), Importing Files (on page 40), and Saving Files (on page 55).

Portable Graymap Graphics File Import (.pgm)

You can import and view Portable Graymap Graphics (.pgm) 16-bit files. You can specify scale factors for each axis when importing these files.

The .pgm file format (PGM) is very basic and serves as the lowest common denominator for converting and exchanging graphics files between different platforms. PGM is a simple 16-bit grayscale image files and may be stored in either binary or ASCII format. It is related to the PBM (black and white) and PPM (pixelmap) graphics file formats.

While PGM is actually a 2D image format, Deep Exploration considers it a 3D scene; when a file of this nature is opened, a 3D plane is constructed and the application then uses the image as a height-map to distort the plane.

For further information on using files, please see Opening Files (on page 39), Importing Files (on page 40), and Saving Files (on page 55).

Interface

Scale X factor—Determines the size of the model along the X axis.

Scale Y factor—Determines the size of the model along the Y axis.

Scale Z factor—Determines the size of the model along the Z axis.

Copyright © Right Hemisphere 2007. All Rights Reserved.

POV-Ray RAW Triangle (.raw)

You can view the POV-Ray RAW Triangle (.raw) files.

For further information on using files, please see Opening Files (on page 39), Importing Files (on page 40), and Saving Files (on page 55).

POV-Ray RAW Triangle Export (.raw)

You can save the POV-Ray RAW Triangle (.raw) files.

The .raw format is a simple ASCII file that stores a list of triangles without any further topological information. This format is easy to produce so it is widely used in the computer graphics community.

- RAW Triangle files contain one triangle per row.
- Each row contains nine floating point numbers that represent the coordinates of the three triangle vertices.
- If in the text there is a non-blank line, which does not contain nine floating point numbers, it is perceived as the name of the object.
- A RAW Triangle file must have the file extension .raw for Deep Exploration to process it properly.
- All points within an object that have identical X, Y, and Z coordinates (coincident vertices) are joined.

For further information on using files, please see Opening Files (on page 39), Importing Files (on page 40), and Saving Files (on page 55).

Example

A simple example of a RAW Triangle file:

```
10.0 0.0 0.0 10.0 10.0 0.0 10.0 10.0 10.0
10.0 0.0 0.0 10.0 10.0 0.0 10.0 10.0 -10.0
0.0 10.0 0.0 0.0 10.0 10.0 20.0 0.0 10.0
```

Power Render Object (.pro)

You can view Power Render Object (.pro) files.

A .pro file is a binary description of a 3D object or scene. It includes information about the 3D mesh, textures, materials, cameras, and animation used to display a scene. The .pro format is chunk-based.

For further information on using files, please see Opening Files (on page 39), Importing Files (on page 40), and Saving Files (on page 55).

Limitations

- Animation.
- Cameras are not retrieved.

Copyright © Right Hemisphere 2007. All Rights Reserved.

Protein Data Bank Import (.pdb)

You can import and view Protein Data Bank (.pdb) files.

The .pdb file format describes the positions of atoms in a molecular structure. Protein files are used to convey a number of different views of atoms, molecules, and compounds. They can range from simple single atoms through to complex compounds. You can set visual complexity and quality aspects using the file's import options (on page 40).

For example, the following images show the carbon dioxide molecule and the insulin compound. The atoms are displayed as 'spacefill' and colored by 'chain'.

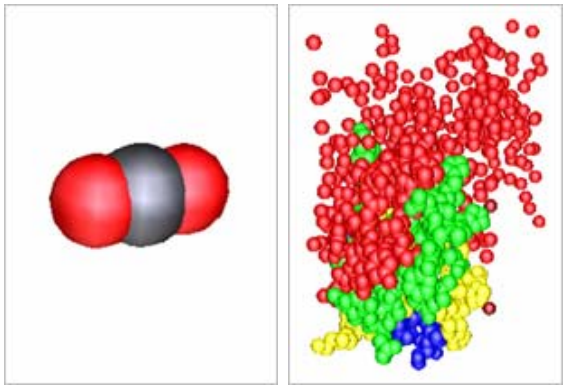

Carbon dioxide molecule / Insulin compound

Protein files function in the following manner:

- You can view molecular structures in a number of different ways including as wires and as backbones. This is helpful when viewing the structure of the compounds. For example, the following images show the nitroglycerine compound with the atoms displayed firstly as 'wire by residue' and then as 'balls and sticks by atom'.

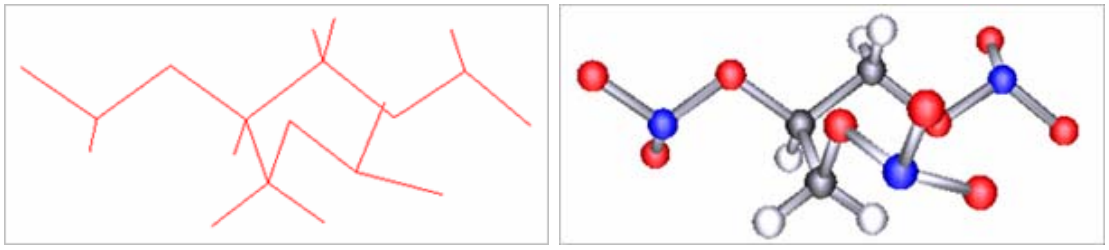

Nitroglycerine compound: Wire by residue / Balls and sticks by atom

- Components of the molecular structures can be displayed by color and their related materials appear uniquely in the Materials list. This enables you to identify components easily. For example, you could change the color of all oxygen molecules in a file.
- Compound objects are ordered in a hierarchical manner based on the compound's hierarchy. For example, chains, seqres, and residues. This helps with component selection.

Copyright © Right Hemisphere 2007. All Rights Reserved.

- You can display multiples views simultaneously by merging the same file or different files (on page 53) into the current scene. For example, the following image shows the insulin compound with each chain displayed in a different view, and with water and zinc molecules deleted.

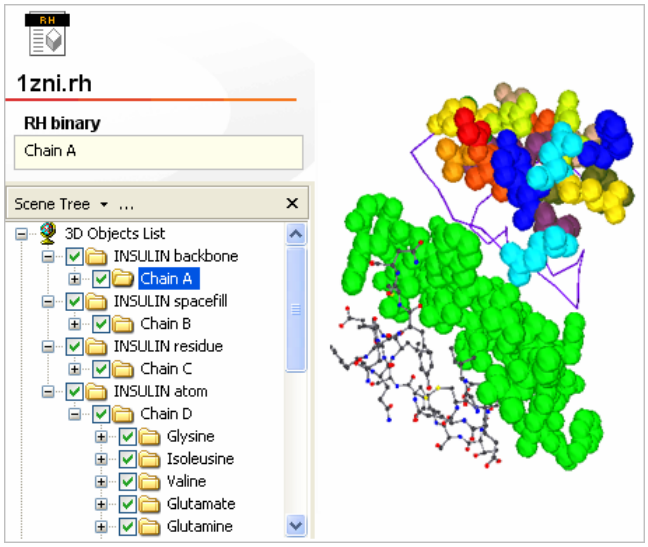

For further information on using files, please see Opening Files (on page 39), Importing Files (on page 40), and Saving Files (on page 55).

Interface

Sphere segments—The number of pieces into which spheres are divided.

Stick segments—The number of pieces into which sticks are divided.

View—Used to view the structure of the compound's components.

- **Wire—**Displays components as single connecting lines.
- **Balls and sticks—**Displays components as spheres and cylinders.
- **Spacefill—**Displays components as spheres representing the Van der Waals radii (http://en.wikipedia.org/wiki/Van_der_Waals_radius) of the atoms; the radii of imaginary hard spheres that are used to model atoms.
- **Backbones—**Displays components as paths of carbon chains in long chain molecules.

Note: Most simple molecules do not have backbones or residues. As such, there may be nothing visible if you select these options. Also, you cannot use the 'By atoms' color option when viewing compounds as backbones. The default setting should be to display as either wire, or as balls and sticks with spheres set to 10 and sticks set to 4, and then color by atom.

Color—Used to identify the various compound components.

- **Monochrome—**Displays a grayscale view of the components.
- **By atom—**Displays a color view of the atoms. Note that this option is not available when viewing compounds as backbones.
- **By residue—**Displays a color view of the compound's residue.

Note: Most simple molecules do not have residues or backbones. As such, there may be nothing visible if you select these options. The default setting should be to display as either wire, or as balls and sticks with spheres set to 10 and sticks set to 4, and then color by atom.

- **By chain—**Displays a color view of the compound's chain.
- **Rainbow—**Displays the components in multiple colors. This is helpful for viewing complex compounds.

Copyright © Right Hemisphere 2007. All Rights Reserved.

Quake Character Model I (.mdl)

You can view Quake Character Models I (.mdl) files.

The .mdl file format was developed by Quake for character modelling.

For further information on using files, please see Opening Files (on page 39), Importing Files (on page 40), and Saving Files (on page 55).

Support

- Texture coordinates.
- The first skin is used as the texture.

Limitations

- Only the first frame is used.
- The normals of vertices are ignored.

Quake Character Model II (.md2)

You can view Quake Character Models II (.md2) files.

The .md2 file format is a custom format used only by Quake2 and Quake2 mission packs. MD2 files can be generated from various other file formats in their original and modified forms. A single .md2 file contains the model's geometry, frame information, skin file name and texture coordinates.

These files basically consists of a big list of triangles which then 'form' the animation. This format .md2 format has some restrictions. It is not skeleton-based, which means it is very difficult to turn parts of the model. For example, to move a head independently from the rest of the body. However, .md2 files are very easy to use and import; it can be used by almost every game without great problems.

For further information on using files, please see Opening Files (on page 39), Importing Files (on page 40), and Saving Files (on page 55).

Support

- Animation.
- Only the first frame is used.
- Only the first skin is used.
- Texture coordinates.

Limitations

- All GL commands are ignored.
- The LightNormalIndex of vertices is ignored.

Copyright © Right Hemisphere 2007. All Rights Reserved.

Quake Character Model III (.md3)

You can view Quake Character Models III (.md3) files.

The .md3 file format uses vertex animation (also called morph target animation) and not skeletal animation. So will not find skeletons in these files. An .md3 model is normally made of three body parts and the weapon model.

For further information on using files, please see Opening Files (on page 39), Importing Files (on page 40), and Saving Files (on page 55).

Limitations

- Bones.
- Transparency in textures is supported only for 32-bit TGA files.

Quake Map File (.map)

You can view Quake Map (.map) files.

For further information on using files, please see Opening Files (on page 39), Importing Files (on page 40), and Saving Files (on page 55).

Limitations

- Textures.

Quicktime 3D Metafile (.3dm, .3dmf)

You can view Quicktime 3D Metafile (.3dm and .3dmf) files. Only mesh geometry and material attributes are properly extracted from the file.

The .3dmf format (3D Metafile format) is the native file format for the Quicktime and QuickDraw 3D applications developed by Apple. The .3dmf format is a scene-description language for storing 3D data used in computer aided design. These files are often quite small because they store the geometry of the model instead of a picture.

For further information on using files, please see Opening Files (on page 39), Importing Files (on page 40), and Saving Files (on page 55).

Supported

- Binary files only, partially supported.

Copyright © Right Hemisphere 2007. All Rights Reserved.

RAX Extended RAW Triangles (.rax)

You can view RAX Extended RAW Triangle (.rax) files. This format lets you add texturing to your RAW models.

Each row of the extended RAW format contains 15 floating point numbers. The first nine of them represent the coordinates of the three triangle vertices (as in the simple RAW format). The second six numbers are texture coordinates for each triangle vertex. The last number (optional) is the texture index which is used for objects that require more than one texture. It is zero by default.

You can also define default texture maps for optional textures used in objects. It can be done by adding: Texture=TextureFileName.

For further information on using files, please see Opening Files (on page 39), Importing Files (on page 40), and Saving Files (on page 55).

Example

Here is an example of the Extended RAW format (Object MyRAWObject#1, uses two textures):

```
Texture0=c:\graph\tex1.jpg
Texture1=c:\graph\tex2.jpg

MyRAWObject#1
10.0 0.0 0.0 10.0 10.0 0.0 10.0 10.0 10.0 0.753 0.157 0.753 0.157 0.753
0.157 1
10.0 0.0 0.0 10.0 10.0 0.0 10.0 10.0 -10.0 0.753 0.169 0.263 0.220 0.722
0.220 1
0.0 10.0 0.0 0.0 10.0 10.0 20.0 0.0 10.0 0.251 0.514 0.412 0.431 0.169
0.525 0
```

Copyright © Right Hemisphere 2007. All Rights Reserved.

Rhinoceros 3D Model Export (.3dm)

You can save files to the Rhinoceros 3D Model file (.3dm) format.

For further information on using files, please see Opening Files (on page 39), Importing Files (on page 40), and Saving Files (on page 55).

Support

- Curves and meshes.
- Points and point clouds (cluster of points).
- Light sources and cameras.
- Surfaces and BREPS.

Interface

Skip hidden objects—Does not export objects that are hidden.

Put all curves in single layer—Groups all curves together in one layer.

Export light sources—Exports all the light sources.

Export cameras—Exports the Rhino cameras.

Copyright © Right Hemisphere 2007. All Rights Reserved.

Rhinoceros 3D Model Import (.3dm)

You can import and view Rhinoceros 3D Model (.3dm) files.

The .3dm file format is the native file format of the Rhino3D modeling application developed by Rhinoceros. Rhino3D can create, edit, analyze, and translate NURBS curves, surfaces, and solids in Windows. There are no limits on complexity, degree, or size. Rhino also supports polygon meshes and point clouds.

For further information on using files, please see Opening Files (on page 39), Importing Files (on page 40), and Saving Files (on page 55).

Support

- All NURBS and mesh objects.
- Curves and meshes.
- Light sources and cameras.
- Materials are is converted into Deep Exploration's materials. Note that wire objects (points, points clouds, and curves) only have color and no materials. Therefore, the color is taken from the object or layer, then converted to a material.
- Object names and visibility.
- Points and point clouds (cluster of points).
- Surfaces and BREPS.

Limitations

- BREPs with only one face and one trivial trimming loop are imported as a surface with minor optimization.
- Polycurves are imported as one curve is they only have one segment.
- Viewports converted to cameras.

Interface

Skip objects in hidden layers—Only imports visible objects on visible layers. That is, visible objects on invisible layers are not imported.

Skip hidden objects—Only imports visible objects on visible layers. That is, invisible objects on visible layers are not imported.

Place all curves in single group—Groups all curves into one group. This object is labelled 'All curve groups'. This option takes priority over the 'Group objects by Rhino layers' option if both options are selected.

Group objects by Rhino layers—Groups all layer information into one group. The 'Place all curves in single group' option takes priority over this option if both options are selected.

Double-sided surfaces—Imports surfaces as double-sided.

Split BREP faces into separate objects—Expands the BREP object groups. That is, expands the object hierarchy tree to display BREP objects, parts, and sub-parts.

Note: BREPs with only one face are imported as one node and not two, if the 'Split BREP faces into separate objects' option is selected.

Import lights—Imports all Rhino lights.

Import cameras—Imports all Rhino cameras and uses them to view the model.

Copyright © Right Hemisphere 2007. All Rights Reserved.

Right Hemisphere Binary (.rh)

You can view Right Hemisphere Binary (.rh) files.

The .rh file format was developed by Right Hemisphere. (http://www.righthemisphere.com)

For further information on using files, please see Opening Files (on page 39), Importing Files (on page 40), and Saving Files (on page 55).

Support

- Cameras.

Right Hemisphere Binary Export (.rh)

You can save files to the Right Hemisphere Binary file (.rh) format.

The .rh file format was developed by Right Hemisphere. (http://www.righthemisphere.com) Using it you can save keyframe animation information, normals, and skins. You can also choose to compress the exported file, or compress points within the file, apply protection, save the file for different application versions, and create thumbnails of varying sizes.

'Lossy' (loss of data) compression can be used to compress .rh files; lossy compression treats two vertices that are sufficiently close to each other as one, resulting in a change to the file size and model quality.

For further information on using files, please see Opening Files (on page 39), Importing Files (on page 40), and Saving Files (on page 55).

Support

- Cameras.

Interface

Compression—Reduces the model's file size while maintaining the quality. Compression helps to reduce the amount of storage and transmission bandwidth required for 3D models.

RH4 compression—Used to establish the compression settings when saving to the DE 4.0 version of the .rh file.

- **Dictionary size**—Determines the size of the dictionary size to use for compression. The larger the size of the dictionary, the better the compression.
- **Compression mode**—Determines the type of the compression with which to export the file. The faster the compression, the faster the file is saved but the larger the resulting file.
  - **Very Fast**—Compresses the file using a low level of compression. This creates the largest file. However, the compression speed is very fast.
  - **Fast**—Compresses the file using a medium level of compression.
  - **Normal**—Compresses the file using a high level of compression.
  - **Best**—Compresses the file using the maximum level of compression. This creates a very small file. However, the compression speed is very slow.

Export animation—Saves the keyframe animation in the file.

Export skin—Saves the model's skin in the file. Note that if a model contains skin animation and this option is not checked, the animation is lost.

Copyright © Right Hemisphere 2007. All Rights Reserved.

Vertices quality—Used to establish the percentage of the data about the file's vertices to keep. Lossy compression is used here. Once you have compressed the vertices data, this information is lost. That is, you cannot reverse this compression. Note that this option is only available when you save using the file version DE 4.0.

- **[percentage]**—Used to select the percentage of data to keep.

UV points quality—Used to establish the percentage of the data about the file's UV points to keep. Lossy compression is used here. Once you have compressed the UV point data, this information is lost. That is, you cannot reverse this compression. Note that this option is only available when you save using the file version DE 4.0.

- **Off**—Does not compress the file's UV points.
- **[percentage]**—Used to select the percentage of data to keep.

Normals quality—Used to establish the percentage of the data about the file's normals to keep. Lossy compression is used here. Once you have compressed the normals data, this information is lost. That is, you cannot reverse this compression. Note that this option is only available when you save using the file version DE 4.0.

- **Off**—Does not compress the file's normals.
- **[percentage]**—Used to select the percentage of data to keep.

File protection—Protects the exported file. Once the file is protected, you cannot save the file to any format other than the .rh format. This is helpful if you want to distribute a proprietary model to people who need to see the file, but should not edit or copy it. For example, if a company's Web site features an online parts catalog which displays their parts, and the company does not want their competitors obtaining useable copies of these parts.

Note: The file's name, path, and protection status is displayed in the application's title bar.

Export viewports (on page 63)—Saves the current viewport layout in the file.

Version—Used to establish in which version to save the file.

- **DE 3.5**—Saves the model as a Deep Exploration version 3.5 file.
- **DE 4.0**—Saves the model as a Deep Exploration version 4.0 file.

Thumbnail—Creates the specified size thumbnail image of the current model. The thumbnail image displays any setting that have been applied to the model. The thumbnail is displayed in Microsoft's Windows Explorer program (with Thumbnail view turned on). Alternately you can select to not create a thumbnail image.

- **No thumbnail**—Does not create a thumbnail.
- **[size]**—Creates a thumbnail of the specified width and height, in pixels.

Copyright © Right Hemisphere 2007. All Rights Reserved.

Shockwave 3D File Export (.w3d)

You can save files to the Shockwave 3D File (.w3d) format.

The .w3d file format can be published to the Shockwave .html format (on page 526) for Internet use.

For further information on using files, please see Opening Files (on page 39), Importing Files (on page 40), and Saving Files (on page 55).

Interface

Compression—Reduces the model's file size to the specified level of quality. Compression helps to reduce the amount of storage and transmission bandwidth required for 3D models.

- **Geometry quality**—Compresses the geometry to the specified percentage of quality.
- **Animation quality**—Compresses the animation to the specified percentage of quality.
- **Texture quality**—Compresses the texture maps to the specified percentage of quality.

Texture Maps—Used to establish whether to export texture maps and the size of the texture maps.

- **Export textures**—Exports the texture maps. Otherwise, the texture maps are not exported.
  - **No limit to textures size**—Does not scale the texture map. The texture map is saved as its current size.
  - **512x512**—Scales the texture map to a maximum size of 512x512 pixels.
  - **256x256**—Scales the texture map to a maximum size of 256x256 pixels.
  - **128x128**—Scales the texture map to a maximum size of 128x128 pixels.

Additional—Used to establish miscellaneous settings.

- **Export animation**—Exports the animation.
- **Progress bar**—Displays the Exporting Model and the Compiling ShockWave 3D Mesh progress bars in the 'Save 3D File' dialog as the .w3d file is being saved.
- **Report W3D file contents**—Displays information about the .w3d file in the Shockwave 3D File Analysis dialog. This information includes the proportion of the file that each item uses, the file size in KB, the Initial Load Segment (ILS) size, and the amount of RAM required by the textures.
- **Preview exported scene**—Displays a 3D Flash preview of the file. The preview only displays geometry, mats, and textures. It does not display animation.

Copyright © Right Hemisphere 2007. All Rights Reserved.

Shockwave Web Page Export (.html)

You can save files to the Shockwave Web Page file (.html) format.

The Shockwave .html format is the Internet supported version of the Shockwave .w3d file format (on page 525).

For further information on using files, please see Opening Files (on page 39), Importing Files (on page 40), and Saving Files (on page 55).

Interface

Compression—Reduces the model's file size to the specified level of quality. Compression helps to reduce the amount of storage and transmission bandwidth required for 3D models.

- **Geometry quality**—Compresses the geometry to the specified percentage of quality.
- **Animation quality**—Compresses the animation to the specified percentage of quality.
- **Texture quality**—Compresses the texture maps to the specified percentage of quality.

Texture Maps—Used to establish whether to export texture maps and the size of the texture maps.

- **Export textures**—Exports the texture maps. Otherwise, the texture maps are not exported.
  - **No limit to textures size**—Does not scale the texture map. The texture map is saved as its current size.
  - **512x512**—Included the texture maps scaled to a maximum size of 512x512 pixels.
  - **256x256**—Included the texture maps scaled to a maximum size of 256x256 pixels.
  - **128x128**—Included the texture maps scaled to a maximum size of 128x128 pixels.

Additional—Used to establish miscellaneous settings.

- **Export animation**—Exports the animation.
- **Progress bar**—Displays the Exporting Model and the Compiling ShockWave 3D Mesh progress bars in the 'Save 3D File' dialog as the .w3d file is being saved.
- **Report W3D file contents**—Displays information about the .w3d file in the Shockwave 3D File Analysis dialog. This information includes the proportion of the file that each item uses, the file size in KB, the Initial Load Segment (ILS) size, and the amount of RAM required by the textures.
- **Preview exported scene**—Displays a 3D Flash preview of the file. The preview only displays geometry, mats, and textures. It does not display animation.

Copyright © Right Hemisphere 2007. All Rights Reserved.

Silo3D Import (.sia)

You can import and view Silo3D (.sia) files.

For further information on using files, please see Opening Files (on page 39), Importing Files (on page 40), and Saving Files (on page 55).

Support

- Meshes (with subdivision).
- Material and object names.
- UV coordinates.
- Textures.

Silo3D Export (.sia)

You can save files to the Silo3D file (.sia) format.

For further information on using files, please see Opening Files (on page 39), Importing Files (on page 40), and Saving Files (on page 55).

Support

- Meshes (with subdivision).
- Material and object names.
- UV coordinates.
- Textures.

Copyright © Right Hemisphere 2007. All Rights Reserved.

SOFTIMAGE|XSI (.xsi)

You can view SOFTIMAGE|XSI (.xsi) files.

The .xsi file format is an ASCII file format defined by Softimage Co. to store SOFTIMAGE 3D and SOFTIMAGE XSI scene data.

For further information on using files, please see Opening Files (on page 39), Importing Files (on page 40), and Saving Files (on page 55).

Support

- Animation.

SOFTIMAGE|XSI Export (.xsi)

You can save files to the SOFTIMAGE|XSI file (.xsi) format.

The .xsi file format is an ASCII file format defined by Softimage Co. to store SOFTIMAGE 3D and SOFTIMAGE XSI scene data. The file format allows the import and export of characters, models, and animation for complete customization of any game-development pipeline. The file format lets you include user data, making it straightforward to introduce new types of custom information.

For further information on using files, please see Opening Files (on page 39), Importing Files (on page 40), and Saving Files (on page 55).

Support

- Animation.

Interface

General—Used to establish general export settings.

- **Version**—Used to establish in which version of the format to save the file.
  - **XSI 3.5 realtime materials**—Saves the model as a SOFTIMAGE|XSI version 3.5 file with realtime materials. Realtime materials are technically equivalent to realtime shaders.
  - **XSI 3.5 Softimage materials**—Saves the model as a SOFTIMAGE|XSI version 3.5 file with Softimage materials.
  - **XSI 3.0**—Saves the model as a SOFTIMAGE|XSI version 3.0 file.
- **Export materials**—Saves the mesh object materials in the file.
- **Export normals**—Saves any face vertex normals in the file.
- **Export textures**—Saves any face vertex UV information in the file.
- **Add top level frame**—Adds a single frame to the file if more than one object does not have a parent object. This option is is only available when 'Change axes (swap y and z)' is not selected.
- **Invert normals**—Inverts the direction of each vertex normal to point in the opposite direction.
- **Add indents**—Indents the code in the file. This is used to improve file readability.
- **Export per vertex color**—Exports the 'Array of per vertex color' geometry item.
- **Swap Y and Z axes**—Switches the Y axis with the Z axis.

Copyright © Right Hemisphere 2007. All Rights Reserved.

- **Create dummy objects**—Duplicates the objects in the Scene tree to create dummy objects. The dummy objects are not displayed in the viewport and do not have any physical properties. They have the following properties: position, rotation, scale, shear, and transformation matrix.
- **XSI 2.0 compatibility**—Saves the model with backward compatibility to version 2.0 of the .xsi file format.

Animation—Used to establish the animation export settings.

- **Export animation**—Saves the animation to the file.
- **Rescale animation**—Used to change the length of the animation.
- **Rescale type**—Used to select how to rescale the animation.
  - **Length in (cs)**—Rescales the animation length by the specified length in centiseconds.
  - **By percent**—Rescales the animation length by the specified percentage. For example, a 50-second animation scaled by 150% would be 75 seconds long.
- **Centiseconds**—Determines the length of the animation in centiseconds.
- **Percent**—Determines the amount of scaling to apply to the animation if the 'Change animation to' option is selected.
- **Reverse animation sequence**—Reverses the animation sequence from moving forwards to backwards.
- **Remove redundant keys**—Removes duplicate animation keys from the exported file. The exported animation plays with the same or similar behaviour, but with fewer keys.
- **Sample animation**—Samples the animation sequence at the specified sampling rate.
- **Sample frames**—Determines the rate at which the animation is sampled.

Copyright © Right Hemisphere 2007. All Rights Reserved.

Stereolithography File (.stl)

You can view Stereolithography Rapid Prototyping Data (.stl) files.

The .stl file format is an intermediate data file that allows stereolithography devices to deal with solids made by triangles. It is typically generated as a by-product of geometry rich CAD data (for example, NURBS). While still a means to move around unstructured meshes made by triangles, this file format is growing in popularity due to its simplicity: .stl files are composed of a set of many unsorted triangular facets. An .stl file has two formats: ASCII and binary. When the binary format is used to describe an STL file, the data size is much smaller than the ASCII format. For this reason, most .stl files available now use the binary format.

For further information on using files, please see Opening Files (on page 39), Importing Files (on page 40), and Saving Files (on page 55).

Support

- ASCII and binary.

Example

The following example shows the ASCII format of an .stl file:

```
solid sample.stl
facet normal -1.000000 0.000000 0.000000
outer loop
vertex 140.502634 233.993075 -38.310362
vertex 140.502634 229.424780 -38.359042
vertex 140.502634 242.525774 -27.097848
endloop
endfacet
facet normal 0.903689 0.004563 0.428166
outerloop
vertex 134.521310 273.427873 30.342009
vertex 134.521310 308.505852 30.715799
vertex 140.502634 334.576026 18.369396
endloop
endfacet
facet normal -0.903689 0.004563 0.428166
outer loop
vertex 140.502634 334.576026 18.369396
vertex 140.502634 294.929752 17.946926
vertex 134.521310 273.427873 30.342009
endloop
endfacet
... ...
endsolid sample.stl
```

Copyright © Right Hemisphere 2007. All Rights Reserved.

Stereolithography Rapid Prototyping Data Export (.stl)

You can save files to the Stereolithography Rapid Prototyping Data Export (.stl) format.

The .stl file format is an intermediate data file that allows stereolithography devices to deal with solids made by triangles. It is typically generated as a byproduct of geometry rich CAD data. For example, NURBS. While still a means to move around unstructured meshes made by triangles, this file format is growing in popularity due to its simplicity: .stl files are composed of a set of many unsorted triangular facets. An .stl file has two formats: ASCII and binary. When the binary format is used to describe an STL file, the data size is much smaller than the ASCII format. For this reason, most .stl files available now use the binary format.

The STL export plugin writes out the scene to an ASCII-formatted or binary-formatted StereoLithography .stl file.

For further information on using files, please see Opening Files (on page 39), Importing Files (on page 40), and Saving Files (on page 55).

Support

- ASCII and binary versions.

Interface

ASCII mode—Saves the file in ASCII format. Otherwise, the .stl files is saved as a binary file.

Copyright © Right Hemisphere 2007. All Rights Reserved.

Universal 3D Export (.u3d)

3dif.x3d plugin updated. Using U3D 1.2 libraries by default, removed specular level params export from code and from UI.

You can save files to the Universal 3D (.u3d) format.

The .u3d format, adopted by Adobe, is required and used as the 3D publishing format in Adobe Acrobat. U3D files can be inserted into PDF documents to view the 3D content in Adobe Acrobat or Adobe Reader.

For further information about the .u3d file format, please see www.3dif.org (http://www.3dif.org). For further information on using files, please see Opening Files (on page 39), Importing Files (on page 40), and Saving Files (on page 55).

Support

- Textures.
- Cameras.

Limitations

- The .u3d format does not support pivot points so pivot point locations may be incorrect. To correct this, create a group node at the location of the original object's pivot point. The original object appears as a child of this node. To rotate the object about its original pivot point, select the new parent node and rotate it.

Interface

General—Used to establish the general settings.

U3D File Format

- **ECMA 1st edition**: Select 1st edition for more compatibility (all U3D readers support it).
- **ECMA 3rd edition:** 3rd edition may be unsupported by some applications (like Acrobat 7). 3rd edition also have some improvements, so if your application supports 3rd edition, you should use it.

Mesh Compression

- **Uncompressed**-No compression selected.
- **Compressed**-Compresses the file using one the following options.
- **Compression Quality (0-1000)**-Lets you define what quality of compression you want, 1000 - gives best quality, 0 - worst quality.
  - **Game**-Predefined quality for games applications.
  - **CAD**-Predefined quality for CAD applications.

Texture Compression

- **JPEG**—Exports all textures in the JPEG file format.
  - **Quality**—Compresses the JPEG files to the specified percentage quality.

Note: If the JPEG option is not selected then the default texture format, PNG, will be used.

- **Normals**—Exports all surface normals. Using this option creates more appealing looking models but larger files.
- **Default camera** (on page 61)—Saves the default camera view in the file. For example, if you open a scene, rotate it, and export it to the .u3d format with this option selected, that view is used when you open the .u3d file.

Copyright © Right Hemisphere 2007. All Rights Reserved.

- **Append data to non-unique names**—Appends '##' followed by a number to all the non-unique object names in a scene. This creates a unique name for all the objects in a scene. This is very important as the u3d format requires a unique name for each scene object.
- **Skin and bones**—When enabled writes skin and bones information to U3D. Note that not all scenes with skin and bones can be exported to U3D due to limitations of U3D file format.

Note that all bones have to be children of the skinned mesh, Fix bone hierarchy may help to fix this. Also, all bones have to be "bones", not "groups" or "meshes". 3ds Max's Character Studio uses "meshes" as bones, so it is not supported by U3D export.

- **Fix bone hierarchy**—Turning this option ON may help when converting some scenes with skin and bones.
- **Metadata**—If 'Yes' is selected metadata is embedded in the .u3d file. Note that the metadata is stored internally, in XML format, which will increase the file size.

Copyright © Right Hemisphere 2007. All Rights Reserved.

Universal 3D Import (.u3d)

You can import and view Universal 3D (.u3d) files.

The .u3d format, adopted by Adobe, is required and used as the 3D publishing format in Adobe Acrobat. It can store meshes in two different ways: as a base mesh or as a progressive continuous level of detail (CLOD) mesh. Base meshes are not compressed, and do not include any level-of-detail. As such, these files are saved very quickly but are large in size. A progressive mesh is highly compressed and has a continuous level of detail. These files are smaller than base mesh files; however they take much longer to save.

A mesh can consist of multiple parts. For example, a mesh could comprise 80 vertices made up of 50 base vertices and 30 progressive vertices.

For further information about the .u3d file format, please see www.3dif.org (http://www.3dif.org). For further information on using files, please see Opening Files (on page 39), Importing Files (on page 40), and Saving Files (on page 55).

Support

- Cameras.

Interface

Common—Used to establish the common settings.

- **Import LOD** (on page 325)—Imports LOD with the current file. Otherwise, the highest level of detail is imported.
- **Parse metadata**—Reads all metadata information including markups and material specular level metadata.
- **Remove append data from names**—Removes the '##' and the number from the objects' names if the names contain these characters.
- **Level of Detail**—Used to establish the Level Of Detail (LOD) settings. U3D files store a continuous LOD; that is, every LOD is stored. LOD is a way of displaying models with different numbers of polygons depending on how close they are to the camera using the Level of Detail controls. This can speed up the rendering time by limiting the number of polygons that need to be drawn.
  - **Levels**—The number of LODs that you want to import. The higher the number, the more information is imported.
  - **Create LOD if mesh has minimum vertices**—Creates the LOD if a single mesh has more than this number of vertices. For example, if you enter 200 here, LODs are created if a mesh has at least 200 vertices. Otherwise, no LODs are created. This is helpful where models comprise very small meshes with a small number of vertices, as LODs created for models such as these would be too small to be visible.
  - **Create LOD if minimum vertices in file**—Creates the LOD if the total number of vertices in a file is more than the specified number of vertices.
  - **Minimum vertices per mesh**—For example, the total number of vertices is 50,000, and the number of mesh vertices is 50. A LOD is not created if you import a file with a total of 47,000 vertices and at least 60 vertices per mesh. However, a LOD is created if the file contains a total of 55,000 vertices and at least 55 vertices per mesh.

Note: The level of detail (LOD) is created for a mesh if one of these two cases is true:

1. The number of vertices in the mesh is greater than or equal to "Create LOD if mesh has minimum vertices".

2. The total number of vertices in the scene is greater than or equal to "Create LOD if minimum vertices in file" **AND** the current mesh has at least "Minimum vertices per mesh" vertices.

Copyright © Right Hemisphere 2007. All Rights Reserved.

VRML Worlds Export (.wrl, .vrml)

You can save to the VRML (Virtual Reality Modeling Language Worlds) (.wrl, .vrml) formats.

The .wrl file format is a file format that is widely used by the Internet community to represent and navigate 3D hyper-linked virtual worlds. VRML is mainly a graphics format that represents simple solid primitives (for example, spheres and cylinders), polygons, polylines, and their visual attributes.

The Virtual Reality Modeling Language (VRML) is a language for describing multi-participant interactive simulations-virtual worlds networked via the global Internet and hyper-linked with the World Wide Web. All aspects of virtual world display, interaction and internetworking can be specified using VRML. It is the intention of its designers that VRML become the standard language for interactive simulation within the World Wide Web.

For further information on using files, please see Opening Files (on page 39), Importing Files (on page 40), and Saving Files (on page 55).

Support

- Cameras.

Limitations

- Only a single value is supported for material ambient color. If the value specified in the 'Set ambient color to (on page 58)' field is not grey, the RGB values will be averaged before being exported.

Interface

Version—Saves the file to the selected VRML language version.

- **VRML 1.0**—Saves the file to version 1.0 of the VRML language.
- **VRML 2.0**—Saves the file to version 2.0 of the VRML language.

Add indents—Inserts indentations to the output file. This helps to keep the file readable.

Flip coordinate system—Rotates the model so it uses a left-hand coordinate system. That is, it flips the Y and Z axes.

Export lights—Saves all light sources in the output file.

Export cameras—Saves all cameras using the Viewpoint structure.

Export default camera—Saves the default camera.

Export normals—Saves all normals that are assigned to face vertices.

Export texture coordinates—Saves all UV texture coordinates that are assigned to face vertices.

Export polylines—Saves all vectors or polylines.

Export materials—Saves all materials that are used by mesh objects.

Max vertices in polygon—Exports polygons containing less than or equal to the specified number of vertices. This reduces the file size.

Copyright © Right Hemisphere 2007. All Rights Reserved.

VRML Worlds Import (.wrl, .vrml)

You can import and view VRML (Virtual Reality Modeling Language Worlds) Worlds (.wrl, .vrml) files.

The .wrl and .vrml file formats are file formats that are widely used by the Internet community to represent and navigate 3D hyper-linked virtual worlds. VRML is mainly a graphics format that represents simple solid primitives (for example, spheres and cylinders), polygons, polylines, and their visual attributes.

The VRML is a language for describing multi-participant interactive simulations - virtual worlds networked via the global Internet and hyper-linked with the World Wide Web. All aspects of virtual world display, interaction and internetworking can be specified using VRML. It is the intention of its designers that VRML become the standard language for interactive simulation within the World Wide Web.

For further information on using files, please see Opening Files (on page 39), Importing Files (on page 40), and Saving Files (on page 55).

Support

- Cameras.

VRML 1.0

- Fully supported.

Limitations

- Lights and fog data are ignored.
- Textures are not mapped to text objects.
- Transparency in textures is ignored.
- URL links are discarded.

VRML 2.0

- Animation data are ignored.
- In/Out Events are not supported.
- Nested PROTO nodes are not supported.
- ROUTE ignored.
- Scripts are not supported.
- Vertex colors and line colors, and cells in Elevation Grids, are not supported.

Interface

Flip coordinate system—Rotates the model so it uses a right-hand coordinate system. That is, it flips the Y and Z axes.

Collapse hierarchy—Merges the selected objects to collapse the hierarchy.

Optimize hierarchy—Removes redundant nodes fro the scene.

Optimize geometry—Reduces the number of coordinates in the array of per vertex normals.

Create UVs—Creates UV mapping for objects that do not currently have mapping. This enables you to apply texture maps to the object.

Copyright © Right Hemisphere 2007. All Rights Reserved.

Text quality—Determines the quality of the text. If a scene contains text, the text is converted to polygon face entities. If a high value is specified, more points and lines are used and the vertex count increases.

Text extrusion—Establishes the extrusion of the text. That is, the depth of the characters in the text. For example, a value of 0 results in the text being flat, and a value of 100 results in the text being the maximum thickness possible.

Copyright © Right Hemisphere 2007. All Rights Reserved.

Wavefront Object Export (.obj)

You can save files to the Wavefront Object (.obj) format.

The .obj file format was developed for the Wavefront application acquired by Alias. The format stores a description of the surface of a 3D object, composed of triangles or higher degree polygons.

For further information on using files, please see Opening Files (on page 39), Importing Files (on page 40), and Saving Files (on page 55).

Support

- Associated materials are exported as .mtl files (on page 557).
- Groups are read as separate objects.
- Polygonal objects and free-form objects. Polygonal geometry uses points, lines, and faces to define objects while free-form geometry uses curves and surfaces. Deep Exploration reads only polygonal geometry.
- Texture coordinates.

Example

The following is an example of an .obj file:

```
v 0.000000 2.000000 2.000000
v 0.000000 0.000000 2.000000
v 2.000000 0.000000 2.000000
v 2.000000 2.000000 2.000000
v 0.000000 2.000000 0.000000
v 0.000000 0.000000 0.000000
v 2.000000 0.000000 0.000000
v 2.000000 2.000000 0.000000
f 1 2 3 4
f 8 7 6 5
f 4 3 7 8
f 5 1 4 8
f 5 6 2 1
f 2 6 7 3
```

Interface

Common—Used to establish the common settings.

- **Compact data**—Optimizes all vertices, normals, and texture coordinates by and compresses the data by removing any duplicate items.
- **Create material file**—Saves all material information in the .mtl file.
- **Export vertex normals**—Saves the vertex normals in the .obj file.
- **Export texture coordinates**—Saves any (u,v) texture coordinates that are assigned to face vertices in the .obj file.
- **Triangulate non-flat polygons**
- **Flip coordinate system**—Rotates the model so it uses a left-hand coordinate system. That is, it flips the Y and Z axes.
- **Create SubD control mesh**—Creates low detail, low polygon count subdivision control mesh with models that contain subD's. This mesh is subdividable.
- **Max vertices in polygon**—Exports polygons containing less than or equal to the specified number of vertices. This reduces the file size.

Copyright © Right Hemisphere 2007. All Rights Reserved.

- **Replace material colors**—Replaces material colors (ambient, diffuse, and specular) with 'white' if the same texture is present and if the texture blending mode (on page 353) is set to 'Replace'. This ensures the saved file more closely resembles the source scene.

Number of digits after the decimal point—Used to manage double precision output.

- **Vertices (v)**—Used to optimize precision for geometric vertices.
- **Normals (vn)**—Used to optimize precision for vertex normals.
- **UVs (vt)**—Used to optimize precision for texture vertices.

Wavefront Object Import (.obj)

You can import and view Wavefront Object (.obj) files.

The .obj file format was developed for the Wavefront application developed by Alias. The format stores a description of the surface of a 3D object, composed of triangles or higher degree polygons.

For further information on using files, please see Opening Files (on page 39), Importing Files (on page 40), and Saving Files (on page 55).

The .objf file format (a derivative of the .obj format) is also supported. Stripe files have the following file structure:

- **Vertex data**: Geometric vertices (v), texture vertices (vt), and vertex normals (vn).

  Note: Vertices, textures and normals are each sequenced from 1.

- **Elements data**: Triangle strip (t) and triangle strip continuation (q).

Note: There are no import options associated with the .objf file format.

Example

The following is an example of Stripe file:

```
v 0.000000 0.000000 1.000000 # Vertex 1
v 1.000000 1.000000 0.000000 # Vertex 2
v 2.000000 0.000000 0.000000 # Vertex 3
v 3.000000 1.000000 0.000000 # Vertex 4
v 4.000000 0.000000 0.000000 # Vertex 5
v 3.000000 -1.000000 0.000000 # Vertex 6
v 4.000000 -1.000000 0.000000 # Vertex 7
v 2.000000 2.000000 0.000000 # Vertex 8
v 3.000000 2.000000 0.000000 # Vertex 9
v 3.000000 3.000000 0.000000 # Vertex 10
t 10 9 8 # Start of triangle strip 1
q 4 # Continuation of triangle strip 1
q 2 # Continuation of triangle strip 1
q 3 1 # Continuation of triangle strip 1
t 3 4 3 5 # Start of triangle strip 2
q 6 7 # Continuation of triangle strip 2
```

Interface

Import material file—Imports all material information from the .mtl file.

Flip coordinate system—Rotates the model so it uses a right-hand coordinate system. That is, it flips the Y and Z axes.

Copyright © Right Hemisphere 2007. All Rights Reserved.

XAML Export (.xaml)

You can export XAML (.xaml) files.

XAML (eXtensible Application Markup Language) is a declarative XML-based language that defines objects and their properties in XML. Export allows any 3D content to be translated into 3D XAML. These files can be directly integrated into your application development environment to create rich and engaging user experiences never before possible.

It provides developers and designers with a quick and easy solution for creating 3D content for Vista and 3D interface elements for Microsoft Windows Vista based applications.

XAML syntax focuses upon defining the UI for the Windows Presentation Foundation (WPF) and is therefore separate from the application code behind it.

For further information on using files, please see Opening Files (on page 39), Importing Files (on page 40), and Saving Files (on page 55).

Requirements

Microsoft Requirements (to view and render 3D XAML files)

- Windows Vista, or XP, Windows Server 2003, w SP2
- .NET 3.0

Not Supported

- Bone animation, skinning and morphing
- Polylines.
- Directional light type.
- Ambient materials.

Limitations

- Keyframe animation supports only the 'default' sequence.
- Material export: only diffuse, specular and emissive textures supported.
- Material animation: only colour and transparency animation supported.
- Cameras: only the current active camera is exported

Interface

Common—Used to establish the common settings.

- **Root element type**—XAML documents are xml based, so there must be a root element in every document. The Xaml plugin currently supports two elements as root elements
  - **Viewport3D**—This element defines a control which displays 3D content. XAML documents with this root element can have a camera and an animation definition and can be displayed by the standard XAML browser shipped with .Net 3 run-time. Internally Viewport3D contains Model3D-derived elements.
  - **Model3D**—This element defines functionality for 3D models. This is an abstract class so actually the resulting XAML document contains one of Model3D-derived classes - GeometryModel3D (this is a 3D model comprised of a mesh and a material), Light-derived class or Model3DGroup comprised of other Model3D-derived classes. Model3D cannot contain an animation and a camera definition and currently cannot be displayed by the standard XAML browser.
- **Animation behaviour**:

Copyright © Right Hemisphere 2007. All Rights Reserved.

  - **Play once**—Stops animation when it reaches the end.
  - **Repeat**—Play animation again when it reaches the end.
- **Include standalone viewer alongside with model**—Default value is Yes. The plugin copies an executable file with the same name as the result file, with the .exe file extension, to the same directory where the export result is created. It can be used to view the result of the export. To run the viewer you must have .Net 3.0 installed. The Microsoft .NET Framework 3.0 Redistributable Package can be downloaded from http://go.microsoft.com http://go.microsoft.com. If you are using Windows Vista you do not need to install this package, Windows Vista is shipped with .Net 3.0.
- **Launch viewer after export**—Default value is Yes. Deep Exploration launches the copied viewer after exporting the model.

Advanced Options

- **Export back materials**—This setting emulates double-sided materials.
- **Export default lights**—This setting enables you to export lights that are not present in the Scene Tree, these lights are those that illuminate the model when there are no lights in the Scene Tree. Usually it is useful to enable this setting when you export with the Viewport3D root element to view the model in the standard XAML browser.
- **Use quarternions for rotation**—If this setting is enabled then rotation transformations use the quaternion notation otherwise the axis/angle notation will be used.
- **Use scale / rotation / translation order for transformations**—This setting enables you to export transformations as a composition of three operations: scaling, rotation and translation instead of a more compact matrix notation. If animation is enabled this setting is forced.

Viewport3D Sizes—By default the Viewport3D element occupies the entire window of a viewer. The 'Viewport3D Sizes' settings enable you to reduce the maximum size of the Viewport3D element in a viewer/browser, by setting the **Max width** and the **Max height**.

OK—Closes the dialog. Any changes made to the settings are saved.

Cancel—Closes the dialog. Any changes made to the settings are lost.

Help—Opens the relevant Help topic.

Copyright © Right Hemisphere 2007. All Rights Reserved.

Appendix C: Audio File Formats

The following audio file formats are supported by Deep Exploration CAD and Standard Editions and Deep Server. This list is organized alphabetically by file format.

File Format	Type	Extension	View/ Import	Export	Version/Notes
Audio Interchange Format	Audio	AIF, AIFF	Yes (on page 543)		Play only.
MPEG Audio Files	Audio	MPA, MP2, MP3	Yes (on page 543)		Play only.
Musical Instrument Digital Interface	Audio	MID, MIDI	Yes (on page 543)		Play only.
RIFF MIDI File	Audio	RMI	Yes (on page 544)		Play only.
Sound Format	Audio	SND	Yes (on page 544)		Play only.
Sun/NeXT/DEC Audio	Audio	AU	Yes (on page 544)		Play only.
Waveform Audio	Audio	WAV	Yes (on page 544)		Play only.

Copyright © Right Hemisphere 2007. All Rights Reserved.

Audio Interchange Format (.aif, .aiff)

You can listen to Audio Interchange Format (.aif, .aiff) files.

The .aif and .aiff file formats were developed by Apple. AIF and AIFF files are not cross-platform and they are not supported by all Web browsers.

Note: When you open an audio file (on page 320), sound controls are displayed underneath the viewport. These allow you to control the sound.

For further information on using files, please see Opening Files (on page 39), Importing Files (on page 40), and Saving Files (on page 55).

MPEG Audio File Format (.mpa, .mp2, .mp3)

You can listen to MPEG Audio File Format (.mpa, .mp2, .mp3) files.

MP3 files are actually MPEG files. But the MPEG format was originally developed for video by the Moving Pictures Experts Group. We can say that MP3 files are the sound part of the MPEG video format.

MP3 is one of the most popular sound formats for music recording. The MP3 encoding system combines good compression (small files) with high quality: It is an audio compression format capable of a significant reduction in the amount of data required to reproduce audio, while sounding like an exact reproduction of the original audio. Expect all your future software systems to support it.

Note: When you open an audio file (on page 320), sound controls are displayed underneath the viewport. These allow you to control the sound.

For further information on using files, please see Opening Files (on page 39), Importing Files (on page 40), and Saving Files (on page 55).

Musical Instrument Digital Interface (.mid, .midi)

You can listen to Musical Instrument Digital Interface (.mid, .midi) files.

The MIDI (Musical Instrument Digital Interface) is a format for sending music information between electronic music devices like synthesizers and PC sound cards. It was developed in 1982 - long before the Internet -, but since it was developed by the music industry, it is very flexible and can be used for everything from very simple to real professional music making.

MIDI files do not contain sampled sound, but a set of digital musical instructions (musical notes) that can be interpreted by your PC's sound card.

The downside of MIDI is that it cannot record sounds (only notes). Or, to put it another way: It cannot store songs, only tunes. The upside of the MIDI format is that since it contains only instructions (notes), MIDI files can be extremely small. The example above is only 23K in size but it plays for nearly 5 minutes.

The MIDI format is supported by many different software systems over a large range of platforms. MIDI files are supported by all the most popular Internet browsers.

Note: When you open an audio file (on page 320), sound controls are displayed underneath the viewport. These allow you to control the sound.

For further information on using files, please see Opening Files (on page 39), Importing Files (on page 40), and Saving Files (on page 55).

Copyright © Right Hemisphere 2007. All Rights Reserved.

RIFF MIDI File (.rmi)

You can listen to RIFF MIDI File (.rmi) files.

The .rmi file format is actually a MIDI (Musical Instrument Digital Interface) file stored in the RIFF (Resource Interchange File Format). The .rmi file can store various file formats and resources including audio and image data. Note that this file format may not contain audio information.

Note: When you open an audio file (on page 320), sound controls are displayed underneath the viewport. These allow you to control the sound.

For further information on using files, please see Opening Files (on page 39), Importing Files (on page 40), and Saving Files (on page 55).

Sound Format (.snd)

You can listen to Sound Format (.snd) files.

The .snd file format was developed by Apple. SND files are not cross-platform and the format is not supported by all Web browsers.

Note: When you open an audio file (on page 320), sound controls are displayed underneath the viewport. These allow you to control the sound.

For further information on using files, please see Opening Files (on page 39), Importing Files (on page 40), and Saving Files (on page 55).

Sun/NeXT/DEC Audio (.au)

You can listen to Sun/NeXT/DEC Audio (.au) files.

The .au format is supported by many different software systems over a large range of platforms.

Note: When you open an audio file (on page 320), sound controls are displayed underneath the viewport. These allow you to control the sound.

For further information on using files, please see Opening Files (on page 39), Importing Files (on page 40), and Saving Files (on page 55).

Waveform Audio (.wav)

You can listen to Waveform Audio (.wav) files.

The .wave file format was developed by IBM and Microsoft. It is supported by all computers running Windows, and by all the most popular Web browsers.

Note: When you open an audio file (on page 320), sound controls are displayed underneath the viewport. These allow you to control the sound.

For further information on using files, please see Opening Files (on page 39), Importing Files (on page 40), and Saving Files (on page 55).

Copyright © Right Hemisphere 2007. All Rights Reserved.

Appendix D: Video File Formats

The following video file formats are supported by Deep Exploration CAD and Standard Editions and Deep Server. This list is organized alphabetically by file format.

File Format	Type	Extension	View/ Import	Export	Version/Notes
Advanced Streaming Format	Video	ASF	Yes (on page 546)		
Audio Video Interleave Animation	Video	AVI	Yes (on page 546)	Yes (on page 547)	
Moving Pictures Expert Group Video	Video	M1V, MPEG, MPG	Yes (on page 547)		

Copyright © Right Hemisphere 2007. All Rights Reserved.

Advanced Streaming Format (.asf)

You can view Advanced Streaming (.asf) files.

The .asf file format stores audio and video information and is specially designed to run over networks, such as the Internet. It is a highly flexible and compressed format that contains streaming audio, video, slide shows, and synchronized events.

For further information on using files, please see Opening Files (on page 39), Importing Files (on page 40), and Saving Files (on page 55).

Support

- First frame only.

Audio Video Interleave Animation (.avi)

You can view Audio Video Interleave Animation (.avi) files.

The .avi file format is Microsoft's Video for Windows standard and was developed for storing video and audio information.

For further information on using files, please see Opening Files (on page 39), Importing Files (on page 40), and Saving Files (on page 55).

Copyright © Right Hemisphere 2007. All Rights Reserved.

Audio Video Interleave Animation Export (.avi)

You can save files to the Audio Video Interleave Animation (.avi) format.

The .avi file format is Microsoft's Video for Windows standard and was developed for storing video and audio information.

For further information on using files, please see Opening Files (on page 39), Importing Files (on page 40), and Saving Files (on page 55).

Limitation

- To AVI format only; no conversion available.

Interface

Compressor—Selects the type of compression to apply to the file.

Compression Quality—Determines the quality with which to save the file.

Note: Not available for Intel IYUV codec, DiVX® 5.1.1 codec, or Full Frames (uncompressed).

Key frame every [number] frames—Determines the pixels that comprise each complete frame. The higher this value, the lower the quality and file size of the exported file.

Data rate [number] KB/sec—Opens the Cinepak for Windows 32 dialog and is used to determine the bandwidth requirements of the video and the amount of data to be transmitted for each frame.

Configure—Opens the dialog for the selected Compressor and compresses the file to either color or black and white.

Note: Not available for Intel Indeo® Video R3.2, Intel R3.2, Intel IYUV, for Full Frames (uncompressed).

About—Opens the dialog for the selected Compressor and displays its release information.

Note: Not available for Full Frames (uncompressed).

Moving Pictures Expert Group Video Format (.m1v, .mpeg, .mpg)

You can view Moving Pictures Expert Group Video (.m1v, .mpeg, .mpg) files.

The .m1v, .mpeg, .mpg file formats are the standard formats used on Video CDs and DVDs. MPEG is used to encode audio, video, text, and graphical data within a single, synchronized data stream.

For further information on using files, please see Opening Files (on page 39), Importing Files (on page 40), and Saving Files (on page 55).

Support

- First frame only.

Copyright © Right Hemisphere 2007. All Rights Reserved.

Appendix E: Motion Capture File Formats

The following motion capture file formats are supported by Deep Exploration CAD and Standard Editions and Deep Server. This list is organized alphabetically by file format.

File Format	Type	Extension	View/ Import	Export	Version/Notes
BioVision Hierarchical Data	Skeleton	BVH	Yes (on page 551)	Yes (on page 549)	
Character Studio	Marker	CSM	Yes (on page 552)	Yes (on page 552)	
Character Studio - Sub-format of BioVision Hierarchical Data	Skeleton	BVH (CS)	Yes (on page 551)	Yes (on page 549)	
Coordinate 3D	Marker	C3D	Yes (on page 553)		
Hierarchical Translations and Rotations	Skeleton	HTR	Yes (on page 553)		
Tracked Row Binary	Marker	TRB	Yes (on page 554)		
Tracked Row Character	Marker	TRC	Yes (on page 554)	Yes (on page 554)	

Copyright © Right Hemisphere 2007. All Rights Reserved.

BioVision Hierarchical Data and Character Studio Sub-Format Export (.bvh)

You can save files to the BioVision Hierarchical Data (.bvh) format. You can also enforce Character Studio restrictions that allow .bvh files to be read by Character Studio.

The BVH file format was originally developed by Biovision, a motion capture services company. It provides skeleton hierarchy information in addition to the motion capture data information. You can enforce Character Studio restrictions when exporting to the .bvh file format, allowing exported skeleton files to be read by Character Studio.

The Character Studio BVH motion capture file format is an ASCII file that is used to import rotational joint data from various motion capture systems into Character Studio to animate bipedal characters. These files are divided into two major sections: Hierarchy and Motion. The Hierarchy section describes the joint-to-joint connections and offsets for the sampled motion data, and the Motion section describes the movement of these individual joints on a per-sample basis.

Note: When exporting to the .bvh format, Character Studio requirements are met only if they are included correctly in the exported file.

For further information on using files, please see Opening Files (on page 39), Importing Files (on page 40), and Saving Files (on page 55).

Character Studio BVH File Format

The Character Studio BVH motion capture file format is an ASCII file that is used to import rotational joint data from various motion capture systems into Character Studio to animate bipedal characters.

These files are divided into two major sections: Hierarchy and Motion. The Hierarchy section describes the joint-to-joint connections and offsets for the sampled motion data, and the Motion section describes the movement of these individual joints on a per-sample basis.

Note: For further information, please see the Character Studio User Reference.

Interface

Switch axes—Switches the Y axis with the Z axis. This is helpful when motion displays sideways.

Restriction type—Used to establish the type of restriction used when exporting.

- **Unrestricted**—Does not enforce Character Studio restrictions. Exported skeleton files are not able to be read by Character Studio if you select this option. However, they can be read by all full-specification .bvh readers.
- **Allow position animation on root only**—Prevents any positional movement in .bvh skeletons. This movement does not occur naturally in human skeletons; however, it is produced in rare instances when creating bones in Deep Exploration. This option is helpful in maintaining the integrity of .bvh skeletons. Note that in some situations you may want to keep positional movement. For example, if a sword or other prop is linked to a hand.
- **Enforce Character Studio BVH format restrictions**—Used to enforce Character Studio restrictions. This allows exported skeleton files to be read by Character Studio.

Restrictions—Used to establish skeletal and bone settings for exported files.

- **Extra chest**— Exports skeletons with an extra 'chest' segment if the current skeleton has more than one chest segment. Note that if the current skeleton has only one chest segment, a zero length 'chest2' bone is created and exported using this option.
- **Head**—Uses the bone further down the chain determined by the selected offset as the start of the 'head' chain of bones for the exported file.

Copyright © Right Hemisphere 2007. All Rights Reserved.

- **Right hand**—Uses the bone further down the chain, determined by the selected offset, as the start of the 'right hand' chain of bones for the exported file.
- **Left hand**—Uses the bone further down the chain, determined by the selected offset, as the start of the 'left hand' chain of bones for the exported file.
- **Right foot**—Uses the bone further down the chain, determined by the selected offset, as the start of the 'right foot' chain of bones for the exported file.
- **Left foot**—Uses the bone further down the chain, determined by the selected offset, as the start of the 'left foot' chain of bones for the exported file.

Copyright © Right Hemisphere 2007. All Rights Reserved.

BioVision Hierarchical Data and Character Studio Sub-Format Import (.bvh)

You can import and view BioVision Hierarchical Data (.bvh) files and Character Studio Sub-format (.bvh) files.

The BVH file format was originally developed by Biovision, a motion capture services company. It provides skeleton hierarchy information in addition to the motion capture data information. You can enforce Character Studio restrictions when exporting to the .bvh file format, allowing exported skeleton files to be read by Character Studio.

The Character Studio BVH motion capture file format is an ASCII file that is used to import rotational joint data from various motion capture systems into Character Studio to animate bipedal characters. These files are divided into two major sections: Hierarchy and Motion. The Hierarchy section describes the joint-to-joint connections and offsets for the sampled motion data, and the Motion section describes the movement of these individual joints on a per-sample basis.

For further information on using files, please see Opening Files (on page 39), Importing Files (on page 40), and Saving Files (on page 55).

Character Studio BVH File Format

The Character Studio BVH motion capture file format is an ASCII file that is used to import rotational joint data from various motion capture systems into Character Studio to animate bipedal characters.

These files are divided into two major sections: Hierarchy and Motion. The Hierarchy section describes the joint-to-joint connections and offsets for the sampled motion data, and the Motion section describes the movement of these individual joints on a per-sample basis.

Note: For further information, please see the Character Studio User Reference.

Interface

Switch axes—Switches the Y axis with the Z axis. This is helpful when motion displays sideways.

Get base pose only—Imports the setup pose only. Usually this is with the character standing with hands on the hips, and elbows and legs turned outwards (akimbo), or in more of a cruciform pose (shaped like a cross).

Copyright © Right Hemisphere 2007. All Rights Reserved.

Character Studio Export (.csm)

You can save files to the BioVision Hierarchical Data (.bvh) format. You can also enforce Character Studio restrictions that allow .bvh files to be read by Character Studio.

The CSM format is an optical tracker format that is used by Discreet's 3ds Max Character Studio for importing marker data.

For CSM files to be compatible with Character Studio, they must use names that match the Character Studio setup and they must have an appropriate number of markers in the specified locations on the actor. The CSM format itself is capable of holding any kind of marker data, but being in the CSM format it is assumed that it also adheres to the name and marker configuration required by Character Studio.

For further information on using files, please see Opening Files (on page 39), Importing Files (on page 40), and Saving Files (on page 55).

Interface

Switch axes—Switches the Y axis with the Z axis. This is helpful when motion displays sideways.

Character Studio Import (.csm)

You can import and view Character Studio (.csm) files.

The CSM format is an optical tracker format that is used by Discreet's 3ds Max Character Studio for importing marker data.

For CSM files to be compatible with Character Studio, they must use names that match the Character Studio setup and they must have an appropriate number of markers in the specified locations on the actor. The CSM format itself is capable of holding any kind of marker data, but being in the CSM format it is assumed that it also adheres to the name and marker configuration required by Character Studio.

For further information on using files, please see Opening Files (on page 39), Importing Files (on page 40), and Saving Files (on page 55).

Interface

Switch axes—Switches the Y axis with the Z axis. This is helpful when motion displays sideways.

Approximate values—Uses approximate values to import the file. All figures to the right of the decimal point in every value relating to the imported file are ignored if this setting is selected, resulting in quicker browsing with lower precision. For example, a value of 0.76 becomes 0 after using this setting.

Note: If you export files after using this setting, without reloading using the original file values, the resulting exported file may have a significant loss in precision.

Copyright © Right Hemisphere 2007. All Rights Reserved.

Coordinate 3D Import (.c3d)

You can import and view Coordinate 3D (.c3d) files.

The C3D format stores 3D coordinate and analog data. All 3D coordinate and numeric data for any recorded measurement is stored in a single file, together with the various parameters that describe the data.

For further information on using files, please see Opening Files (on page 39), Importing Files (on page 40), and Saving Files (on page 55).

Interface

Switch axes—Switches the Y axis with the Z axis. This is helpful when motion displays sideways.

Approximate values—Uses approximate values to import the file. All figures to the right of the decimal point in every value relating to the imported file are ignored if this setting is selected, resulting in quicker browsing with lower precision. For example, a value of 0.76 becomes 0 after using this setting.

Note: If you export files after using this setting, without reloading using the original file values, the resulting exported file may have a significant loss in precision.

Hierarchical Translations and Rotations Import (.htr)

You can import and view Hierarchical Translations and Rotations (.htr) files.

The Hierarchical Translations and Rotations file format was developed as the native skeleton format for the Motion Analysis skeleton generating software and is used for motion analysis.

For further information on using files, please see Opening Files (on page 39), Importing Files (on page 40), and Saving Files (on page 55).

Interface

Switch axes—Switches the Y axis with the Z axis. This is helpful when motion displays sideways.

Get base pose only—Imports the setup pose only. Usually this is with the character standing with hands on the hips, and elbows and legs turned outwards (akimbo), or in more of a cruciform pose (shaped like a cross).

Copyright © Right Hemisphere 2007. All Rights Reserved.

Tracked Row Binary Import (.trb)

You can import and view Tracked Row Binary (.trb) files.

The TRB file format was created by Motion Analysis.

For further information on using files, please see Opening Files (on page 39), Importing Files (on page 40), and Saving Files (on page 55).

Interface

Switch axes—Switches the Y axis with the Z axis. This is helpful when motion displays sideways.

Approximate values—Uses approximate values to import the file. All figures to the right of the decimal point in every value relating to the imported file are ignored if this setting is selected, resulting in quicker browsing with lower precision. For example, a value of 0.76 becomes 0 after using this setting.

Note: If you export files after using this setting, without reloading using the original file values, the resulting exported file may have a significant loss in precision.

Tracked Row Character Export (.trc)

You can save files to the Tracked Row Character (.trc) format.

For further information on using files, please see Opening Files (on page 39), Importing Files (on page 40), and Saving Files (on page 55).

Interface

Switch axes—Switches the Y axis with the Z axis. This is helpful when motion displays sideways.

Tracked Row Character Import (.trc)

You can import and view Tracked Row Character (.trc) files.

For further information on using files, please see Opening Files (on page 39), Importing Files (on page 40), and Saving Files (on page 55).

Interface

Switch axes—Switches the Y axis with the Z axis. This is helpful when motion displays sideways.

Approximate values—Uses approximate values to import the file. All figures to the right of the decimal point in every value relating to the imported file are ignored if this setting is selected, resulting in quicker browsing with lower precision. For example, a value of 0.76 becomes 0 after using this setting.

Note: If you export files after using this setting, without reloading using the original file values, the resulting exported file may have a significant loss in precision.

Copyright © Right Hemisphere 2007. All Rights Reserved.

Appendix F: Material File Formats

The following material file formats are supported by Deep Exploration CAD and Standard Editions and Deep Server. This list is organized alphabetically by file format.

File Format	Type	Extension	View/ Import	Export	Version/Notes
Autodesk 3D Studio Material	Material	MLI	Yes (on page 556)		
Right Hemisphere Material	Material	RHM	Yes (on page 556)	Yes (on page 556)	
Wavefront Material	Material	MTL	Yes (on page 557)		

Copyright © Right Hemisphere 2007. All Rights Reserved.

Autodesk 3D Studio Material (.mli)

You can view Autodesk 3D Studio Material (.mli) files.

The .mli file format is used in the 3ds Studio Application developed by Autodesk to represent materials that are referenced in .max model files. MLI files contain Material-Library data.

For further information on using files, please see Opening Files (on page 39), Importing Files (on page 40), and Saving Files (on page 55).

Right Hemisphere Material (.rhm)

You can view Right Hemisphere Material (.rhm) files.

The .rhm file format was created by Right Hemisphere.

For further information on using files, please see Opening Files (on page 39), Importing Files (on page 40), and Saving Files (on page 55).

Right Hemisphere Material Export (.rhm)

You can save files to the Right Hemisphere Material file (.rhm) format.

The .rhm file format was created by Right Hemisphere. Using it you can save the materials that belong to a scene to a separate material file. You can also choose to save the default material, compress the exported file, apply protection, and create thumbnails of varying sizes.

For further information on using files, please see Opening Files (on page 39), Importing Files (on page 40), and Saving Files (on page 55).

Interface

Compression—Reduces the model's file size while maintaining the quality. Compression helps to reduce the amount of storage and transmission bandwidth required for 3D models.

File protection—Protects the exported file. Once the file is protected, you cannot save the file as anything other than an .rhm file format.

Export default material—Saves the default material in the file.

Thumbnail—Creates the specified size thumbnail image of the current model. The thumbnail image displays any setting that have been applied to the model. The thumbnail is displayed in Microsoft's Windows Explorer program (with Thumbnail view turned on). Alternately you can select to not create a thumbnail image.

- **No thumbnail**—Does not create a thumbnail.
- **[size]**—Used to select the width and height of the thumbnail, in pixels.

Copyright © Right Hemisphere 2007. All Rights Reserved.

Wavefront Material (.mtl)

You can view Wavefront Material (.mtl) files.

The .mtl file format was created by Alias/Wavefront to represent materials that are referenced in .obj model files (on page 538). They are in the ASCII format.

Comments begin with a '#' character in column 1. Blank lines may be inserted for clarity. Otherwise, the file consists of a sequence of 'newmtl' statements, followed by a definition of various properties for that material.

For further information on using files, please see Opening Files (on page 39), Importing Files (on page 40), and Saving Files (on page 55).

Copyright © Right Hemisphere 2007. All Rights Reserved.

Appendix G: Shader File Formats

The following shader file formats are supported by Deep Exploration CAD and Standard Editions and Deep Server. This list is organized alphabetically by file format.

File Format	Type	Extension	View/ Import	Export	Version/Notes
Real-Time Shader	Shader	FX	Yes (on page 559)		
Right Hemisphere Shader	Shader	RHS	Yes (on page 559)		

Copyright © Right Hemisphere 2007. All Rights Reserved.

Real-Time Shader (.fx)

You can view Real-Time Shader (.fx) files.

The .fx format is a real-time shader (on page 192): a program used to determine the final surface properties of an object. For example, color, reflectivity, and translucency of a surface.

For further information on using files, please see Opening Files (on page 39), Importing Files (on page 40), and Saving Files (on page 55).

Right Hemisphere Shader (.rhs)

You can view Right Hemisphere Shader (.rhs) files.

The .rhs format is a real-time shader (on page 192): a program used to determine the final surface properties of an object. For example, color, reflectivity, and translucency of a surface.

For further information on using files, please see Opening Files (on page 39), Importing Files (on page 40), and Saving Files (on page 55).

Copyright © Right Hemisphere 2007. All Rights Reserved.

Appendix H: CAD File Formats

The following CAD file formats are supported by Deep Exploration CAD Edition and Deep Server. This list is organized alphabetically by file format.

Note: While the 'save' dialog (on page 55)' is used to save to most CAD formats, the Vector Illustration tool (on page 163) can be used to save files to a number of additional CAD formats, such as .cgm. Certain formats can be saved using both methods, such as .dxf.

File Format	Type	Extension	View/ Import	Export	Version/Notes
AutoCAD Design Web Format	Scene	DWF	Yes (on page 562)	Yes (on page 563)	Versions 7 and earlier.
AutoCAD Drawing Interchange	Scene	DXF	Yes (on page 565)	Yes (on page 564)*	Versions 12, 13, 14, 2000-2007. *Export is also via Vector Illustration.
AutoCAD Drawing Object	Scene	DWG	Yes (on page 567)	Yes (on page 569)	Versions 12, 13, 14, 2000-2008.
AutoCAD Sheet Set File	Scene	DST	Yes (on page 570)		Versions 7 and earlier.
Autodesk Inventor Assembly	Scene	IAM	Yes (on page 571)		Versions 11 and earlier.
Autodesk Inventor Part	Scene	IPT	Yes (on page 573)		Versions 11 and earlier.
CADKEY Advanced Design Language	Scene	CDL	Yes (on page 575)		CADL versions 4-20.
CATIA	Scene	CGR, DLV, MODEL, SESSION	Yes (on page 578, on page 576)		Versions 3.x and 4.x.
CATIA5	Scene	CATPART, CATPRODUCT	Yes (on page 583, on page 581)		Versions 5.x up to R17.
Computer Graphics Metafile	Scene	CGM	Yes (on page 589)	Yes (on page 588)*	*Export: Version 3.0. Export via Vector Illustration.
Granite File	Scene	G	Yes (on page 590)		Wildfire 3.
Hewlett-Packard Graphics Library	Scene	HPGL, PLT	Yes (on page 593)		HPGL 1 and HPGL 2.
IGES Files	Scene	IGES, IGS	Yes (on page 596, on page 594)		Method A: Versions 5.1, 5.2, and 5.3. Legacy: Versions 5.1.
IronCAD 3D CAD	Scene	ICS	Yes		Optional download with purchase of the Pro/E Module. Deep Server only.
JT File	Scene	JT	Yes	Yes (on page 600)*	Method A: Versions 8.0 and earlier. Legacy: Versions 8.1 and earlier. *Export: Requires the JT/PMI Module to be installed.
Lattice XVL Structure and Geometry	Scene	XV0, XV3	Yes (on page 607, on page 606)		Version 3.
MicroStation CAD Graphic	Scene	DGN	Yes (on page 609)		Versions 95, SE, J, 7, and 8.
Neutral Part File	Scene	NEU	Yes (on page 613, on page 611)		Versions 14 - Wildfire 3.

Copyright © Right Hemisphere 2007. All Rights Reserved.

File Format	Type	Extension	View/ Import	Export	Version/Notes
Parasolid CAD File	Scene	X_B, X_T, XMT, XMT_TXT	Yes (on page 619, on page 617)		Method A: Versions 16 and earlier. Legacy: Versions 3-14.
Pro/ENGINEER Assembly	Scene	ASM, XAS	Yes (on page 626, on page 623)		Method A: Versions 18, 19, 20, 2000i, 2001, Wildfire 1-3. Legacy: Versions 18, 19, 20, 2000i, 2001, Wildfire 1-3.
Pro/ENGINEER Part	Scene	PRT, XPR	Yes (on page 632, on page 629)		Method A: Versions 18, 19, 20, 2000i, 2001, Wildfire 1-3. Legacy: Versions 18, 19, 20, 2000i, 2001, Wildfire 1-3.
Pro/ENGINEER drawing	Scene	DRW	Yes		Up to Wildfire 3. Deep Server only.
PTC Pro/DESKTOP	Scene	DES	Yes		Versions 7-8. Optional download with purchase of the Pro/E Module. Deep Server only.
Raindrop Geomagic 3D Modelling	Scene	WRP	Yes		Versions 5 and above. Optional download with purchase of the Pro/E Module. Deep Server only.
SDRC I-DEAS Model	Scene	ARC, MF1	Yes (on page 635)		Method A: Versions 2.x, 6.x - 11.x, and R12.
SDRC I-DEAS Package	Scene	PKG	Yes (on page 637)		Method A: Versions 2.x, 6.x - 11.x, and R12.
SDRC I-DEAS Universal	Scene	UNV	Yes (on page 639)		Method A: Versions 2.x, 6.x - 11.x, and R12.
SolidEdge 3D CAD Model Part	Scene	PAR	Yes (on page 641)		Version 16 and earlier.
SolidWorks Part and Assembly Files	Scene	SLDASM, SLDLFP, SLDPRT	Yes (on page 643)		Method A: Versions 97-2007. Legacy: Versions 97-2007.
SolidWorks Drawing	Scene	SLDDRW	Yes (on page 645)		Method A: Versions 97-2007. Legacy: Versions 97-2007.
Standard ACIS Text	Scene	SAT	Yes (on page 649, on page 647)		Method A: ACIS release 16 and earlier. Legacy: ACIS release 16 and earlier.
Standard ACIS Binary	Scene	SAB	Yes (on page 655, on page 653)		Method A: ACIS release 16 and earlier. Legacy: ACIS release 16 and earlier.
STEP Files	Scene	STEP, STP	Yes (on page 661, on page 659)		AP204 and AP214.
Unigraphics Parts and Assemblies	Scene	PRT	Yes (on page 667, on page 665)		Method A: Releases 13-18, NX1, NX2, NX3 and NX4. Legacy: Releases 13-18, NX1, NX2, NX3, and NX4.
VDA File	Scene	VDA	Yes (on page 670)		Version 2.0 and earlier.
Wavefront Studio Wireframe	Scene	WIRE	Yes		Version 10. Optional download with purchase of the Pro/E Module. Deep Server only.

Copyright © Right Hemisphere 2007. All Rights Reserved.

AutoCAD Design Web Format Import (.dwf)

You can import and view AutoCAD Design Web Format (.dwf) files.

The .dwf file format is a binary file used by AutoDesk AutoCAD for publishing models and drawings on the Internet. It is a package file format (based on .zip) and can contain either 2D or 3D files along with resources such as texture maps and BOM/object manifests.

2D files are stored internally as .w2d files, and contain vector-based description of drawings and illustrations. It is common for there to be more than one .w2d page in a DWF file. 3D files are stored internally as .w3d files (based on the Hoops Stream Format); currently the only producers of these files (AutoCAD products) store only .w3d per DWF file.

Because .dwf files are highly compressed, they are smaller and faster to transmit than design files, without the overhead associated with typical CAD drawings (or the management of external links and dependencies); publishers of design data can select the specific design data and plot styles they want recipients to see, and can publish multi-sheet drawing sets from multiple .dwg source files into a single DWF file. They can also publish 3D models from nearly every Autodesk design application.

For further information on using files, please see Opening Files (on page 39), Importing Files (on page 40), and Saving Files (on page 55).

Supports

- Cameras.

Interface

Import pages—Used to determine whether one or all pages are imported for multi-page files.

- **All**—Imports each page as a model view **(on page 77)**.
- **First**—Imports only the first page.

Show paper in 2D views—Used to determine whether a paper object is created for the scene for 2D pages. Paper objects are similar to the Deep Exploration grid.

- **Always**—Always creates a paper object according to the paper size specified in the file.
- **Never**—Does not create a paper object.
- **By file**—Creates a paper object if the paper is visible in the file.

Import TrueType fonts as—Used to determine in which way TrueType fonts are imported.

- **Polygons**—Imports fonts as tessellated polygons (solid fill).
- **Outlines**—Imports fonts as polylines (contours). This is the fastest method for importing text.
- **Character primitives**—Imports fonts as character primitives. These are able to be edited in the same way as a normal primitive (on page 182). This is the slowest method for importing text. Note that each character is a separate object and so any editing may take some time.

Copyright © Right Hemisphere 2007. All Rights Reserved.

AutoCAD Design Web Format Export (.dwf)

You can save files to the AutoCAD Design Web Format (.dwf) format.

The .dwf file format is a binary file used by AutoDesk AutoCAD for publishing models and drawings on the Internet. It is a package file format (based on .zip) and can contain either 2D or 3D files along with resources such as texture maps and BOM/object manifests.

2D files are stored internally as .w2d files, and contain vector-based description of drawings and illustrations. It is common for there to be more than one .w2d page in a DWF file. 3D files are stored internally as .w3d files (based on the Hoops Stream Format); currently the only producers of these files (AutoCAD products) store only .w3d per DWF file.

Because .dwf files are highly compressed, they are smaller and faster to transmit than design files, without the overhead associated with typical CAD drawings (or the management of external links and dependencies); publishers of design data can select the specific design data and plot styles they want recipients to see, and can publish multi-sheet drawing sets from multiple .dwg source files into a single DWF file. They can also publish 3D models from nearly every Autodesk design application.

For further information on using files, please see Opening Files (on page 39), Importing Files (on page 40), and Saving Files (on page 55).

Limitations

- Exporting 2D-multi page or 3D single page.
- Export of callouts and sprites.
- Cameras.

Interface

Mode—Used to determine the method used to export the file.

- **Auto-select**—Saves multi-page or obviously 2D files (flat, viewed orthogonally from top) as a 2D file. Otherwise, exports the file as 3D file.
- **2D image**—Each model view **(on page 77)** is projected and flattened to a 2D plane; solid shapes and polylines are exported. This option is only available for 2D files.
- **3D model**—Saves the first model view (or active view if there are no model views) as the 3D file.

Copyright © Right Hemisphere 2007. All Rights Reserved.

AutoCAD Drawing Interchange Export (.dxf)

You can save files to the AutoCAD Drawing Interchange (.dxf) format.

The .dxf file format enables the interchange of drawings between AutoCAD and other programs. They can be in either ASCII or binary format, both of which contain a complete description of the AutoCAD drawing. DXF files contain a number of entities such as curves, lines, solids, polygons etc. These are read from within the file and are then created as objects.

For further information on using files, please see Opening Files (on page 39), Importing Files (on page 40), and Saving Files (on page 55).

Support

- Each object is saved as a separate block.
- Materials are converted to layers.
- Diffuse material color is used as layer color number.
- The default 'INSERT' is used to represent hierarchical information in scene.
- Meshes and 2D vector data (text, dimensions).
- Cameras.
- Parts information.
- Assembly hierarchy information.
- Importing different Model-Space Layouts.
- Import solid entities as meshes.

Limitations

- Solid data and NURBS information is not imported.
- Tessellation control is not supported.
- Animation is not supported.
- BOM support based on part names is not supported.
- Textures and UV mapping are not supported.
- Configurations are not supported.

Interface

Common—Used to establish the common settings.

- **Export by layer**—Used to establish how to export the layer settings.
  - **Layer by object**—Saves each object in separate layers.
  - **Layer by material**—Saves all objects that use the same material into a single layer.

Copyright © Right Hemisphere 2007. All Rights Reserved.

AutoCAD Drawing Interchange Import (.dxf)

You can import and view AutoCAD Drawing Interchange (.dxf) files.

The .dxf file format enables the interchange of drawings between AutoCAD and other programs. They can be in either ASCII or binary format, both of which contain a complete description of the AutoCAD drawing. DXF files contain a number of entities such as curves, lines, solids, polygons etc. These are read from within the file and are then created as objects.

For further information on using files, please see Opening Files (on page 39), Importing Files (on page 40), and Saving Files (on page 55).

Support

- ASCII and binary format.
- Dimensions are imported as 3D polylines.
- Layer names can be seen in the Scene tree.
- Data is read as meshes or 3D polylines.
- Layout information is imported if any is present in the file.
- Models that have 256 color.
- Cameras.
- Models that have materials with values such as specular, reflection, and opacity.
- Materials can be either attached to entities or attached to layers. For example, if a material called WOOD is attached to entity A, then entity A has the WOOD material. Or, if the WOOD material is attached to Layer 1, then all the entities under Layer 1 have that WOOD material.

Interface

Common—Used to establish the common settings.

- **Layout**—Used to establish which layouts to import.
  - **Import active layout**—Imports only the active layout saved within the selected file.
  - **Import all layouts**—Imports all the layouts within the selected file.
  - **Import Model-Space layout**—Imports only the Model-Space layout within the selected file.
- **Viewport shading**—Used to determine the way in which the file shading is displayed in the viewport.
  - **From file**—Displays the file with shading from within the file.
  - **2D wireframe**—Displays the file with a special 2D wireframe style; created by AutoCAD.
- **Import hidden layers**—Imports any hidden layers.
- **Import line types**—Used to determine the way in which lines are imported.
  - **Continuous lines**—Imports all lines as polylines with the style attributes stored in the materials. Any complex line styles are lost.
  - **Complex as geometry**—Imports all lines as polylines with the style attributes stored in the materials, and tessellates complex lines into the model's geometry. Note that this option increases memory use.
  - **All as geometry**—Tessellates all lines into the model's geometry without storing style attributes. This option is helpful for files that do not support line styles such as .u3d files. Note that this option increases memory use and imported files are of a larger size.
- **Import text**—Used to determine the way in which text is imported.

Copyright © Right Hemisphere 2007. All Rights Reserved.

  - **As polylines**—Imports TrueType text as polylines (outlines/contours).
  - **As polygons**—Imports TrueType text as solid polygons. This option increases import time and memory use.
- **Model-Space Layout**—Used to determine the way in which the Model-Space Layout is imported.
  - **Model shading**—Used to determine the way in which the Model-Space Layout shading is displayed.
    - **From file**—Displays the Model-Space Layout with shading from within the file.
    - **2D wireframe**—Displays the Model-Space Layout with a special 2D wireframe style; created by AutoCAD.
    - **Gouraud shaded**—Displays a solid view of the Model-Space Layout.
  - **Zoom to extents**—Zooms the file to its extents in the viewport.
  - **Dark background palette**—Uses a different color palette depending on whether the background is dark or light. This option only functions for file's that use indexed colors, and does not affect true colors.

Geometry Transform (on page 41)—Used to transform (rotate, position, and scale) the scene along the X, Y, and Z axes.

- **Rotation**—Used to set the degrees of rotation around each axis from 0 to 360 degrees. The rotation values can be entered with up to 6 decimal places.
  - **X**—Rotates the scene along the X axis.
  - **Y**—Rotates the scene along the Y axis.
  - **Z**—Rotates the scene along the Z axis.
- **Position**—Used to set the position of the scene along the X, Y, and Z axes.
  - **X**—Positions the scene along the X axis.
  - **Y**—Positions the scene along the Y axis.
  - **Z**—Positions the scene along the Z axis.
- **Scale**—Used to scale the object along the X, Y, and Z axes.
  - **X**—Scales the scene along the X axis.
  - **Y**—Scales the scene along the Y axis.
  - **Z**—Scales the scene along the Z axis.

Copyright © Right Hemisphere 2007. All Rights Reserved.

AutoCAD Drawing Object Import (.dwg)

You can import and view AutoCAD Drawing Object (.dwg) files.

The .dwg file format is a binary format only and is the principle format used by AutoCAD. It contains a complete description of the AutoCAD drawing including viewport positions and the active layout. DWG files contain a number of entities such as curves, lines, solids, and polygons. These are read from within the file and are then created as objects.

For further information on using files, please see Opening Files (on page 39), Importing Files (on page 40), and Saving Files (on page 55).

Support

- 2D vector data.
- Assembly hierarchy.
- Dimensions are imported as 3D polylines.
- Layer names can be seen in the Layers panel.
- Data is read as meshes or 3D polylines.
- Layout information, if any is present in the file, is imported as model views.
- Cameras.
- Meshes.
- Models can use indexed or true color.
- Models that have materials with values such as specular, reflection, and opacity.
- Materials can be either attached to entities or attached to layers. For example, if a material called WOOD is attached to entity A, then entity A has the WOOD material. Or, if the WOOD material is attached to Layer 1, then all the entities under Layer 1 have that WOOD material.
- Parts data.
- Solids are imported as meshes.

Limitations

- Animation.
- BOM support based on part names.
- Configurations.
- NURBS/Solids.
- Tessellation control.
- Textures.
- UV coordinates.

Interface

Common—Used to establish the common settings.

- **Layout**—Used to establish which layouts to import.
  - **Import active layout**—Imports only the active layout saved within the selected file.
  - **Import all layouts**—Imports all the layouts within the selected file.
  - **Import Model-Space layout**—Imports only the Model-Space layout within the selected file.

Copyright © Right Hemisphere 2007. All Rights Reserved.

- **Viewport shading**—Used to determine the way in which the file shading is displayed in the viewport.
  - **From file**—Displays the file with shading from within the file.
  - **2D wireframe**—Displays the file with a special 2D wireframe style; created by AutoCAD.
- **Import hidden layers**—Imports any hidden layers.
- **Import line types**—Used to determine the way in which lines are imported.
  - **Continuous lines**—Imports all lines as polylines with the style attributes stored in the materials. Any complex line styles are lost.
  - **Complex as geometry**—Imports all lines as polylines with the style attributes stored in the materials, and tessellates complex lines into the model's geometry. Note that this option increases memory use.
  - **All as geometry**—Tessellates all lines into the model's geometry without storing style attributes. This option is helpful for files that do not support line styles such as .u3d files. Note that this option increases memory use and imported files are of a larger size.
- **Import text**—Used to determine the way in which text is imported.
  - **As polylines**—Imports TrueType text as polylines (outlines/contours).
  - **As polygons**—Imports TrueType text as solid polygons. This option increases import time and memory use.
- **Model-Space Layout**—Used to determine the way in which the Model-Space Layout is imported.
  - **Model shading**—Used to determine the way in which the Model-Space Layout shading is displayed.
    - **From file**—Displays the Model-Space Layout with shading from within the file.
    - **2D wireframe**—Displays the Model-Space Layout with a special 2D wireframe style; created by AutoCAD.
    - **Gouraud shaded**—Displays a solid view of the Model-Space Layout.
  - **Zoom to extents**—Zooms the file to its extents in the viewport.
  - **Dark background palette**—Uses a different color palette depending on whether the background is dark or light. This option only functions for file's that use indexed colors, and does not affect true colors.

Geometry Transform (on page 41)—Used to transform (rotate, position, and scale) the scene along the X, Y, and Z axes.

- **Rotation**—Used to set the degrees of rotation around each axis from 0 to 360 degrees. The rotation values can be entered with up to 6 decimal places.
  - **X**—Rotates the scene along the X axis.
  - **Y**—Rotates the scene along the Y axis.
  - **Z**—Rotates the scene along the Z axis.
- **Position**—Used to set the position of the scene along the X, Y, and Z axes.
  - **X**—Positions the scene along the X axis.
  - **Y**—Positions the scene along the Y axis.
  - **Z**—Positions the scene along the Z axis.
- **Scale**—Used to scale the object along the X, Y, and Z axes.
  - **X**—Scales the scene along the X axis.
  - **Y**—Scales the scene along the Y axis.
  - **Z**—Scales the scene along the Z axis.

Copyright © Right Hemisphere 2007. All Rights Reserved.

AutoCAD Drawing Object Export (.dwg)

You can save files to the AutoCAD Drawing Object (.dwg) format.

The .dwg file format is a binary format only and is the principle format used by AutoCAD. It contains a complete description of the AutoCAD drawing including viewport positions and the active layout. DWG files contain a number of entities such as curves, lines, solids, and polygons. These are read from within the file and are then created as objects.

For further information on using files, please see Opening Files (on page 39), Importing Files (on page 40), and Saving Files (on page 55).

Interface

Output Version—Used to establish the version of AutoCAD to output to.

Copyright © Right Hemisphere 2007. All Rights Reserved.

AutoCAD Sheet Set File Import (.dst)

You can import and view AutoCAD Sheet Set (.dst) files.

The .dst format was also introduced with AutoCAD 2005.

For further information on using files, please see Opening Files (on page 39), Importing Files (on page 40), and Saving Files (on page 55).

Interface

Common—Used to establish the common settings.

- **Viewport shading**—Used to determine the way in which the file shading is displayed in the viewport.
  - **From file**—Displays the file with shading from within the file.
  - **2D wireframe**—Displays the file with a special 2D wireframe style; created by AutoCAD.
- **Import hidden layers**—Imports any hidden layers.
- **Import line types**—Used to determine the way in which lines are imported.
  - **Continuous lines**—Imports all lines as polylines with the style attributes stored in the materials. Any complex line styles are lost.
  - **Complex as geometry**—Imports all lines as polylines with the style attributes stored in the materials, and tessellates complex lines into the model's geometry. Note that this option increases memory use.
  - **All as geometry**—Tessellates all lines into the model's geometry without storing style attributes. This option is helpful for files that do not support line styles such as .u3d files. Note that this option increases memory use and imported files are of a larger size.
- **Import text**—Used to determine the way in which text is imported.
  - **As polylines**—Imports TrueType text as polylines (outlines/contours).
  - **As polygons**—Imports TrueType text as solid polygons. This option increases import time and memory use.

Copyright © Right Hemisphere 2007. All Rights Reserved.

Autodesk Inventor Assembly Import (.iam)

You can import and view Autodesk Inventor Assembly (.iam) files.

For further information on using files, please see Opening Files (on page 39), Importing Files (on page 40), and Saving Files (on page 55).

Support

- Assembly hierarchy.
- Meshes.
- Parts data.
- Material and object names.

Limitations

- 2D vector data.
- Animation.
- BOM support based on part names.
- Configurations.
- Solids/NURBS.
- Textures.
- UV coordinates.

Interface

Tessellation (on page 42)—Used to establish the tessellation (arrangement and density of the polygons) settings. Note that if you enter 0 (zero) for any of the tessellation settings, they are not taken into effect during the tessellation process.

- **Import with existing surface deviation** (on page 42)—Imports the file using the file's surface deviation values. Otherwise, the file is imported with the value specified in the 'Surface deviation' option.
- **Surface deviation** (on page 42)—Determines the maximum distance allowed between original analytical surface and its tessellated representation. Triangle edges do not deviate from edges of the face by more than this amount. The units are expressed as unit size based on those used by the model. A smaller surface deviation produces more triangles for smoother models.

Geometry Transform (on page 41)—Used to transform (rotate, position, and scale) the scene along the X, Y, and Z axes.

- **Rotation**—Used to set the degrees of rotation around each axis from 0 to 360 degrees. The rotation values can be entered with up to 6 decimal places.
  - **X**—Rotates the scene along the X axis.
  - **Y**—Rotates the scene along the Y axis.
  - **Z**—Rotates the scene along the Z axis.
- **Position**—Used to set the position of the scene along the X, Y, and Z axes.
  - **X**—Positions the scene along the X axis.
  - **Y**—Positions the scene along the Y axis.
  - **Z**—Positions the scene along the Z axis.
- **Scale**—Used to scale the object along the X, Y, and Z axes.

Copyright © Right Hemisphere 2007. All Rights Reserved.

- **X**—Scales the scene along the X axis.
- **Y**—Scales the scene along the Y axis.
- **Z**—Scales the scene along the Z axis.

Copyright © Right Hemisphere 2007. All Rights Reserved.

Autodesk Inventor Part Import (.ipt)

You can import and view Autodesk Inventor Part (.ipt) files.

For further information on using files, please see Opening Files (on page 39), Importing Files (on page 40), and Saving Files (on page 55).

Support

- Assembly hierarchy.
- Meshes.
- Parts data.
- Material and object names.

Limitations

- 2D vector data.
- Animation.
- BOM support based on part names.
- Configurations.
- Solids/NURBS.
- Textures.
- UV coordinates.

Interface

Tessellation (on page 42)—Used to establish the tessellation (arrangement and density of the polygons) settings. Note that if you enter 0 (zero) for any of the tessellation settings, they are not taken into effect during the tessellation process.

- **Import with existing surface deviation** (on page 42)—Imports the file using the file's surface deviation values. Otherwise, the file is imported with the value specified in the 'Surface deviation' option.
- **Surface deviation** (on page 42)—Determines the maximum distance allowed between original analytical surface and its tessellated representation. Triangle edges do not deviate from edges of the face by more than this amount. The units are expressed as unit size based on those used by the model. A smaller surface deviation produces more triangles for smoother models.

Geometry Transform (on page 41)—Used to transform (rotate, position, and scale) the scene along the X, Y, and Z axes.

- **Rotation**—Used to set the degrees of rotation around each axis from 0 to 360 degrees. The rotation values can be entered with up to 6 decimal places.
  - **X**—Rotates the scene along the X axis.
  - **Y**—Rotates the scene along the Y axis.
  - **Z**—Rotates the scene along the Z axis.
- **Position**—Used to set the position of the scene along the X, Y, and Z axes.
  - **X**—Positions the scene along the X axis.
  - **Y**—Positions the scene along the Y axis.
  - **Z**—Positions the scene along the Z axis.
- **Scale**—Used to scale the object along the X, Y, and Z axes.

Copyright © Right Hemisphere 2007. All Rights Reserved.

- **X**—Scales the scene along the X axis.
- **Y**—Scales the scene along the Y axis.
- **Z**—Scales the scene along the Z axis.

Copyright © Right Hemisphere 2007. All Rights Reserved.

CADKEY Advanced Design Language Import (.cdl)

You can import and view CADKEY Advanced Design Language (.cdl) file.

For further information on using files, please see Opening Files (on page 39), Importing Files (on page 40), and Saving Files (on page 55).

Support

- Assembly hierarchy.
- Meshes.
- Parts data.
- Material and object names.

Limitations

- 2D vector data.
- Animation.
- BOM support based on part names.
- Configurations.
- Solids/NURBS.
- Tessellation control.
- Textures.
- UV coordinates.

Interface

Geometry Transform (on page 41)—Used to transform (rotate, position, and scale) the scene along the X, Y, and Z axes.

- **Rotation**—Used to set the degrees of rotation around each axis from 0 to 360 degrees. The rotation values can be entered with up to 6 decimal places.
  - **X**—Rotates the scene along the X axis.
  - **Y**—Rotates the scene along the Y axis.
  - **Z**—Rotates the scene along the Z axis.
- **Position**—Used to set the position of the scene along the X, Y, and Z axes.
  - **X**—Positions the scene along the X axis.
  - **Y**—Positions the scene along the Y axis.
  - **Z**—Positions the scene along the Z axis.
- **Scale**—Used to scale the object along the X, Y, and Z axes.
  - **X**—Scales the scene along the X axis.
  - **Y**—Scales the scene along the Y axis.
  - **Z**—Scales the scene along the Z axis.

Copyright © Right Hemisphere 2007. All Rights Reserved.

CATIA Import (.cgr, .dlv, .model, .session)

You can import and view CATIA 4 (.cgr, .dlv, .model, .session) files.

CATIA is the file format used in the CAD applications developed by Dassault Systems and is one of the most popular CAD applications.

The import options differ depending on the version of Deep Exploration you have installed:

- Certain options are available with the CAD Edition of Deep Exploration.
- Certain options are available with the Standard Edition of Deep Exploration and the CATIA Module.

Note that support for the CAD format versions (on page 560) also differs depending on the version of Deep Exploration you have installed.

CATIA Model CAD Edition Import

You can import and view CATIA 4 (.cgr, .dlv, .model) files using the import options delivered with the CAD Edition of Deep Exploration.

For further information on using files, please see Opening Files (on page 39), Importing Files (on page 40), and Saving Files (on page 55).

Support

- 2D vector data.
- Materials and object names.
- Meshes.
- Parts data.
- Tessellation control.

Limitations

- Animation.
- Assembly hierarchy.
- BOM support based on part names.
- Configurations.
- NURBS/Solids.
- Textures.
- UV coordinates.
- Points are not supported when importing using Method A, unless they are part of PMI data and you have the PMI Module (on page 220) installed.

Interface

Common—Used to establish the common settings including tessellation (arrangement and density of the polygons) settings. Note that if you enter 0 (zero) for any of the tessellation settings, they are not taken into effect during the tessellation process.

Copyright © Right Hemisphere 2007. All Rights Reserved.

- **Surface deviation** (on page 42)—Determines the maximum distance allowed between original analytical surface and its tessellated representation. Triangle edges do not deviate from edges of the face by more than this amount. The units are expressed as unit size based on those used by the model. A smaller surface deviation produces more triangles for smoother models.
- **Normal deviation** (on page 42)—Determines the maximum angular deviation (in degrees) allowed between a analytical surface and its triangulation. Pairs of triangles do not incorporate a dihedral angle greater than this amount. For example, this setting dictates the minimum number of facets around a smaller circle or cylinder regardless of the Surface Deviation setting. This parameter gives you added control over faces with very small radii. Lower values result in finer tessellations, while higher values give coarser tessellations.
- **Import hidden objects**—Imports all hidden objects. If, after importing a file, you modify any visible objects that contain hidden sub-objects after import, those hidden objects are also modified.
- **Display hidden objects**—Displays all hidden objects in the viewport after importing the file.
- **Import sheet bodies**—Imports all construction geometry. Sheet bodies are flat surfaces from which each object is cut.

  Note: If a file contains sheet bodies, this option must be selected for the file to be imported correctly.

- **Import wireframes**—Imports all wireframes if any exist.
- **Import Metadata**—Imports file metadata from original CAD file (stored inside RH file as 'CADmetadata' category).
- **Unit**—Used to select the unit type for which you want to view its custom unit (scene unit) measurement in meters. For example, 1 custom unit = 0.01 meters.
  - **File default**—Imports the file using the file's units.
  - **Millimeters**—Imports the file in millimeters (mm).
  - **Centimeters**—Imports the file in centimeters (cm).
  - **Meters**—Imports the file in meters (m).
  - **Inches**—Imports the file in inches (in).
  - **Feet**—Imports the file in feet (ft).
- **Ignore material opacity**—Disregards any material transparency that may have been set in the original file via an external application. That is, all the objects appear opaque. For example, a material opacity of 30% for an object is ignored, and the object is displayed with 100% opacity.
- **Auto-correct view orientation**—Attempts to correct the file's original view orientation to align with Deep Exploration's view orientation.
- **Import PMI** (on page 220)—Imports any Product Manufacturing Information (PMI) within the file. The PMI data objects can be accessed from within the 3D Objects list. Note that you must have the 'Show Markups (on page 257)' command on to view PMI data in the viewport.

Geometry Transform (on page 41)—Used to transform (rotate, position, and scale) the scene along the X, Y, and Z axes.

- **Rotation**—Used to set the degrees of rotation around each axis from 0 to 360 degrees. The rotation values can be entered with up to 6 decimal places.
  - **X**—Rotates the scene along the X axis.
  - **Y**—Rotates the scene along the Y axis.
  - **Z**—Rotates the scene along the Z axis.
- **Position**—Used to set the position of the scene along the X, Y, and Z axes.

Copyright © Right Hemisphere 2007. All Rights Reserved.

  - **X**—Positions the scene along the X axis.
  - **Y**—Positions the scene along the Y axis.
  - **Z**—Positions the scene along the Z axis.
- **Scale**—Used to scale the object along the X, Y, and Z axes.
  - **X**—Scales the scene along the X axis.
  - **Y**—Scales the scene along the Y axis.
  - **Z**—Scales the scene along the Z axis.

CATIA Module Import

You can import and view CATIA (.cgr, .dlv, .model, .session) files using the import options delivered with the Standard Edition of Deep Exploration and the CATIA Module.

For further information on using files, please see Opening Files (on page 39), Importing Files (on page 40), and Saving Files (on page 55).

Support

- 2D vector data is supported when importing using Method A.
- Materials and object names.
- Meshes.
- Parts data.
- Tessellation control.
- UV coordinates are supported when importing using the Legacy method.

Limitations

- 2D vector data is not supported when importing using the Legacy method.
- Animation.
- Assembly hierarchy.
- BOM support based on part names.
- Configurations.
- NURBS/Solids data.
- Textures.
- UV coordinates are not supported when importing using Method A.
- Points are not supported when importing using Method A, unless they are part of PMI data and you have the PMI Module (on page 220) installed.

Interface

Common—Used to establish the common settings including tessellation (arrangement and density of the polygons) settings. Note that if you enter 0 (zero) for any of the tessellation settings, they are not taken into effect during the tessellation process.

- **Surface deviation** (on page 42)—Determines the maximum distance allowed between original analytical surface and its tessellated representation. Triangle edges do not deviate from edges of the face by more than this amount. The units are expressed as unit size based on those used by the model. A smaller surface deviation produces more triangles for smoother models.

Copyright © Right Hemisphere 2007. All Rights Reserved.

- **Normal deviation** (on page 42)—Determines the maximum angular deviation (in degrees) allowed between a analytical surface and its triangulation. Pairs of triangles do not incorporate a dihedral angle greater than this amount. For example, this setting dictates the minimum number of facets around a smaller circle or cylinder regardless of the Surface Deviation setting. This parameter gives you added control over faces with very small radii. Lower values result in finer tessellations, while higher values give coarser tessellations.
- **Import sheet bodies**—Imports all construction geometry. Sheet bodies are flat surfaces from which each object is cut.

Note: If a file contains sheet bodies, this option must be selected for the file to be imported correctly.

Method A—Used to establish the Method A settings.

- **Import hidden objects**—Imports all hidden objects. If, after importing a file, you modify any visible objects that contain hidden sub-objects after import, those hidden objects are also modified.
- **Display hidden objects**—Displays all hidden objects in the viewport after importing the file.
- **Import sheet bodies**—Imports all construction geometry. Sheet bodies are flat surfaces from which each object is cut.

Note: If a file contains sheet bodies, this option must be selected for the file to be imported correctly.

- **Import wireframes**—Imports all wireframes if any exist.
- **Import Metadata**—Imports file metadata from original CAD file (stored inside RH file as 'CADMetadata' category).
- **Unit**—Used to select the unit type for which you want to view its custom unit (scene unit) measurement in meters. For example, 1 custom unit = 0.01 meters.
  - **File default**—Imports the file using the file's units.
  - **Millimeters**—Imports the file in millimeters (mm).
  - **Centimeters**—Imports the file in centimeters (cm).
  - **Meters**—Imports the file in meters (m).
  - **Inches**—Imports the file in inches (in).
  - **Feet**—Imports the file in feet (ft).
- **Ignore material opacity**—Disregards any material transparency that may have been set in the original file via an external application. That is, all the objects appear opaque. For example, a material opacity of 30% for an object is ignored, and the object is displayed with 100% opacity.
- **Auto-correct view orientation**—Attempts to correct the file's original view orientation to align with Deep Exploration's view orientation.
- **Import PMI** (on page 220)—Imports any Product Manufacturing Information (PMI) within the file. The PMI data objects can be accessed from within the 3D Objects list. Note that you must have the 'Show Markups (on page 257)' command on to view PMI data in the viewport.

Legacy—Used to establish the Legacy settings.

- **Maximum edge length** (on page 42)—Selects the maximum allowed length of each edge, as a percentage the scene bounding box diagonal. This helps to prevent long, narrow polygons being created. For example, if you enter 10%, the length of any edge will be less than 1/10 of diagonal length of object's bounding box.
- **Grid aspect ratio** (on page 42)—Determines the ratio (between 0 and 1) of the width to height for each 'surface square'. For example, if you enter 1, the tessellation process attempts to produce squares instead of rectangles. This is helpful in avoiding the creation of very long, narrow triangles which can cause undesirable lighting and shading artifacts.

Copyright © Right Hemisphere 2007. All Rights Reserved.

- **Create material for all faces**—Creates and assigns a new material to all the faces. The new materials have the same names as the faces (if face names exist). Otherwise, it uses the objects' names.
- **Merge sub-objects**—Combines all sub-objects into a single part.
- **Heal solid objects**—Welds the edges of all solid objects together.
- **Log file**—Creates an information log file in the same folder as the 3D file. The log includes system information, user-specified settings, a conversion summary, and the result of the import.

Geometry Transform (on page 41)—Used to transform (rotate, position, and scale) the scene along the X, Y, and Z axes.

- **Rotation**—Used to set the degrees of rotation around each axis from 0 to 360 degrees. The rotation values can be entered with up to 6 decimal places.
  - **X**—Rotates the scene along the X axis.
  - **Y**—Rotates the scene along the Y axis.
  - **Z**—Rotates the scene along the Z axis.
- **Position**—Used to set the position of the scene along the X, Y, and Z axes.
  - **X**—Positions the scene along the X axis.
  - **Y**—Positions the scene along the Y axis.
  - **Z**—Positions the scene along the Z axis.
- **Scale**—Used to scale the object along the X, Y, and Z axes.
  - **X**—Scales the scene along the X axis.
  - **Y**—Scales the scene along the Y axis.
  - **Z**—Scales the scene along the Z axis.

Copyright © Right Hemisphere 2007. All Rights Reserved.

CATIA5 Assembly and Part Import (.catpart, .catproduct)

You can import and view CATIA5 assembly and part (.catpart, .catproduct) files.

CATIA5 is the file format used in the CAD applications developed by Dassault Systems and is one of the most popular CAD applications.

The import options differ depending on the version of Deep Exploration you have installed:

- Certain options are available with the CAD Edition of Deep Exploration.
- Certain options are available with the Standard Edition of Deep Exploration and the CATIA5 Module.

Note that support for the CAD format versions (on page 560) also differs depending on the version of Deep Exploration you have installed.

CATIA5 Assembly and Part CAD Edition Import

You can import and view CATIA5 (.catpart, .catproduct) files using the import options delivered with the CAD Edition of Deep Exploration.

For further information on using files, please see Opening Files (on page 39), Importing Files (on page 40), and Saving Files (on page 55).

Support

- 2D vector data.
- Materials and object names.
- Meshes.
- Parts data.
- Tessellation control.

Limitations

- Animation.
- Assembly hierarchy.
- BOM support based on part names.
- Configurations.
- NURBS/Solids.
- Textures.
- UV coordinates.

Interface

Common—Used to establish the common settings including tessellation (arrangement and density of the polygons) settings. Note that if you enter 0 (zero) for any of the tessellation settings, they are not taken into effect during the tessellation process.

- **Surface deviation** (on page 42)—Determines the maximum distance allowed between original analytical surface and its tessellated representation. Triangle edges do not deviate from edges of the face by more than this amount. The units are expressed as unit size based on those used by the model. A smaller surface deviation produces more triangles for smoother models.

Copyright © Right Hemisphere 2007. All Rights Reserved.

- **Normal deviation** (on page 42)—Determines the maximum angular deviation (in degrees) allowed between a analytical surface and its triangulation. Pairs of triangles do not incorporate a dihedral angle greater than this amount. For example, this setting dictates the minimum number of facets around a smaller circle or cylinder regardless of the Surface Deviation setting. This parameter gives you added control over faces with very small radii. Lower values result in finer tessellations, while higher values give coarser tessellations.
- **Import hidden objects**—Imports all hidden objects. If, after importing a file, you modify any visible objects that contain hidden sub-objects after import, those hidden objects are also modified.
- **Display hidden objects**—Displays all hidden objects in the viewport after importing the file.
- **Import sheet bodies**—Imports all construction geometry. Sheet bodies are flat surfaces from which each object is cut.

  Note: If a file contains sheet bodies, this option must be selected for the file to be imported correctly.

- **Import wireframes**—Imports all wireframes if any exist.
- **Import Metadata**—Imports file metadata from original CAD file (stored inside RH file as 'CADMetadata' category).
- **Unit**—Used to select the unit type for which you want to view its custom unit (scene unit) measurement in meters. For example, 1 custom unit = 0.01 meters.
  - **File default**—Imports the file using the file's units.
  - **Millimeters**—Imports the file in millimeters (mm).
  - **Centimeters**—Imports the file in centimeters (cm).
  - **Meters**—Imports the file in meters (m).
  - **Inches**—Imports the file in inches (in).
  - **Feet**—Imports the file in feet (ft).
- **Ignore material opacity**—Disregards any material transparency that may have been set in the original file via an external application. That is, all the objects appear opaque. For example, a material opacity of 30% for an object is ignored, and the object is displayed with 100% opacity.
- **Auto-correct view orientation**—Attempts to correct the file's original view orientation to align with Deep Exploration's view orientation.
- **Import PMI** (on page 220)—Imports any Product Manufacturing Information (PMI) within the file. The PMI data objects can be accessed from within the 3D Objects list. Note that you must have the 'Show Markups (on page 257)' command on to view PMI data in the viewport.

Geometry Transform (on page 41)—Used to transform (rotate, position, and scale) the scene along the X, Y, and Z axes.

- **Rotation**—Used to set the degrees of rotation around each axis from 0 to 360 degrees. The rotation values can be entered with up to 6 decimal places.
  - **X**—Rotates the scene along the X axis.
  - **Y**—Rotates the scene along the Y axis.
  - **Z**—Rotates the scene along the Z axis.
- **Position**—Used to set the position of the scene along the X, Y, and Z axes.
  - **X**—Positions the scene along the X axis.
  - **Y**—Positions the scene along the Y axis.
  - **Z**—Positions the scene along the Z axis.
- **Scale**—Used to scale the object along the X, Y, and Z axes.

Copyright © Right Hemisphere 2007. All Rights Reserved.

- **X**—Scales the scene along the X axis.
- **Y**—Scales the scene along the Y axis.
- **Z**—Scales the scene along the Z axis.

CATIA5 Assembly and Part Module Import

You can import and view CATIA5 (.catpart, .catproduct) files using the import options delivered with the Standard Edition of Deep Exploration and the CATIA5 Module.

For further information on using files, please see Opening Files (on page 39), Importing Files (on page 40), and Saving Files (on page 55).

Support

- 2D vector data as wireframes are supported when importing using Method A.
- Materials and object names.
- Meshes.
- Parts data.
- Tessellation control.
- UV coordinates are supported when importing using the Legacy method.

Limitations

- Animation.
- Assembly hierarchy.
- BOM support based on part names.
- Configurations.
- NURBS/Solids data.
- Textures.
- UV coordinates are not supported when importing using Method A.

Interface

Common—Used to establish the common settings including tessellation (arrangement and density of the polygons) settings. Note that if you enter 0 (zero) for any of the tessellation settings, they are not taken into effect during the tessellation process.

- **Surface deviation** (on page 42)—Determines the maximum distance allowed between original analytical surface and its tessellated representation. Triangle edges do not deviate from edges of the face by more than this amount. The units are expressed as unit size based on those used by the model. A smaller surface deviation produces more triangles for smoother models.
- **Normal deviation** (on page 42)—Determines the maximum angular deviation (in degrees) allowed between a analytical surface and its triangulation. Pairs of triangles do not incorporate a dihedral angle greater than this amount. For example, this setting dictates the minimum number of facets around a smaller circle or cylinder regardless of the Surface Deviation setting. This parameter gives you added control over faces with very small radii. Lower values result in finer tessellations, while higher values give coarser tessellations.
- **Import sheet bodies**—Imports all construction geometry. Sheet bodies are flat surfaces from which each object is cut.

Note: If a file contains sheet bodies, this option must be selected for the file to be imported correctly.

Copyright © Right Hemisphere 2007. All Rights Reserved.

Method A—Used to establish the Method A settings.

- **Import hidden objects**—Imports all hidden objects. If, after importing a file, you modify any visible objects that contain hidden sub-objects after import, those hidden objects are also modified.
- **Display hidden objects**—Displays all hidden objects in the viewport after importing the file.
- **Import sheet bodies**—Imports all construction geometry. Sheet bodies are flat surfaces from which each object is cut.

  Note: If a file contains sheet bodies, this option must be selected for the file to be imported correctly.

- **Import wireframes**—Imports all wireframes if any exist.
- **Import Metadata**—Imports file metadata from original CAD file (stored inside RH file as 'CADMetadata' category).
- **Unit**—Used to select the unit type for which you want to view its custom unit (scene unit) measurement in meters. For example, 1 custom unit = 0.01 meters.
  - **File default**—Imports the file using the file's units.
  - **Millimeters**—Imports the file in millimeters (mm).
  - **Centimeters**—Imports the file in centimeters (cm).
  - **Meters**—Imports the file in meters (m).
  - **Inches**—Imports the file in inches (in).
  - **Feet**—Imports the file in feet (ft).
- **Ignore material opacity**—Disregards any material transparency that may have been set in the original file via an external application. That is, all the objects appear opaque. For example, a material opacity of 30% for an object is ignored, and the object is displayed with 100% opacity.
- **Auto-correct view orientation**—Attempts to correct the file's original view orientation to align with Deep Exploration's view orientation.
- **Import PMI** (on page 220)—Imports any Product Manufacturing Information (PMI) within the file. The PMI data objects can be accessed from within the 3D Objects list. Note that you must have the 'Show Markups (on page 257)' command on to view PMI data in the viewport.

Legacy—Used to establish the Legacy settings.

- **Maximum edge length** (on page 42)—Selects the maximum allowed length of each edge, as a percentage the scene bounding box diagonal. This helps to prevent long, narrow polygons being created. For example, if you enter 10%, the length of any edge will be less than 1/10 of diagonal length of object's bounding box.
- **Grid aspect ratio** (on page 42)—Determines the ratio (between 0 and 1) of the width to height for each 'surface square'. For example, if you enter 1, the tessellation process attempts to produce squares instead of rectangles. This is helpful in avoiding the creation of very long, narrow triangles which can cause undesirable lighting and shading artifacts.
- **Create material for all faces**—Creates and assigns a new material to all the faces. The new materials have the same names as the faces (if face names exist). Otherwise, it uses the objects' names.
- **Merge sub-objects**—Combines all sub-objects into a single part.
- **Heal solid objects**—Welds the edges of all solid objects together.
- **Log file**—Creates an information log file in the same folder as the 3D file. The log includes system information, user-specified settings, a conversion summary, and the result of the import.

Geometry Transform (on page 41)—Used to transform (rotate, position, and scale) the scene along the X, Y, and Z axes.

Copyright © Right Hemisphere 2007. All Rights Reserved.

- **Rotation**—Used to set the degrees of rotation around each axis from 0 to 360 degrees. The rotation values can be entered with up to 6 decimal places.
  - **X**—Rotates the scene along the X axis.
  - **Y**—Rotates the scene along the Y axis.
  - **Z**—Rotates the scene along the Z axis.
- **Position**—Used to set the position of the scene along the X, Y, and Z axes.
  - **X**—Positions the scene along the X axis.
  - **Y**—Positions the scene along the Y axis.
  - **Z**—Positions the scene along the Z axis.
- **Scale**—Used to scale the object along the X, Y, and Z axes.
  - **X**—Scales the scene along the X axis.
  - **Y**—Scales the scene along the Y axis.
  - **Z**—Scales the scene along the Z axis.

CATIA5 Assembly and Part Module Import Method B

You can import and view CATIA5 (.catpart, .catproduct) files using the import options delivered with the Standard Edition of Deep Exploration and the CATIA5 Module.

For further information on using files, please see Opening Files (on page 39), Importing Files (on page 40), and Saving Files (on page 55).

Support

- Captures (user defined model views in Catia v5 software)
- Geoset Metadata
- 2D vector data as wireframes are supported when importing using Method A.
- Materials and object names.
- Meshes.
- Parts data.
- Tessellation control.
- UV coordinates are supported when importing using the Legacy method.

Limitations

- Animation.
- Assembly hierarchy.
- BOM support based on part names.
- Configurations.
- NURBS/Solids data.
- Textures.
- UV coordinates are not supported when importing using Method A.

Copyright © Right Hemisphere 2007. All Rights Reserved.

Interface

Common—Used to establish the common settings including tessellation (arrangement and density of the polygons) settings. Note that if you enter 0 (zero) for any of the tessellation settings, they are not taken into effect during the tessellation process.

- **Surface deviation** (on page 42)—Determines the maximum distance allowed between original analytical surface and its tessellated representation. Triangle edges do not deviate from edges of the face by more than this amount. The units are expressed as unit size based on those used by the model. A smaller surface deviation produces more triangles for smoother models.
- **Normal deviation** (on page 42)—Determines the maximum angular deviation (in degrees) allowed between a analytical surface and its triangulation. Pairs of triangles do not incorporate a dihedral angle greater than this amount. For example, this setting dictates the minimum number of facets around a smaller circle or cylinder regardless of the Surface Deviation setting. This parameter gives you added control over faces with very small radii. Lower values result in finer tessellations, while higher values give coarser tessellations.
- **Import sheet bodies**—Imports all construction geometry. Sheet bodies are flat surfaces from which each object is cut.

  Note: If a file contains sheet bodies, this option must be selected for the file to be imported correctly.

Method A—Used to establish the Method A settings.

- **Import hidden objects**—Imports all hidden objects. If, after importing a file, you modify any visible objects that contain hidden sub-objects after import, those hidden objects are also modified.
- **Display hidden objects**—Displays all hidden objects in the viewport after importing the file.
- **Import sheet bodies**—Imports all construction geometry. Sheet bodies are flat surfaces from which each object is cut.

  Note: If a file contains sheet bodies, this option must be selected for the file to be imported correctly.

- **Import wireframes**—Imports all wireframes if any exist.
- **Import Metadata**—Imports file metadata from original CAD file (stored inside RH file as 'CADMetadata' category).
- **Unit**—Used to select the unit type for which you want to view its custom unit (scene unit) measurement in meters. For example, 1 custom unit = 0.01 meters.
  - **File default**—Imports the file using the file's units.
  - **Millimeters**—Imports the file in millimeters (mm).
  - **Centimeters**—Imports the file in centimeters (cm).
  - **Meters**—Imports the file in meters (m).
  - **Inches**—Imports the file in inches (in).
  - **Feet**—Imports the file in feet (ft).
- **Ignore material opacity**—Disregards any material transparency that may have been set in the original file via an external application. That is, all the objects appear opaque. For example, a material opacity of 30% for an object is ignored, and the object is displayed with 100% opacity.
- **Auto-correct view orientation**—Attempts to correct the file's original view orientation to align with Deep Exploration's view orientation.
- **Import Construction Geometry**—Imports construction geometry including coordinate axes, infinite/datum planes and points.

Copyright © Right Hemisphere 2007. All Rights Reserved.

- **Import PMI** (on page 220)—Imports any Product Manufacturing Information (PMI) within the file. The PMI data objects can be accessed from within the 3D Objects list. Note that you must have the 'Show Markups (on page 257)' command on to view PMI data in the viewport.

Legacy—Used to establish the Legacy settings.

- **Maximum edge length** (on page 42)—Selects the maximum allowed length of each edge, as a percentage the scene bounding box diagonal. This helps to prevent long, narrow polygons being created. For example, if you enter 10%, the length of any edge will be less than 1/10 of diagonal length of object's bounding box.
- **Grid aspect ratio** (on page 42)—Determines the ratio (between 0 and 1) of the width to height for each 'surface square'. For example, if you enter 1, the tessellation process attempts to produce squares instead of rectangles. This is helpful in avoiding the creation of very long, narrow triangles which can cause undesirable lighting and shading artifacts.
- **Create material for all faces**—Creates and assigns a new material to all the faces. The new materials have the same names as the faces (if face names exist). Otherwise, it uses the objects' names.
- **Merge sub-objects**—Combines all sub-objects into a single part.
- **Heal solid objects**—Welds the edges of all solid objects together.
- **Log file**—Creates an information log file in the same folder as the 3D file. The log includes system information, user-specified settings, a conversion summary, and the result of the import.

Geometry Transform (on page 41)—Used to transform (rotate, position, and scale) the scene along the X, Y, and Z axes.

- **Rotation**—Used to set the degrees of rotation around each axis from 0 to 360 degrees. The rotation values can be entered with up to 6 decimal places.
  - **X**—Rotates the scene along the X axis.
  - **Y**—Rotates the scene along the Y axis.
  - **Z**—Rotates the scene along the Z axis.
- **Position**—Used to set the position of the scene along the X, Y, and Z axes.
  - **X**—Positions the scene along the X axis.
  - **Y**—Positions the scene along the Y axis.
  - **Z**—Positions the scene along the Z axis.
- **Scale**—Used to scale the object along the X, Y, and Z axes.
  - **X**—Scales the scene along the X axis.
  - **Y**—Scales the scene along the Y axis.
  - **Z**—Scales the scene along the Z axis.

Copyright © Right Hemisphere 2007. All Rights Reserved.

Computer Graphics Metafile Export (.cgm)

You can save files to the Computer Graphics Export (.cgm) format.

The .cgm file format is one of the CALS standard formats for representing 2D technical illustrations and is an object-oriented graphic format. It was developed by experts working under the auspices of ISO and ANSI, and was designed specifically as a common format for the platform-independent interchange of raster (bitmap) and vector data. It is used primarily to store vector graphics information.

CGM files typically contain either vector or raster data, but rarely both. Used in its primary role as a vector format, it offers the advantage of small file size and resolution independence, while not being tied to a specific software package or hardware platform. CGM was adapted by the Department of Defense as one of the CALS initiative standards.

Note: CGM = CALS profile specified in MIL-D-28003A.

For further information on using files, please see Opening Files (on page 39), Importing Files (on page 40), and Saving Files (on page 55).

Support

- ASCII and binary versions.

Limitations

- Bitmaps.

Interface

Version—Used to establish with which version to save the file.

- **1 (most compatible)**—Saves the files in version 1 of the .cgm format. This version is the most compatible.
- **3 (best curves)**—Saves the files in version 3 of the .cgm format. This version produces the best curves.

File mode—Used to establish in which format to save the file.

- **Binary**—Saves the file in binary format.
- **Text**—Files the file in text format. Note that this file is larger than the Binary file but you can edit the content in a text editor.

Numeric Precision—Used to establish with what precision to save numbers in the file.

- **Integer**—Saves the numbers as integers.
- **Float**—Saves the numbers as floats.

Encode raster images with RLE—Raster images can be written in compressed or uncompressed form. 'The standard way' is uncompressed, RLE (Run Length Encoding) is compressed. This option switches RLE ON or OFF.

Copyright © Right Hemisphere 2007. All Rights Reserved.

Computer Graphics Metafile Import (.cgm)

You can import and view Computer Graphics Metafile (.cgm) files.

The .cgm file format is one of the CALS standard formats for representing 2D technical illustrations and is an object-oriented graphic format. It was developed by experts working under the auspices of ISO and ANSI, and was designed specifically as a common format for the platform-independent interchange of raster (bitmap) and vector data. It is used primarily to store vector graphics information.

CGM files typically contain either vector or raster data, but rarely both. Used in its primary role as a vector format, it offers the advantage of small file size and resolution independence, while not being tied to a specific software package or hardware platform. CGM was adapted by the Department of Defense as one of the CALS initiative standards.

Note: CGM = CALS profile specified in MIL-D-28003A.

For further information on using files, please see Opening Files (on page 39), Importing Files (on page 40), and Saving Files (on page 55).

Support

- ASCII and binary versions.

Limitation

- Bitmaps.

Interface

Common—Used to establish the common settings.

- **Fill**—Used to select the way in which polygons are rendered.
  - **No**—Renders polygons as lines.
  - **Yes**—Renders polygons as solid triangles.

Copyright © Right Hemisphere 2007. All Rights Reserved.

Granite File Import (.g)

You can import and view Granite (.g) files.

For further information on using files, please see Opening Files (on page 39), Importing Files (on page 40), and Saving Files (on page 55).

Support

- 2D vector data.
- Assembly hierarchy.
- Meshes.
- Parts data.
- Material and object names.
- Tessellation control.
- UV coordinates are supported when importing using Method A.

Limitations

- Animation.
- BOM support based on part names.
- Configurations.
- Solids/NURBS.
- Textures.

Interface

Import Method—Used to establish the way in which to import the file.

- **Method**—The method in which the file is imported. Each method utilizes differing import options to import the file.
  - **Method A**—Imports the file using Method A.
  - **Legacy**—Imports the file using the Legacy method.

Method A—Used to establish the Method A settings.

- **Surface deviation** (on page 42)—Determines the maximum distance allowed between original analytical surface and its tessellated representation. Triangle edges do not deviate from edges of the face by more than this amount. The units are expressed as unit size based on those used by the model. A smaller surface deviation produces more triangles for smoother models.
- **Normal deviation** (on page 42)—Determines the maximum angular deviation (in degrees) allowed between a analytical surface and its triangulation. Pairs of triangles do not incorporate a dihedral angle greater than this amount. For example, this setting dictates the minimum number of facets around a smaller circle or cylinder regardless of the Surface Deviation setting. This parameter gives you added control over faces with very small radii. Lower values result in finer tessellations, while higher values give coarser tessellations.
- **Import hidden objects**—Imports all hidden objects. If, after importing a file, you modify any visible objects that contain hidden sub-objects after import, those hidden objects are also modified.
- **Display hidden objects**—Displays all hidden objects in the viewport after importing the file.

Copyright © Right Hemisphere 2007. All Rights Reserved.

- **Import sheet bodies**—Imports all construction geometry. Sheet bodies are flat surfaces from which each object is cut.

  Note: If a file contains sheet bodies, this option must be selected for the file to be imported correctly.

- **Import wireframes**—Imports all wireframes if any exist.
- **Unit**—Used to select the unit type for which you want to view its custom unit (scene unit) measurement in meters. For example, 1 custom unit = 0.01 meters.
  - **File default**—Imports the file using the file's units.
  - **Millimeters**—Imports the file in millimeters (mm).
  - **Centimeters**—Imports the file in centimeters (cm).
  - **Meters**—Imports the file in meters (m).
  - **Inches**—Imports the file in inches (in).
  - **Feet**—Imports the file in feet (ft).
- **Ignore material opacity**—Disregards any material transparency that may have been set in the original file via an external application. That is, all the objects appear opaque. For example, a material opacity of 30% for an object is ignored, and the object is displayed with 100% opacity.
- **Auto-correct view orientation**—Attempts to correct the file's original view orientation to align with Deep Exploration's view orientation.
- **Import PMI** (on page 220)—Imports any Product Manufacturing Information (PMI) within the file. The PMI data objects can be accessed from within the 3D Objects list. Note that you must have the 'Show Markups (on page 257)' command on to view PMI data in the viewport.

Legacy—Used to establish the Legacy settings.

- **Default Tessellation** (on page 43)—Used to import the file using the default tessellation settings (arrangement and density of the polygons).

  Note: If you enter 0 (zero) for any of the tessellation settings, they are not taken into effect during the tessellation process.

  - **Tessellation** (on page 42)—Used to import the file using the level of tessellation.
    - **Very high**—Displays a very high resolution using the values directly from the file. You are able to set custom values to give you a higher tessellation if a file has a very high polygon count. Note that using this option reduces processing speed.
    - **High**—Displays a high resolution with a high number of polygons. That is, the planar tolerance is set to the tessellation tolerance.
    - **Medium**—Displays a medium resolution with a medium number of polygons. That is, the planer tolerance is set to the tessellation tolerance and both are multiplied by 10.
    - **Low**—Displays a low resolution with a low number of polygons. That is, the planer tolerance is set to the tessellation tolerance and both are multiplied by 100. This option increases processing speed.
- **Custom Tessellation**—Used to customize the tessellation settings for all objects within the model. These settings are used when you triangulate (mesh) the faces/bodies of the model.

  Note: If you enter 0 (zero) for any of the tessellation settings, they are not taken into effect during the tessellation process.

  - **Angle tolerance** (on page 46)—The maximum angular deviation allowed between a face and its triangulation. Pairs of triangles do not incorporate a dihedral angle greater than this amount. This parameter gives a user added control over faces with very small radii. Lower values result in finer tessellations, while higher values give coarser tessellations.

Copyright © Right Hemisphere 2007. All Rights Reserved.

  - **Planar tolerance** (on page 46)—The maximum distance allowed between a face and its triangulation for 3D solid objects. Triangle interiors do not deviate from the face interior by more than this amount.
  - **Tessellation tolerance** (on page 46)—The maximum distance allowed between an edge/curve and its tessellation. Triangle edges do not deviate from edges of the face by more than this amount, or by more than the maximum distance between the edge and the side of the facets along the edge when used in face triangulation.

    Tip: If you only want tessellation of edges/curves, enter values for the tessellation tolerance and angular tolerance.

    Note: Both planar and tessellation tolerance are considered in the units of the model being meshed. Therefore, they should be set to a similar value according to the model size to noticeably reduce the number of triangles generated. Model size/100 is a good starting point depending whether you want a fine or coarse mesh.

- **Display**—Used to display 2D vectors and 3D solids, or 3D solids only.
  - **2D vector and 3D solids**—Displays 2D vectors and 3D solids. Only the tessellation of 2D vectors is affected.
  - **3D solids**—Displays 3D solid objects only. As planar tolerance is for face triangulation of 3D solid objects only, this selection ensures planar tolerance affects the tessellation.
- **Tessellation** (on page 42)—Used to select the tessellation with which to import the file.
  - **Default**—Imports the file using the default tessellation settings.
  - **Custom**—Imports the file using the customized tessellation settings.

Geometry Transform (on page 41)—Used to transform (rotate, position, and scale) the scene along the X, Y, and Z axes.

- **Rotation**—Used to set the degrees of rotation around each axis from 0 to 360 degrees. The rotation values can be entered with up to 6 decimal places.
  - **X**—Rotates the scene along the X axis.
  - **Y**—Rotates the scene along the Y axis.
  - **Z**—Rotates the scene along the Z axis.
- **Position**—Used to set the position of the scene along the X, Y, and Z axes.
  - **X**—Positions the scene along the X axis.
  - **Y**—Positions the scene along the Y axis.
  - **Z**—Positions the scene along the Z axis.
- **Scale**—Used to scale the object along the X, Y, and Z axes.
  - **X**—Scales the scene along the X axis.
  - **Y**—Scales the scene along the Y axis.
  - **Z**—Scales the scene along the Z axis.

Copyright © Right Hemisphere 2007. All Rights Reserved.

Hewlett-Packard Graphics Library Import (.hpgl, .plt,)

You can view Hewlett-Packard Graphics Library (.hpgl and .plt) files.

The .plt and .hpgl file formats (HPGL) are the standard language for printing line drawings. PLT and HPGL files are supported by many CAD, charting, and word processing applications.

For further information on using files, please see Opening Files (on page 39), Importing Files (on page 40), and Saving Files (on page 55).

Copyright © Right Hemisphere 2007. All Rights Reserved.

IGES Format Import (.iges, .igs)

You can import and view IGES (Initial Graphics Exchange Specification) Format (.iges, .igs) files.

The .iges and .igs file formats are used to share high-quality CAD data. These formats can represent many different types of data, ranging from lines and arcs to complex geometric solids, such as cylinders and cones; these are commonly known as 'constructive solid geometry'.

The import options differ depending on the version of Deep Exploration you have installed:

- Certain options are available with the CAD Edition of Deep Exploration.
- Certain options are available with the Standard Edition of Deep Exploration and the CoreCAD Module or Pro/E Module.

Note that support for the CAD format versions (on page 560) also differs depending on the version of Deep Exploration you have installed.

Import Rules

The following rules apply when importing Pro/E files:

- When a file is first opened with the Pro/E Module, a medium resolution is used by default for fast file loading, and a dialog displays these resolution settings.

  Note: You can retrieve color information.

- The latest version of any part file within the folder is always opened. For example, sprng.prt.3 is opened if the folder contains spring.prt.1, spring.prt.2 and spring.prt.3.
- Parts and sub-assemblies are added to the external files list.
- Sub-assembly hierarchy is added for all part files, if any.
- Pro/E searches through folders for part and assembly files and for corresponding accelerator files (on page 623):

1. The current directory of the file.
2. In the search paths specified in the CAD Modules tab (on page 285).

If a part, assembly or accelerator file is not found, a message is displayed next to the object in the Scene Components panel (on page 329) advising you of this.

IGES Format CAD Edition Import

You can import and view IGES (Initial Graphics Exchange Specification) Format (.iges, .igs) files using the import options delivered with the CAD Edition of Deep Exploration.

For further information on using files, please see Opening Files (on page 39), Importing Files (on page 40), and Saving Files (on page 55).

Support

- All IGES surface and 3D curves.
- 2D vector data (text and dimensions).
- Assembly hierarchy.
- Meshes.
- Parts data.
- Material and object names.
- Tessellation control.

Copyright © Right Hemisphere 2007. All Rights Reserved.

Limitations

- Animation.
- BOM support based on part names.
- Configurations.
- Solids/NURBS.
- Textures.
- UV coordinates.

Interface

Common—Used to establish the common settings including tessellation (arrangement and density of the polygons) settings. Note that if you enter 0 (zero) for any of the tessellation settings, they are not taken into effect during the tessellation process.

- **Surface deviation** (on page 42)—Determines the maximum distance allowed between original analytical surface and its tessellated representation. Triangle edges do not deviate from edges of the face by more than this amount. The units are expressed as unit size based on those used by the model. A smaller surface deviation produces more triangles for smoother models.
- **Normal deviation** (on page 42)—Determines the maximum angular deviation (in degrees) allowed between a analytical surface and its triangulation. Pairs of triangles do not incorporate a dihedral angle greater than this amount. For example, this setting dictates the minimum number of facets around a smaller circle or cylinder regardless of the Surface Deviation setting. This parameter gives you added control over faces with very small radii. Lower values result in finer tessellations, while higher values give coarser tessellations.
- **Import hidden objects**—Imports all hidden objects. If, after importing a file, you modify any visible objects that contain hidden sub-objects after import, those hidden objects are also modified.
- **Display hidden objects**—Displays all hidden objects in the viewport after importing the file.
- **Import sheet bodies**—Imports all construction geometry. Sheet bodies are flat surfaces from which each object is cut.

  Note: If a file contains sheet bodies, this option must be selected for the file to be imported correctly.

- **Import wireframes**—Imports all wireframes if any exist.
- **Unit**—Used to select the unit type for which you want to view its custom unit (scene unit) measurement in meters. For example, 1 custom unit = 0.01 meters.
  - **File default**—Imports the file using the file's units.
  - **Millimeters**—Imports the file in millimeters (mm).
  - **Centimeters**—Imports the file in centimeters (cm).
  - **Meters**—Imports the file in meters (m).
  - **Inches**—Imports the file in inches (in).
  - **Feet**—Imports the file in feet (ft).
- **Ignore material opacity**—Disregards any material transparency that may have been set in the original file via an external application. That is, all the objects appear opaque. For example, a material opacity of 30% for an object is ignored, and the object is displayed with 100% opacity.
- **Auto-correct view orientation**—Attempts to correct the file's original view orientation to align with Deep Exploration's view orientation.

Copyright © Right Hemisphere 2007. All Rights Reserved.

Geometry Transform (on page 41)—Used to transform (rotate, position, and scale) the scene along the X, Y, and Z axes.

- **Rotation**—Used to set the degrees of rotation around each axis from 0 to 360 degrees. The rotation values can be entered with up to 6 decimal places.
  - **X**—Rotates the scene along the X axis.
  - **Y**—Rotates the scene along the Y axis.
  - **Z**—Rotates the scene along the Z axis.
- **Position**—Used to set the position of the scene along the X, Y, and Z axes.
  - **X**—Positions the scene along the X axis.
  - **Y**—Positions the scene along the Y axis.
  - **Z**—Positions the scene along the Z axis.
- **Scale**—Used to scale the object along the X, Y, and Z axes.
  - **X**—Scales the scene along the X axis.
  - **Y**—Scales the scene along the Y axis.
  - **Z**—Scales the scene along the Z axis.

IGES Format Module Import

You can import and view IGES (Initial Graphics Exchange Specification) Format (.iges, .igs) using the import options delivered with the Standard Edition of Deep Exploration and the CoreCAD or Pro/E Module.

For further information on using files, please see Opening Files (on page 39), Importing Files (on page 40), and Saving Files (on page 55).

Support

- All IGES surface and 3D curves.
- 2D vector data (text and dimensions) when importing with the CoreCAD Module.
- 2D vector data when importing with the Pro/E Module.
- Assembly hierarchy.
- Meshes.
- Parts data.
- Material and object names.
- Tessellation control is supported when importing using Method A.
- UV coordinates are supported when importing with the Pro/E Module using the Legacy method.

Limitations

- Animation.
- BOM support based on part names.
- Configurations.
- Solids/NURBS.
- Textures.

Copyright © Right Hemisphere 2007. All Rights Reserved.

Interface

Import Method—Used to establish the way in which to import the file.

- **Method**—The method in which the file is imported. Each method utilizes differing import options to import the file.
  - **Method A**—Imports the file using Method A.
  - **Legacy**—Imports the file using the Legacy method.

Method A—Used to establish the Method A settings.

- **Surface deviation** (on page 42)—Determines the maximum distance allowed between original analytical surface and its tessellated representation. Triangle edges do not deviate from edges of the face by more than this amount. The units are expressed as unit size based on those used by the model. A smaller surface deviation produces more triangles for smoother models.
- **Normal deviation** (on page 42)—Determines the maximum angular deviation (in degrees) allowed between a analytical surface and its triangulation. Pairs of triangles do not incorporate a dihedral angle greater than this amount. For example, this setting dictates the minimum number of facets around a smaller circle or cylinder regardless of the Surface Deviation setting. This parameter gives you added control over faces with very small radii. Lower values result in finer tessellations, while higher values give coarser tessellations.
- **Import hidden objects**—Imports all hidden objects. If, after importing a file, you modify any visible objects that contain hidden sub-objects after import, those hidden objects are also modified.
- **Display hidden objects**—Displays all hidden objects in the viewport after importing the file.
- **Import sheet bodies**—Imports all construction geometry. Sheet bodies are flat surfaces from which each object is cut.

  Note: If a file contains sheet bodies, this option must be selected for the file to be imported correctly.

- **Import wireframes**—Imports all wireframes if any exist.
- **Unit**—Used to select the unit type for which you want to view its custom unit (scene unit) measurement in meters. For example, 1 custom unit = 0.01 meters.
  - **File default**—Imports the file using the file's units.
  - **Millimeters**—Imports the file in millimeters (mm).
  - **Centimeters**—Imports the file in centimeters (cm).
  - **Meters**—Imports the file in meters (m).
  - **Inches**—Imports the file in inches (in).
  - **Feet**—Imports the file in feet (ft).
- **Ignore material opacity**—Disregards any material transparency that may have been set in the original file via an external application. That is, all the objects appear opaque. For example, a material opacity of 30% for an object is ignored, and the object is displayed with 100% opacity.
- **Auto-correct view orientation**—Attempts to correct the file's original view orientation to align with Deep Exploration's view orientation.
- **Import PMI** (on page 220)—Imports any Product Manufacturing Information (PMI) within the file. The PMI data objects can be accessed from within the 3D Objects list. Note that you must have the 'Show Markups (on page 257)' command on to view PMI data in the viewport.

Legacy—Used to establish the Legacy settings.

- **Default Tessellation** (on page 43)—Used to import the file using the default tessellation settings (arrangement and density of the polygons).

Copyright © Right Hemisphere 2007. All Rights Reserved.

Note: If you enter 0 (zero) for any of the tessellation settings, they are not taken into effect during the tessellation process.

- **Tessellation** (on page 42)—Used to import the file using the level of tessellation.
  - **Very high**—Displays a very high resolution using the values directly from the file. You are able to set custom values to give you a higher tessellation if a file has a very high polygon count. Note that using this option reduces processing speed.
  - **High**—Displays a high resolution with a high number of polygons. That is, the planar tolerance is set to the tessellation tolerance.
  - **Medium**—Displays a medium resolution with a medium number of polygons. That is, the planar tolerance is set to the tessellation tolerance and both are multiplied by 10.
  - **Low**—Displays a low resolution with a low number of polygons. That is, the planar tolerance is set to the tessellation tolerance and both are multiplied by 100. This option increases processing speed.

- **Custom Tessellation**—Used to customize the tessellation settings for all objects within the model. These settings are used when you triangulate (mesh) the faces/bodies of the model.

Note: If you enter 0 (zero) for any of the tessellation settings, they are not taken into effect during the tessellation process.

- **Angle tolerance** (on page 46)—The maximum angular deviation allowed between a face and its triangulation. Pairs of triangles do not incorporate a dihedral angle greater than this amount. This parameter gives a user added control over faces with very small radii. Lower values result in finer tessellations, while higher values give coarser tessellations.
- **Planar tolerance** (on page 46)—The maximum distance allowed between a face and its triangulation for 3D solid objects. Triangle interiors do not deviate from the face interior by more than this amount.
- **Tessellation tolerance** (on page 46)—The maximum distance allowed between an edge/curve and its tessellation. Triangle edges do not deviate from edges of the face by more than this amount, or by more than the maximum distance between the edge and the side of the facets along the edge when used in face triangulation.

Tip: If you only want tessellation of edges/curves, enter values for the tessellation tolerance and angular tolerance.

Note: Both planar and tessellation tolerance are considered in the units of the model being meshed. Therefore, they should be set to a similar value according to the model size to noticeably reduce the number of triangles generated. Model size/100 is a good starting point depending whether you want a fine or coarse mesh.

- **Display**—Used to display 2D vectors and 3D solids, or 3D solids only.
  - **2D vector and 3D solids**—Displays 2D vectors and 3D solids. Only the tessellation of 2D vectors is affected.
  - **3D solids**—Displays 3D solid objects only. As planar tolerance is for face triangulation of 3D solid objects only, this selection ensures planar tolerance affects the tessellation.
- **Tessellation** (on page 42)—Used to select the tessellation with which to import the file.
  - **Default**—Imports the file using the default tessellation settings.
  - **Custom**—Imports the file using the customized tessellation settings.

Geometry Transform (on page 41)—Used to transform (rotate, position, and scale) the scene along the X, Y, and Z axes.

- **Rotation**—Used to set the degrees of rotation around each axis from 0 to 360 degrees. The rotation values can be entered with up to 6 decimal places.
  - **X**—Rotates the scene along the X axis.

Copyright © Right Hemisphere 2007. All Rights Reserved.

  - **Y**—Rotates the scene along the Y axis.
  - **Z**—Rotates the scene along the Z axis.
- **Position**—Used to set the position of the scene along the X, Y, and Z axes.
  - **X**—Positions the scene along the X axis.
  - **Y**—Positions the scene along the Y axis.
  - **Z**—Positions the scene along the Z axis.
- **Scale**—Used to scale the object along the X, Y, and Z axes.
  - **X**—Scales the scene along the X axis.
  - **Y**—Scales the scene along the Y axis.
  - **Z**—Scales the scene along the Z axis.

Copyright © Right Hemisphere 2007. All Rights Reserved.

JT File Export (.jt)

You can save files to the JT File (.jt) format using the export options delivered with the JT/PMI Module.

JT files represent an extremely robust and flexible data format, capable of storing:

- Directly renderable geometry.
- Analytical geometry.
- Geometric attributes.
- User metadata.
- Hierarchical CAD product structure.
- CAD Product Manufacturing Information (PMI) data including Geometric Dimensioning and Tolerance (GD&T) data.

Note: GD&T is also known as Feature Dimensioning and Tolerance (FD&T).

For further information on using files, and for details on any additional interface functionality for this format, please see Opening Files (on page 39), Importing Files (on page 40), Geometry Transform and Saving Files (on page 55).

Interface

Common—Used to establish the common settings.

- **Type**—Determines the way in which the file hierarchy objects are saved.
  - **Monolithic**—Saves one large file that contains the entire object hierarchy.
  - **Per part**—Saves the scene as a single file, and saves each object as an individual file located within a folder. The folder has the same name as the scene file. Each object file has the same name as the object, and is referenced by the scene file. This allows objects to be modified without affecting any other objects in the scene.

Compression—Reduces the model's file size while maintaining the quality. Compression helps to reduce the amount of storage and transmission bandwidth required for 3D models. The compression versions are related to the version in which the original file was written. Additionally, the compression versions are backwards compatible.

- **Compression type—**Used to select the type of compression to apply when saving the file.
  - **No compression**—Compresses the file with no compression. That is, version 6.4.
  - **Version 7.0**—Compresses the file into version 7.0 of the .jt format. The file contents are compressed using standard dictionary compression techniques. This compression is lossless.
  - **Version 8.0**—Compresses the file into version 8.0 of the .jt format. Compressing the renderable geometry contents is either lossless or lossy, and all other file content compression is lossless. This compression creates potentially the smallest .jt file.
  - **Version 8.1**—Compresses the file into version 8.1 of the .jt format. Compressing the renderable geometry contents is either lossless or lossy, and all other file content compression is lossless. This compression creates potentially the smallest .jt file.
  - **Automatic**—Compresses the file into the most compatible format.

Level of Detail—Used to establish the Level Of Detail (LOD) settings. JT files create separate scene nodes for each LOD. LOD is a way of displaying models with different numbers of polygons depending on how close they are to the camera using the Level of Detail controls. This can speed up the rendering time by limiting the number of polygons that need to be drawn.

- **Smart**—Creates LOD for the scene.

Copyright © Right Hemisphere 2007. All Rights Reserved.

JT File Import (.jt)

You can import and view JT File (.jt) files.

JT files represent an extremely robust and flexible data format, capable of storing directly renderable geometry, analytical geometry, geometric attributes, user metadata, hierarchical CAD product structure, and CAD Product Manufacturing Information (PMI) data including Geometric Dimensioning and Tolerance (GD&T) data.

Note that GD&T is also known as Feature Dimensioning and Tolerance (FD&T).

The import options differ depending on the version of Deep Exploration you have installed:

- Certain options are available with the CAD Edition of Deep Exploration.
- Certain options are available with the Standard Edition of Deep Exploration and the JT Module.

Note that support for the CAD format versions (on page 560) also differs depending on the version of Deep Exploration you have installed.

JT File CAD Edition Import

You can import and view JT File (.jt) files using the import options delivered with the CAD Edition of Deep Exploration.

For further information on using files, please see Opening Files (on page 39), Importing Files (on page 40), and Saving Files (on page 55).

Support

- 2D vector data.
- Assembly hierarchy.
- Materials and object names.
- Meshes.
- NURBS.
- Parts data.
- UV coordinates.
- Textures.

Limitations

- Animation.
- BOM support based on part names.
- Configurations.
- PMI.
- Solids.
- Tessellation control.

Copyright © Right Hemisphere 2007. All Rights Reserved.

Interface

Common—Used to establish the common settings.

- **Level of detail**—Used to establish the level of detail (LOD) to import. LOD is a way of displaying models with different numbers of polygons and can be helpful depending on how you view the model; in detail or from a distance. This can speed up the rendering time by limiting the number of polygons that need to be drawn.
  - **All**—Imports every level of detail. This can reduce the rendering time if the model has a large number of polygons. Note that when you use this option, all LODs are visible in the scene.
  - **Highest**—Imports only the highest level of detail. This helps to speed up rendering time for models that need to be viewed in detail.
  - **Lowest**—Imports only the lowest level of detail. This helps to speed up rendering time for models that only need to be viewed from a distance.
- **Import hidden objects**—Imports all hidden objects. If, after importing a file, you modify any visible objects that contain hidden sub-objects after import, those hidden objects are also modified.
- **Display hidden objects**—Displays all hidden objects in the viewport after importing the file.
- **Import sheet bodies**—Imports all construction geometry. Sheet bodies are flat surfaces from which each object is cut.

  Note: If a file contains sheet bodies, this option must be selected for the file to be imported correctly.

- **Import wireframes**—Imports all wireframes if any exist.
- **Unit**—Used to select the unit type for which you want to view its custom unit (scene unit) measurement in meters. For example, 1 custom unit = 0.01 meters.
  - **File default**—Imports the file using the file's units.
  - **Millimeters**—Imports the file in millimeters (mm).
  - **Centimeters**—Imports the file in centimeters (cm).
  - **Meters**—Imports the file in meters (m).
  - **Inches**—Imports the file in inches (in).
  - **Feet**—Imports the file in feet (ft).
- **Ignore material opacity**—Disregards any material transparency that may have been set in the original file via an external application. That is, all the objects appear opaque. For example, a material opacity of 30% for an object is ignored, and the object is displayed with 100% opacity.
- **Auto-correct view orientation**—Attempts to correct the file's original view orientation to align with Deep Exploration's view orientation.

Geometry Transform (on page 41)—Used to transform (rotate, position, and scale) the scene along the X, Y, and Z axes.

- **Rotation**—Used to set the degrees of rotation around each axis from 0 to 360 degrees. The rotation values can be entered with up to 6 decimal places.
  - **X**—Rotates the scene along the X axis.
  - **Y**—Rotates the scene along the Y axis.
  - **Z**—Rotates the scene along the Z axis.
- **Position**—Used to set the position of the scene along the X, Y, and Z axes.
  - **X**—Positions the scene along the X axis.

Copyright © Right Hemisphere 2007. All Rights Reserved.

  - **Y**—Positions the scene along the Y axis.
  - **Z**—Positions the scene along the Z axis.
- **Scale**—Used to scale the object along the X, Y, and Z axes.
  - **X**—Scales the scene along the X axis.
  - **Y**—Scales the scene along the Y axis.
  - **Z**—Scales the scene along the Z axis.

JT File Module Import

You can import and view JT File (.jt) files using the import options delivered with the Standard Edition of Deep Exploration and the JT Module.

For further information on using files, please see Opening Files (on page 39), Importing Files (on page 40), and Saving Files (on page 55).

Support

- 2D vector data.
- Assembly hierarchy.
- Materials and object names.
- Meshes.
- NURBS.
- Parts data.
- PMI including model views and model view configurations.
- UV coordinates.
- Textures.

Limitations

- Animation.
- BOM support based on part names.
- Solids.
- Tessellation control.

Interface

General—Used to establish general settings.

- **Import preference**—Used to establish the method used to import the surface definition of the file's model. JT files can store both NURBS and polygonal mesh information. Deep Exploration can import both of these information types.
  - **Meshes**—Imports the surface as mesh objects.
  - **NURBS**—Imports the surface as NURBS objects. If the file does not contain NURBS information and you select to import NURBS, mesh information is imported.
- **Import Metadata**—Choose whether or not to import metadata.
- **Level of detail**—Used to establish the level of detail (LOD) to import. LOD is a way of displaying models with different numbers of polygons and can be helpful depending on how you view the model; in detail or from a distance. This can speed up the rendering time by limiting the number of polygons that need to be drawn.

Copyright © Right Hemisphere 2007. All Rights Reserved.

  - **All**—Imports every level of detail so all are visible in the scene. User is free to delete unwanted LODs after import.
  - **Highest**—Imports only the highest level of detail.
  - **Lowest**—Imports only the lowest level of detail. This helps to speed up rendering time for models that only need to be viewed from a distance.
- **Join equal points**—Joins all the points that have equal (coincident) x,y,z coordinates. This smooths the lines enhancing the illustration quality, and it reduces the number of polygons resulting in a smaller file. Note that joining equal points processes points on an object by object basis, and does not look at coincident points between adjacent objects.
- **Auto-correct view orientation**—Attempts to correct the file's original view orientation to align with Deep Exploration's view orientation.

PMI—Imports any Product Manufacturing Information (PMI) within the file.

- **Import PMI** (on page 220)—The PMI data objects can be accessed from within the 3D Objects list. Note that you must have the 'Show Markups (on page 257)' command on to view PMI data in the viewport
- **Flip Import PMI**—Ensures that the PMI markups are oriented to the prevalent model views. i.e., they face the camera. If the markup exists in more than one model view then we will orient the markup to the first model view.
- **Metadata Markup Filter**—This string describes the markups, defined by regular expressions, that will be deemed as metadata.

Note: A regular expression is a string that describes or matches a set of strings, according to certain syntax rules. Regular expressions are used by many text editors and utilities to search and manipulate bodies of text based on certain patterns. Many programming languages support regular expressions for string manipulation.

Note: You can use a limited subset of Perl regular expressions (regex) as described here. In general all characters match themselves (including case) except for these metacharacters:

. Matches any character: 12.45 matches 12 followed by any character followed by 45

^ Matches the start of a string: ^right means the string must start with 'right'

$ Matches the end of a string: hemisphere$ means the string must end in 'hemisphere'

[] Character Class: matches any character between the brackets: [456] matches '4', '5' or '6'

Note 1: initial caret ^ reverses match: [^456] matches any character except '4', '5' or '6'

Note 2: character ranges can be described with a dash: [1-5] matches '1', 2', '3', '4' or '5'

{} Treat '{' as a metacharacter for future compatibility; has no special function at this time

() Grouping: treats the characters in parentheses as a group for the following operators to apply to:

? Quantifier: means the previous character or expression is optional (occurs 0 or 1 times): harbou?r matches 'harbor' or 'harbour'

* Quantifier: means the previous character or expression occurs 0 or more times: far.*out matches 'far' and 'out' with any characters in between

+ Quantifier: means the previous character or expression occurs 1 or more times: vr+m matches 'vrm', 'vrrm', 'vrrrm' and so on

| Alternation: Matches one of the characters or expressions either side: (his)|(hers} matches his or hers

WARNING: Always use parentheses for words as unlike the Perl Regex standard: his|hers is actually hi[sh]ers. For future compatibility, always use character classes [] for character alternation.

\ Escape character for inserting the above metacharacters as literals, e.g. '\.' matches period (full stop). Use '\\' to get a backslash!

So '(NOTES)|(TOLERANCE)|(TITLE_BLOCK)|(BOM)|(DF)' means the markup is treated as metadata if its label contains any of the sequences of letters 'NOTES', 'TOLERANCE' etc.

Copyright © Right Hemisphere 2007. All Rights Reserved.

- **Suppress Metadata Markups**—If this is set to YES, then the markups that are deemed to be metadata in the 3D viewport are not displayed. This allows a saving on load time and removes redundancy in the RH scene.
- **Ignore Reference Markups**—this filters out markups of the following type:
  - Center Line
  - Coordinate Systems
  - Reference Plane
  - Reference Point
  - Reference Axis
  - Reference Point Series
  - Reference Curve

It should be noted that these elements can make a significant difference to an e3_SCENE in terms of system performance, especially if the JT file is large.

- **Hide Model View Frames**—Removes the bounding rectangle markup and the associated model view name text from the model view. This forces the camera to reposition itself on the actual scene geometry in such a way as to ensure that the markups are still facing the camera.
- **Suppress Selection Highlighting**—If the JT part has BREP information then the edges of these BREPS are highlighted when associated markups are selected. If this is set to YES then the BREPS are not checked. The benefit of switching this off is that the load time is significantly quicker. This option will not work if the JT part does not have BREPS.
- **Load Model Views**—This feature has the following options:
  - **ALL** – load all model views.
  - **TOP LEVEL** – load all Model Views at level 0 (main node) and level 1 under the root node and ignore the rest.
  - **ASSEMBLY** – only load model views that are attached to JtkAssembly entities.
  - **PART** – only load model views that are attached to JtkPart entities.
  - **NONE** – do not load any model views.

Geometry Transform (on page 41)—Used to transform (rotate, position, and scale) the scene along the X, Y, and Z axes.

- **Rotation**—Used to set the degrees of rotation around each axis from 0 to 360 degrees. The rotation values can be entered with up to 6 decimal places.
  - **X**—Rotates the scene along the X axis.
  - **Y**—Rotates the scene along the Y axis.
  - **Z**—Rotates the scene along the Z axis.
- **Position**—Used to set the position of the scene along the X, Y, and Z axes.
  - **X**—Positions the scene along the X axis.
  - **Y**—Positions the scene along the Y axis.
  - **Z**—Positions the scene along the Z axis.
- **Scale**—Used to scale the object along the X, Y, and Z axes.
  - **X**—Scales the scene along the X axis.
  - **Y**—Scales the scene along the Y axis.
  - **Z**—Scales the scene along the Z axis.

Copyright © Right Hemisphere 2007. All Rights Reserved.

Lattice XVL Structure and Geometry Import (.xv0, .xv3)

You can import and view Lattice XVL Structure (.xv0) and Geometry (.xv3) files.

The .xv0 and .xv3 formats were developed by Lattice Technologies Incorporated and are a Precise eXtensible Virtual world description Language (P-XVL) files. The P-XVL format offers high compressibility and accuracy that is comparable to other 3D CAD file formats.

The import options differ depending on the version of Deep Exploration you have installed:

- Certain options are available with the CAD Edition of Deep Exploration.
- Certain options are available with the Standard Edition of Deep Exploration and the XVL Module.

Note that support for the CAD format versions (on page 560) also differs depending on the version of Deep Exploration you have installed.

Lattice XVL Structure and Geometry CAD Edition Import

You can import and view Lattice XVL Structure (.xv0) and Geometry (.xv3) files using the import options delivered with the CAD Edition of Deep Exploration.

For further information on using files, please see Opening Files (on page 39), Importing Files (on page 40), and Saving Files (on page 55).

Interface

Common—Used to establish the common settings including tessellation (arrangement and density of the polygons) settings. Note that if you enter 0 (zero) for any of the tessellation settings, they are not taken into effect during the tessellation process.

- **Surface deviation** (on page 42)—Determines the maximum distance allowed between original analytical surface and its tessellated representation. Triangle edges do not deviate from edges of the face by more than this amount. The units are expressed as unit size based on those used by the model. A smaller surface deviation produces more triangles for smoother models.
- **Normal deviation** (on page 42)—Determines the maximum angular deviation (in degrees) allowed between a analytical surface and its triangulation. Pairs of triangles do not incorporate a dihedral angle greater than this amount. For example, this setting dictates the minimum number of facets around a smaller circle or cylinder regardless of the Surface Deviation setting. This parameter gives you added control over faces with very small radii. Lower values result in finer tessellations, while higher values give coarser tessellations.
- **Import hidden objects**—Imports all hidden objects. If, after importing a file, you modify any visible objects that contain hidden sub-objects after import, those hidden objects are also modified.
- **Display hidden objects**—Displays all hidden objects in the viewport after importing the file.
- **Import sheet bodies**—Imports all construction geometry. Sheet bodies are flat surfaces from which each object is cut.

  Note: If a file contains sheet bodies, this option must be selected for the file to be imported correctly.

- **Import wireframes**—Imports all wireframes if any exist.
- **Unit**—Used to select the unit type for which you want to view its custom unit (scene unit) measurement in meters. For example, 1 custom unit = 0.01 meters.
  - **File default**—Imports the file using the file's units.

Copyright © Right Hemisphere 2007. All Rights Reserved.

  - **Millimeters**—Imports the file in millimeters (mm).
  - **Centimeters**—Imports the file in centimeters (cm).
  - **Meters**—Imports the file in meters (m).
  - **Inches**—Imports the file in inches (in).
  - **Feet**—Imports the file in feet (ft).
- **Ignore material opacity**—Disregards any material transparency that may have been set in the original file via an external application. That is, all the objects appear opaque. For example, a material opacity of 30% for an object is ignored, and the object is displayed with 100% opacity.
- **Auto-correct view orientation**—Attempts to correct the file's original view orientation to align with Deep Exploration's view orientation.

Geometry Transform (on page 41)—Used to transform (rotate, position, and scale) the scene along the X, Y, and Z axes.

- **Rotation**—Used to set the degrees of rotation around each axis from 0 to 360 degrees. The rotation values can be entered with up to 6 decimal places.
  - **X**—Rotates the scene along the X axis.
  - **Y**—Rotates the scene along the Y axis.
  - **Z**—Rotates the scene along the Z axis.
- **Position**—Used to set the position of the scene along the X, Y, and Z axes.
  - **X**—Positions the scene along the X axis.
  - **Y**—Positions the scene along the Y axis.
  - **Z**—Positions the scene along the Z axis.
- **Scale**—Used to scale the object along the X, Y, and Z axes.
  - **X**—Scales the scene along the X axis.
  - **Y**—Scales the scene along the Y axis.
  - **Z**—Scales the scene along the Z axis.

Lattice XVL Structure and Geometry Module Import

You can import and view Lattice XVL Structure (.xv0) and Geometry (.xv3) files using the import options delivered with the Standard Edition of Deep Exploration and the Lattice XVL Module.

For further information on using files, please see Opening Files (on page 39), Importing Files (on page 40), and Saving Files (on page 55).

Interface

Common—Used to establish the common settings including tessellation (arrangement and density of the polygons) settings. Note that if you enter 0 (zero) for any of the tessellation settings, they are not taken into effect during the tessellation process.

- **Surface deviation** (on page 42)—Determines the maximum distance allowed between original analytical surface and its tessellated representation. Triangle edges do not deviate from edges of the face by more than this amount. The units are expressed as unit size based on those used by the model. A smaller surface deviation produces more triangles for smoother models.

Copyright © Right Hemisphere 2007. All Rights Reserved.

- **Normal deviation** (on page 42)—Determines the maximum angular deviation (in degrees) allowed between a analytical surface and its triangulation. Pairs of triangles do not incorporate a dihedral angle greater than this amount. For example, this setting dictates the minimum number of facets around a smaller circle or cylinder regardless of the Surface Deviation setting. This parameter gives you added control over faces with very small radii. Lower values result in finer tessellations, while higher values give coarser tessellations.
- **Import hidden objects**—Imports all hidden objects. If, after importing a file, you modify any visible objects that contain hidden sub-objects after import, those hidden objects are also modified.
- **Display hidden objects**—Displays all hidden objects in the viewport after importing the file.
- **Import sheet bodies**—Imports all construction geometry. Sheet bodies are flat surfaces from which each object is cut.

  Note: If a file contains sheet bodies, this option must be selected for the file to be imported correctly.

- **Import wireframes**—Imports all wireframes if any exist.
- **Unit**—Used to select the unit type for which you want to view its custom unit (scene unit) measurement in meters. For example, 1 custom unit = 0.01 meters.
  - **File default**—Imports the file using the file's units.
  - **Millimeters**—Imports the file in millimeters (mm).
  - **Centimeters**—Imports the file in centimeters (cm).
  - **Meters**—Imports the file in meters (m).
  - **Inches**—Imports the file in inches (in).
  - **Feet**—Imports the file in feet (ft).
- **Ignore material opacity**—Disregards any material transparency that may have been set in the original file via an external application. That is, all the objects appear opaque. For example, a material opacity of 30% for an object is ignored, and the object is displayed with 100% opacity.
- **Auto-correct view orientation**—Attempts to correct the file's original view orientation to align with Deep Exploration's view orientation.

Geometry Transform (on page 41)—Used to transform (rotate, position, and scale) the scene along the X, Y, and Z axes.

- **Rotation**—Used to set the degrees of rotation around each axis from 0 to 360 degrees. The rotation values can be entered with up to 6 decimal places.
  - **X**—Rotates the scene along the X axis.
  - **Y**—Rotates the scene along the Y axis.
  - **Z**—Rotates the scene along the Z axis.
- **Position**—Used to set the position of the scene along the X, Y, and Z axes.
  - **X**—Positions the scene along the X axis.
  - **Y**—Positions the scene along the Y axis.
  - **Z**—Positions the scene along the Z axis.
- **Scale**—Used to scale the object along the X, Y, and Z axes.
  - **X**—Scales the scene along the X axis.
  - **Y**—Scales the scene along the Y axis.
  - **Z**—Scales the scene along the Z axis.

Copyright © Right Hemisphere 2007. All Rights Reserved.

MicroStation CAD Graphic Import (.dgn)

You can import and view MicroStation CAD Graphic (.dgn) files.

For further information on using files, please see Opening Files (on page 39), Importing Files (on page 40), and Saving Files (on page 55).

Support

- 2D vector data (text and dimensions).
- Assembly hierarchy.
- Meshes.
- Parts data.
- Material and object names.
- Tessellation control.
- Textures.

Limitations

- Animation.
- BOM support based on part names.
- Configurations.
- Solids/NURBS.
- UV coordinates.

Interface

Common—Used to establish the common settings including tessellation (arrangement and density of the polygons) settings. Note that if you enter 0 (zero) for any of the tessellation settings, they are not taken into effect during the tessellation process.

- **Grouping**—Used to establish the object grouping.
  - **Level**—Groups objects by level.
  - **Group ID**—Groups objects by their group ID.
  - **Element type**—Groups objects by their element type. For example, cones, shapes, and BSpline surfaces.
- **Surface deviation** (on page 42)—Determines the maximum distance allowed between original analytical surface and its tessellated representation. Triangle edges do not deviate from edges of the face by more than this amount. The units are expressed as unit size based on those used by the model. A smaller surface deviation produces more triangles for smoother models.
- **Normal deviation** (on page 42)—Determines the maximum angular deviation (in degrees) allowed between a analytical surface and its triangulation. Pairs of triangles do not incorporate a dihedral angle greater than this amount. For example, this setting dictates the minimum number of facets around a smaller circle or cylinder regardless of the Surface Deviation setting. This parameter gives you added control over faces with very small radii. Lower values result in finer tessellations, while higher values give coarser tessellations. is this supposed to be here.
- **Grid aspect ratio** (on page 42)—Determines the ratio (between 0 and 1) of the width to height for each 'surface square'. For example, if you enter 1, the tessellation process attempts to produce squares instead of rectangles. This is helpful in avoiding the creation of very long, narrow triangles which can cause undesirable lighting and shading artifacts.
- **Polygon output**—Used to establish the shape of the polygons when importing the file.

Copyright © Right Hemisphere 2007. All Rights Reserved.

  - **Only triangles**—Uses triangle-shaped polygons.
  - **Quadrilaterals and triangles**—Uses a combination of quadrilateral and triangle-shaped polygons.
- **Import solids**—Imports all solids when importing the file. This option is helpful for previewing files when not selected.

  Note: Only wireframes are imported when this option is not selected.

- **Import text and tags**—Imports text and tags. Certain text is prevented from import such as numbers in dimensional information.

  Note: This option reduces memory and file importing performance.

- **Import external reference**—Imports all external reference files. This is helpful for viewing the contents of a selected file.

  Note: This option reduces memory and file importing performance.

- **Unit**—Used to select the unit type for which you want to view its custom unit (scene unit) measurement in meters. For example, 1 custom unit = 0.01 meters.
  - **File default**—Imports the file using the file's units.
  - **Millimeters**—Imports the file in millimeters (mm).
  - **Centimeters**—Imports the file in centimeters (cm).
  - **Meters**—Imports the file in meters (m).
  - **Inches**—Imports the file in inches (in).
  - **Feet**—Imports the file in feet (ft).
- **Ignore material opacity**—Disregards any material transparency that may have been set in the original file via an external application. That is, all the objects appear opaque. For example, a material opacity of 30% for an object is ignored, and the object is displayed with 100% opacity.
- **Auto-correct view orientation**—Attempts to correct the file's original view orientation to align with Deep Exploration's view orientation.

Geometry Transform (on page 41)—Used to transform (rotate, position, and scale) the scene along the X, Y, and Z axes.

- **Rotation**—Used to set the degrees of rotation around each axis from 0 to 360 degrees. The rotation values can be entered with up to 6 decimal places.
  - **X**—Rotates the scene along the X axis.
  - **Y**—Rotates the scene along the Y axis.
  - **Z**—Rotates the scene along the Z axis.
- **Position**—Used to set the position of the scene along the X, Y, and Z axes.
  - **X**—Positions the scene along the X axis.
  - **Y**—Positions the scene along the Y axis.
  - **Z**—Positions the scene along the Z axis.
- **Scale**—Used to scale the object along the X, Y, and Z axes.
  - **X**—Scales the scene along the X axis.
  - **Y**—Scales the scene along the Y axis.
  - **Z**—Scales the scene along the Z axis.

Copyright © Right Hemisphere 2007. All Rights Reserved.

Neutral Part File Import (.neu)

You can import and view Neutral Part (.neu) files.

The import options differ depending on the version of Deep Exploration you have installed:

- Certain options are available with the CAD Edition of Deep Exploration.
- Certain options are available with the Standard Edition of Deep Exploration and the Pro/E Module.

Note that support for the CAD format versions (on page 560) also differs depending on the version of Deep Exploration you have installed.

Import Rules

The following rules apply when importing Pro/E files:

- When a file is first opened with the Pro/E Module, a medium resolution is used by default for fast file loading, and a dialog displays these resolution settings.
- The latest version of any part file within the folder is always opened. For example, sprng.prt.3 is opened if the folder contains spring.prt.1, spring.prt.2 and spring.prt.3.
- Parts and sub-assemblies are added to the external files list.
- Sub-assembly hierarchy is added for all part files, if any.
- Pro/E searches through folders for part and assembly files and for corresponding accelerator files (on page 623):

1. The current directory of the file.
2. In the search paths specified in the CAD Modules tab (on page 285).

If a part, assembly or accelerator file is not found, a message is displayed next to the object in the Scene Components panel (on page 329) advising you of this.

Neutral Part File CAD Edition Import

You can import and view Neutral Part (.neu) files using the import options delivered with the CAD Edition of Deep Exploration.

For further information on using files, please see Opening Files (on page 39), Importing Files (on page 40), and Saving Files (on page 55).

Support

- 2D vector data.
- Assembly hierarchy.
- Meshes.
- Parts data.
- Material and object names.
- Tessellation control.

Limitations

- Animation.
- BOM support based on part names.
- Configurations.

Copyright © Right Hemisphere 2007. All Rights Reserved.

- Solids/NURBS.
- Textures.
- UV coordinates.

Interface

Common—Used to establish the common settings including tessellation (arrangement and density of the polygons) settings. Note that if you enter 0 (zero) for any of the tessellation settings, they are not taken into effect during the tessellation process.

- **Surface deviation** (on page 42)—Determines the maximum distance allowed between original analytical surface and its tessellated representation. Triangle edges do not deviate from edges of the face by more than this amount. The units are expressed as unit size based on those used by the model. A smaller surface deviation produces more triangles for smoother models.
- **Normal deviation** (on page 42)—Determines the maximum angular deviation (in degrees) allowed between a analytical surface and its triangulation. Pairs of triangles do not incorporate a dihedral angle greater than this amount. For example, this setting dictates the minimum number of facets around a smaller circle or cylinder regardless of the Surface Deviation setting. This parameter gives you added control over faces with very small radii. Lower values result in finer tessellations, while higher values give coarser tessellations.
- **Import hidden objects**—Imports all hidden objects. If, after importing a file, you modify any visible objects that contain hidden sub-objects after import, those hidden objects are also modified.
- **Display hidden objects**—Displays all hidden objects in the viewport after importing the file.
- **Import sheet bodies**—Imports all construction geometry. Sheet bodies are flat surfaces from which each object is cut.

  Note: If a file contains sheet bodies, this option must be selected for the file to be imported correctly.

- **Import wireframes**—Imports all wireframes if any exist.
- **Unit**—Used to select the unit type for which you want to view its custom unit (scene unit) measurement in meters. For example, 1 custom unit = 0.01 meters.
  - **File default**—Imports the file using the file's units.
  - **Millimeters**—Imports the file in millimeters (mm).
  - **Centimeters**—Imports the file in centimeters (cm).
  - **Meters**—Imports the file in meters (m).
  - **Inches**—Imports the file in inches (in).
  - **Feet**—Imports the file in feet (ft).
- **Ignore material opacity**—Disregards any material transparency that may have been set in the original file via an external application. That is, all the objects appear opaque. For example, a material opacity of 30% for an object is ignored, and the object is displayed with 100% opacity.
- **Auto-correct view orientation**—Attempts to correct the file's original view orientation to align with Deep Exploration's view orientation.
- **Import PMI** (on page 220)—Imports any Product Manufacturing Information (PMI) within the file. The PMI data objects can be accessed from within the 3D Objects list. Note that you must have the 'Show Markups (on page 257)' command on to view PMI data in the viewport.

Geometry Transform (on page 41)—Used to transform (rotate, position, and scale) the scene along the X, Y, and Z axes.

Copyright © Right Hemisphere 2007. All Rights Reserved.

- **Rotation**—Used to set the degrees of rotation around each axis from 0 to 360 degrees. The rotation values can be entered with up to 6 decimal places.
  - **X**—Rotates the scene along the X axis.
  - **Y**—Rotates the scene along the Y axis.
  - **Z**—Rotates the scene along the Z axis.
- **Position**—Used to set the position of the scene along the X, Y, and Z axes.
  - **X**—Positions the scene along the X axis.
  - **Y**—Positions the scene along the Y axis.
  - **Z**—Positions the scene along the Z axis.
- **Scale**—Used to scale the object along the X, Y, and Z axes.
  - **X**—Scales the scene along the X axis.
  - **Y**—Scales the scene along the Y axis.
  - **Z**—Scales the scene along the Z axis.

Neutral Part File Module Import

You can import and view Neutral Part (.neu) files using the import options delivered with the Standard Edition of Deep Exploration and the CoreCAD or Pro/E Module.

For further information on using files, please see Opening Files (on page 39), Importing Files (on page 40), and Saving Files (on page 55).

Support

- 2D vector data.
- Assembly hierarchy.
- Meshes.
- Parts data.
- Material and object names.
- Tessellation control.
- UV coordinates is supported when importing using the Legacy method.

Limitations

- Animation.
- BOM support based on part names.
- Configurations.
- Solids/NURBS.
- Textures.

Interface

Import Method—Used to establish the way in which to import the file.

- **Method**—The method in which the file is imported. Each method utilizes differing import options to import the file.
  - **Method A**—Imports the file using Method A.

Copyright © Right Hemisphere 2007. All Rights Reserved.

  - **Legacy**—Imports the file using the Legacy method.

Method A—Used to establish the Method A settings.

- **Surface deviation** (on page 42)—Determines the maximum distance allowed between original analytical surface and its tessellated representation. Triangle edges do not deviate from edges of the face by more than this amount. The units are expressed as unit size based on those used by the model. A smaller surface deviation produces more triangles for smoother models.
- **Normal deviation** (on page 42)—Determines the maximum angular deviation (in degrees) allowed between a analytical surface and its triangulation. Pairs of triangles do not incorporate a dihedral angle greater than this amount. For example, this setting dictates the minimum number of facets around a smaller circle or cylinder regardless of the Surface Deviation setting. This parameter gives you added control over faces with very small radii. Lower values result in finer tessellations, while higher values give coarser tessellations.
- **Import hidden objects**—Imports all hidden objects. If, after importing a file, you modify any visible objects that contain hidden sub-objects after import, those hidden objects are also modified.
- **Display hidden objects**—Displays all hidden objects in the viewport after importing the file.
- **Import sheet bodies**—Imports all construction geometry. Sheet bodies are flat surfaces from which each object is cut.

  Note: If a file contains sheet bodies, this option must be selected for the file to be imported correctly.

- **Import wireframes**—Imports all wireframes if any exist.
- **Unit**—Used to select the unit type for which you want to view its custom unit (scene unit) measurement in meters. For example, 1 custom unit = 0.01 meters.
  - **File default**—Imports the file using the file's units.
  - **Millimeters**—Imports the file in millimeters (mm).
  - **Centimeters**—Imports the file in centimeters (cm).
  - **Meters**—Imports the file in meters (m).
  - **Inches**—Imports the file in inches (in).
  - **Feet**—Imports the file in feet (ft).
- **Ignore material opacity**—Disregards any material transparency that may have been set in the original file via an external application. That is, all the objects appear opaque. For example, a material opacity of 30% for an object is ignored, and the object is displayed with 100% opacity.
- **Auto-correct view orientation**—Attempts to correct the file's original view orientation to align with Deep Exploration's view orientation.
- **Import PMI** (on page 220)—Imports any Product Manufacturing Information (PMI) within the file. The PMI data objects can be accessed from within the 3D Objects list. Note that you must have the 'Show Markups (on page 257)' command on to view PMI data in the viewport.

Legacy—Used to establish the Legacy settings.

- **Default Tessellation** (on page 43)—Used to import the file using the default tessellation settings (arrangement and density of the polygons).

  Note: If you enter 0 (zero) for any of the tessellation settings, they are not taken into effect during the tessellation process.

  - **Tessellation** (on page 42)—Used to import the file using the level of tessellation.

Copyright © Right Hemisphere 2007. All Rights Reserved.

  - **Very high**—Displays a very high resolution using the values directly from the file. You are able to set custom values to give you a higher tessellation if a file has a very high polygon count. Note that using this option reduces processing speed.
  - **High**—Displays a high resolution with a high number of polygons. That is, the planar tolerance is set to the tessellation tolerance.
  - **Medium**—Displays a medium resolution with a medium number of polygons. That is, the planar tolerance is set to the tessellation tolerance and both are multiplied by 10.
  - **Low**—Displays a low resolution with a low number of polygons. That is, the planar tolerance is set to the tessellation tolerance and both are multiplied by 100. This option increases processing speed.

- **Custom Tessellation**—Used to customize the tessellation settings for all objects within the model. These settings are used when you triangulate (mesh) the faces/bodies of the model.

  Note: If you enter 0 (zero) for any of the tessellation settings, they are not taken into effect during the tessellation process.

  - **Angle tolerance** (on page 46)—The maximum angular deviation allowed between a face and its triangulation. Pairs of triangles do not incorporate a dihedral angle greater than this amount. This parameter gives a user added control over faces with very small radii. Lower values result in finer tessellations, while higher values give coarser tessellations.
  - **Planar tolerance** (on page 46)—The maximum distance allowed between a face and its triangulation for 3D solid objects. Triangle interiors do not deviate from the face interior by more than this amount.
  - **Tessellation tolerance** (on page 46)—The maximum distance allowed between an edge/curve and its tessellation. Triangle edges do not deviate from edges of the face by more than this amount, or by more than the maximum distance between the edge and the side of the facets along the edge when used in face triangulation.

    Tip: If you only want tessellation of edges/curves, enter values for the tessellation tolerance and angular tolerance.

    Note: Both planar and tessellation tolerance are considered in the units of the model being meshed. Therefore, they should be set to a similar value according to the model size to noticeably reduce the number of triangles generated. Model size/100 is a good starting point depending whether you want a fine or coarse mesh.

- **Display**—Used to display 2D vectors and 3D solids, or 3D solids only.
  - **2D vector and 3D solids**—Displays 2D vectors and 3D solids. Only the tessellation of 2D vectors is affected.
  - **3D solids**—Displays 3D solid objects only. As planar tolerance is for face triangulation of 3D solid objects only, this selection ensures planar tolerance affects the tessellation.
- **Tessellation** (on page 42)—Used to select the tessellation with which to import the file.
  - **Default**—Imports the file using the default tessellation settings.
  - **Custom**—Imports the file using the customized tessellation settings.

Geometry Transform (on page 41)—Used to transform (rotate, position, and scale) the scene along the X, Y, and Z axes.

- **Rotation**—Used to set the degrees of rotation around each axis from 0 to 360 degrees. The rotation values can be entered with up to 6 decimal places.
  - **X**—Rotates the scene along the X axis.
  - **Y**—Rotates the scene along the Y axis.
  - **Z**—Rotates the scene along the Z axis.
- **Position**—Used to set the position of the scene along the X, Y, and Z axes.

Copyright © Right Hemisphere 2007. All Rights Reserved.

  - **X**—Positions the scene along the X axis.
  - **Y**—Positions the scene along the Y axis.
  - **Z**—Positions the scene along the Z axis.
- **Scale**—Used to scale the object along the X, Y, and Z axes.
  - **X**—Scales the scene along the X axis.
  - **Y**—Scales the scene along the Y axis.
  - **Z**—Scales the scene along the Z axis.

Copyright © Right Hemisphere 2007. All Rights Reserved.

Parasolid CAD File Import (.x_b, .x_t, .xmt, .xmt_txt)

You can import and view Parasolid CAD (.x_b, .x_t, .xmt, .xmt_txt) files.

Parasolid X_T is the exchange format for Parasolid files. The X_T-format is used by different CAD/CAM-applications such as Unigraphics, SolidWorks, and SolidEdge.

The import options differ depending on the version of Deep Exploration you have installed:

- Certain options are available with the CAD Edition of Deep Exploration.
- Certain options are available with the Standard Edition of Deep Exploration and the CoreCAD Module or Pro/E Module.

Note that support for the CAD format versions (on page 560) also differs depending on the version of Deep Exploration you have installed.

Import Rules

The following rules apply when importing Pro/E files:

- When a file is first opened with the Pro/E Module, a medium resolution is used by default for fast file loading, and a dialog displays these resolution settings.
- The latest version of any part file within the folder is always opened. For example, sprng.prt.3 is opened if the folder contains spring.prt.1, spring.prt.2 and spring.prt.3.
- Parts and sub-assemblies are added to the external files list.
- Sub-assembly hierarchy is added for all part files, if any.
- Pro/E searches through folders for part and assembly files and for corresponding accelerator files (on page 623):

1. The current directory of the file.
2. In the search paths specified in the CAD Modules tab (on page 285).

If a part, assembly or accelerator file is not found, a message is displayed next to the object in the Scene Components panel (on page 329) advising you of this.

Parasolid CAD File Import (.x_b, .x_t, .xmt, .xmt_txt)

You can import and view Parasolid CAD (.x_b, .x_t, .xmt, .xmt_txt) files using the import options delivered with the CAD Edition of Deep Exploration.

For further information on using files, please see Opening Files (on page 39), Importing Files (on page 40), and Saving Files (on page 55).

Support

- Assembly hierarchy.
- Meshes.
- Parts data.
- Material and object names.
- Tessellation control.

Limitations

- 2D vector data.
- Animation.

Copyright © Right Hemisphere 2007. All Rights Reserved.

- BOM support based on part names.
- Configurations.
- Solids/NURBS.
- Textures.
- UV coordinates.

Interface

Common—Used to establish the common settings including tessellation (arrangement and density of the polygons) settings. Note that if you enter 0 (zero) for any of the tessellation settings, they are not taken into effect during the tessellation process.

- **Surface deviation** (on page 42)—Determines the maximum distance allowed between original analytical surface and its tessellated representation. Triangle edges do not deviate from edges of the face by more than this amount. The units are expressed as unit size based on those used by the model. A smaller surface deviation produces more triangles for smoother models.
- **Normal deviation** (on page 42)—Determines the maximum angular deviation (in degrees) allowed between a analytical surface and its triangulation. Pairs of triangles do not incorporate a dihedral angle greater than this amount. For example, this setting dictates the minimum number of facets around a smaller circle or cylinder regardless of the Surface Deviation setting. This parameter gives you added control over faces with very small radii. Lower values result in finer tessellations, while higher values give coarser tessellations.
- **Import hidden objects**—Imports all hidden objects. If, after importing a file, you modify any visible objects that contain hidden sub-objects after import, those hidden objects are also modified.
- **Display hidden objects**—Displays all hidden objects in the viewport after importing the file.
- **Import sheet bodies**—Imports all construction geometry. Sheet bodies are flat surfaces from which each object is cut.

  Note: If a file contains sheet bodies, this option must be selected for the file to be imported correctly.

- **Import wireframes**—Imports all wireframes if any exist.
- **Unit**—Used to select the unit type for which you want to view its custom unit (scene unit) measurement in meters. For example, 1 custom unit = 0.01 meters.
  - **File default**—Imports the file using the file's units.
  - **Millimeters**—Imports the file in millimeters (mm).
  - **Centimeters**—Imports the file in centimeters (cm).
  - **Meters**—Imports the file in meters (m).
  - **Inches**—Imports the file in inches (in).
  - **Feet**—Imports the file in feet (ft).
- **Ignore material opacity**—Disregards any material transparency that may have been set in the original file via an external application. That is, all the objects appear opaque. For example, a material opacity of 30% for an object is ignored, and the object is displayed with 100% opacity.
- **Auto-correct view orientation**—Attempts to correct the file's original view orientation to align with Deep Exploration's view orientation.

Geometry Transform (on page 41)—Used to transform (rotate, position, and scale) the scene along the X, Y, and Z axes.

Copyright © Right Hemisphere 2007. All Rights Reserved.

- **Rotation**—Used to set the degrees of rotation around each axis from 0 to 360 degrees. The rotation values can be entered with up to 6 decimal places.
  - **X**—Rotates the scene along the X axis.
  - **Y**—Rotates the scene along the Y axis.
  - **Z**—Rotates the scene along the Z axis.
- **Position**—Used to set the position of the scene along the X, Y, and Z axes.
  - **X**—Positions the scene along the X axis.
  - **Y**—Positions the scene along the Y axis.
  - **Z**—Positions the scene along the Z axis.
- **Scale**—Used to scale the object along the X, Y, and Z axes.
  - **X**—Scales the scene along the X axis.
  - **Y**—Scales the scene along the Y axis.
  - **Z**—Scales the scene along the Z axis.

Parasolid CAD File Module Import

You can import and view Parasolid CAD (.x_b, .x_t, .xmt, .xmt_txt) files using the import options delivered with the Standard Edition of Deep Exploration and the CoreCAD or Pro/E Module.

For further information on using files, please see Opening Files (on page 39), Importing Files (on page 40), and Saving Files (on page 55).

Support

- Assembly hierarchy.
- Meshes.
- Parts data.
- Material and object names.
- Tessellation control is supported when importing using Method A.

Limitations

- 2D vector data.
- Animation.
- BOM support based on part names.
- Configurations.
- Solids/NURBS.
- Textures.
- UV coordinates.

Interface

Import Method—Used to establish the way in which to import the file.

- **Method**—The method in which the file is imported. Each method utilizes differing import options to import the file.
  - **Method A**—Imports the file using Method A.

Copyright © Right Hemisphere 2007. All Rights Reserved.

  - **Legacy**—Imports the file using the Legacy method.

Method A—Used to establish the Method A settings.

- **Surface deviation** (on page 42)—Determines the maximum distance allowed between original analytical surface and its tessellated representation. Triangle edges do not deviate from edges of the face by more than this amount. The units are expressed as unit size based on those used by the model. A smaller surface deviation produces more triangles for smoother models.
- **Normal deviation** (on page 42)—Determines the maximum angular deviation (in degrees) allowed between a analytical surface and its triangulation. Pairs of triangles do not incorporate a dihedral angle greater than this amount. For example, this setting dictates the minimum number of facets around a smaller circle or cylinder regardless of the Surface Deviation setting. This parameter gives you added control over faces with very small radii. Lower values result in finer tessellations, while higher values give coarser tessellations.
- **Import hidden objects**—Imports all hidden objects. If, after importing a file, you modify any visible objects that contain hidden sub-objects after import, those hidden objects are also modified.
- **Display hidden objects**—Displays all hidden objects in the viewport after importing the file.
- **Import sheet bodies**—Imports all construction geometry. Sheet bodies are flat surfaces from which each object is cut.

  Note: If a file contains sheet bodies, this option must be selected for the file to be imported correctly.

- **Import wireframes**—Imports all wireframes if any exist.
- **Unit**—Used to select the unit type for which you want to view its custom unit (scene unit) measurement in meters. For example, 1 custom unit = 0.01 meters.
  - **File default**—Imports the file using the file's units.
  - **Millimeters**—Imports the file in millimeters (mm).
  - **Centimeters**—Imports the file in centimeters (cm).
  - **Meters**—Imports the file in meters (m).
  - **Inches**—Imports the file in inches (in).
  - **Feet**—Imports the file in feet (ft).
- **Ignore material opacity**—Disregards any material transparency that may have been set in the original file via an external application. That is, all the objects appear opaque. For example, a material opacity of 30% for an object is ignored, and the object is displayed with 100% opacity.
- **Auto-correct view orientation**—Attempts to correct the file's original view orientation to align with Deep Exploration's view orientation.
- **Import PMI** (on page 220)—Imports any Product Manufacturing Information (PMI) within the file. The PMI data objects can be accessed from within the 3D Objects list. Note that you must have the 'Show Markups (on page 257)' command on to view PMI data in the viewport.

Legacy—Used to establish the Legacy settings.

- **Default Tessellation** (on page 43)—Used to import the file using the default tessellation settings (arrangement and density of the polygons).

  Note: If you enter 0 (zero) for any of the tessellation settings, they are not taken into effect during the tessellation process.

  - **Tessellation** (on page 42)—Used to import the file using the level of tessellation.

Copyright © Right Hemisphere 2007. All Rights Reserved.

  - **Very high**—Displays a very high resolution using the values directly from the file. You are able to set custom values to give you a higher tessellation if a file has a very high polygon count. Note that using this option reduces processing speed.
  - **High**—Displays a high resolution with a high number of polygons. That is, the planar tolerance is set to the tessellation tolerance.
  - **Medium**—Displays a medium resolution with a medium number of polygons. That is, the planar tolerance is set to the tessellation tolerance and both are multiplied by 10.
  - **Low**—Displays a low resolution with a low number of polygons. That is, the planar tolerance is set to the tessellation tolerance and both are multiplied by 100. This option increases processing speed.

- **Custom Tessellation**—Used to customize the tessellation settings for all objects within the model. These settings are used when you triangulate (mesh) the faces/bodies of the model.

  Note: If you enter 0 (zero) for any of the tessellation settings, they are not taken into effect during the tessellation process.

  - **Angle tolerance** (on page 46)—The maximum angular deviation allowed between a face and its triangulation. Pairs of triangles do not incorporate a dihedral angle greater than this amount. This parameter gives a user added control over faces with very small radii. Lower values result in finer tessellations, while higher values give coarser tessellations.
  - **Planar tolerance** (on page 46)—The maximum distance allowed between a face and its triangulation for 3D solid objects. Triangle interiors do not deviate from the face interior by more than this amount.
  - **Tessellation tolerance** (on page 46)—The maximum distance allowed between an edge/curve and its tessellation. Triangle edges do not deviate from edges of the face by more than this amount, or by more than the maximum distance between the edge and the side of the facets along the edge when used in face triangulation.

    Tip: If you only want tessellation of edges/curves, enter values for the tessellation tolerance and angular tolerance.

    Note: Both planar and tessellation tolerance are considered in the units of the model being meshed. Therefore, they should be set to a similar value according to the model size to noticeably reduce the number of triangles generated. Model size/100 is a good starting point depending whether you want a fine or coarse mesh.

- **Display**—Used to display 2D vectors and 3D solids, or 3D solids only.
  - **2D vector and 3D solids**—Displays 2D vectors and 3D solids. Only the tessellation of 2D vectors is affected.
  - **3D solids**—Displays 3D solid objects only. As planar tolerance is for face triangulation of 3D solid objects only, this selection ensures planar tolerance affects the tessellation.
- **Tessellation** (on page 42)—Used to select the tessellation with which to import the file.
  - **Default**—Imports the file using the default tessellation settings.
  - **Custom**—Imports the file using the customized tessellation settings.

Geometry Transform (on page 41)—Used to transform (rotate, position, and scale) the scene along the X, Y, and Z axes.

- **Rotation**—Used to set the degrees of rotation around each axis from 0 to 360 degrees. The rotation values can be entered with up to 6 decimal places.
  - **X**—Rotates the scene along the X axis.
  - **Y**—Rotates the scene along the Y axis.
  - **Z**—Rotates the scene along the Z axis.
- **Position**—Used to set the position of the scene along the X, Y, and Z axes.

Copyright © Right Hemisphere 2007. All Rights Reserved.

  - **X**—Positions the scene along the X axis.
  - **Y**—Positions the scene along the Y axis.
  - **Z**—Positions the scene along the Z axis.
- **Scale**—Used to scale the object along the X, Y, and Z axes.
  - **X**—Scales the scene along the X axis.
  - **Y**—Scales the scene along the Y axis.
  - **Z**—Scales the scene along the Z axis.

Copyright © Right Hemisphere 2007. All Rights Reserved.

Pro/ENGINEER Assembly Import (.asm)

You can import and view Pro/ENGINEER Assembly (.asm) files.

The import options differ depending on the version of Deep Exploration you have installed:

- Certain options are available with the CAD Edition of Deep Exploration.
- Certain options are available with the Standard Edition of Deep Exploration and the CoreCAD Module or Pro/E Module.

Note that support for the CAD format versions (on page 560) also differs depending on the version of Deep Exploration you have installed.

Import Rules

The following rules apply when importing Pro/E files:

- When a file is first opened with the Pro/E Module, a medium resolution is used by default for fast file loading, and a dialog displays these resolution settings.

  Note: You can retrieve color information for Pro/ENGINEER models, parts, and assemblies. However, for Pro/ENGINEER models, only the color saved in releases of Pro/ENGINEER Wildfire is retrieved.

- The latest version of any part file within the folder is always opened. For example, sprng.prt.3 is opened if the folder contains spring.prt.1, spring.prt.2 and spring.prt.3.
- Parts and sub-assemblies are added to the external files list.
- Sub-assembly hierarchy is added for all part files, if any.
- Pro/E searches through folders for part and assembly files and for corresponding accelerator files (on page 623):

1. The current directory of the file.
2. In the search paths specified in the CAD Modules tab (on page 285).

If a part, assembly or accelerator file is not found, a message is displayed next to the object in the Scene Components panel (on page 329) advising you of this.

Accelerator Files

You can reduce the time required to retrieve a part or assembly file by saving the file instance in an 'instance accelerator file' with the Pro/ENGINEER software (http://www.ptc.com/). Each instance is saved in its own unique accelerator file: part instance files are called instance[name].xpr and assembly instance files are called instance[name].xas.

Note that the following information relates to Pro/ENGINEER only.

Saving Parts and Assembly Instances

Saving instances of parts and assemblies is controlled by the Save Instance Accelerator variable. This variable can be modified in Pro/ENGINEER using one of two methods:

- By setting the configuration file option 'save_instance_accelerator'.
- By choosing Files > Instance Operations > Accelerator Options to open the Instance Accelerator dialog and establish the settings.

Copyright © Right Hemisphere 2007. All Rights Reserved.

Procedure

To save the accelerator file with the instance, do one of the following:

- Click **Open in the Family Table**, and then choose **File > Save** or **File > Save a Copy** on the menu bar. The instance is saved as a separate model file.
- Choose **File > Save** on the menu bar. The entire model file is saved and the instance is saved through a higher level object.

Interface

None—Saves the accelerator file by saving the generic model and its Family Table.

Always—Saves the accelerator file when the instance itself is explicitly saved. This can be by opening an instance in a new window, and then saving the instance as a separate model file, or by saving the entire model file and the instance through a higher level object.

Explicit—The accelerator file is saved when the instance itself is explicitly saved, as described above.

Pro/ENGINEER Assembly CAD Edition Import

You can import and view Pro/ENGINEER Assembly (.asm) files using the import options delivered with the CAD Edition of Deep Exploration.

For further information on using files, please see Opening Files (on page 39), Importing Files (on page 40), and Saving Files (on page 55).

Support

- 2D vector data.
- Assembly hierarchy.
- Meshes.
- Parts data.
- Material and object names.
- Tessellation control.

Limitations

- Animation.
- BOM support based on part names.
- Configurations.
- Solids/NURBS.
- Textures.
- UV coordinates.

Interface

Common—Used to establish the common settings including tessellation (arrangement and density of the polygons) settings. Note that if you enter 0 (zero) for any of the tessellation settings, they are not taken into effect during the tessellation process.

Copyright © Right Hemisphere 2007. All Rights Reserved.

- **Surface deviation** (on page 42)—Determines the maximum distance allowed between original analytical surface and its tessellated representation. Triangle edges do not deviate from edges of the face by more than this amount. The units are expressed as unit size based on those used by the model. A smaller surface deviation produces more triangles for smoother models.
- **Normal deviation** (on page 42)—Determines the maximum angular deviation (in degrees) allowed between a analytical surface and its triangulation. Pairs of triangles do not incorporate a dihedral angle greater than this amount. For example, this setting dictates the minimum number of facets around a smaller circle or cylinder regardless of the Surface Deviation setting. This parameter gives you added control over faces with very small radii. Lower values result in finer tessellations, while higher values give coarser tessellations.
- **Import hidden objects**—Imports all hidden objects. If, after importing a file, you modify any visible objects that contain hidden sub-objects after import, those hidden objects are also modified.
- **Display hidden objects**—Displays all hidden objects in the viewport after importing the file.
- **Import sheet bodies**—Imports all construction geometry. Sheet bodies are flat surfaces from which each object is cut.

  Note: If a file contains sheet bodies, this option must be selected for the file to be imported correctly.

- **Import wireframes**—Imports all wireframes if any exist.
- **Unit**—Used to select the unit type for which you want to view its custom unit (scene unit) measurement in meters. For example, 1 custom unit = 0.01 meters.
  - **File default**—Imports the file using the file's units.
  - **Millimeters**—Imports the file in millimeters (mm).
  - **Centimeters**—Imports the file in centimeters (cm).
  - **Meters**—Imports the file in meters (m).
  - **Inches**—Imports the file in inches (in).
  - **Feet**—Imports the file in feet (ft).
- **Ignore material opacity**—Disregards any material transparency that may have been set in the original file via an external application. That is, all the objects appear opaque. For example, a material opacity of 30% for an object is ignored, and the object is displayed with 100% opacity.
- **Auto-correct view orientation**—Attempts to correct the file's original view orientation to align with Deep Exploration's view orientation.
- **Import PMI** (on page 220)—Imports any Product Manufacturing Information (PMI) within the file. The PMI data objects can be accessed from within the 3D Objects list. Note that you must have the 'Show Markups (on page 257)' command on to view PMI data in the viewport.

Geometry Transform (on page 41)—Used to transform (rotate, position, and scale) the scene along the X, Y, and Z axes.

- **Rotation**—Used to set the degrees of rotation around each axis from 0 to 360 degrees. The rotation values can be entered with up to 6 decimal places.
  - **X**—Rotates the scene along the X axis.
  - **Y**—Rotates the scene along the Y axis.
  - **Z**—Rotates the scene along the Z axis.
- **Position**—Used to set the position of the scene along the X, Y, and Z axes.
  - **X**—Positions the scene along the X axis.
  - **Y**—Positions the scene along the Y axis.

Copyright © Right Hemisphere 2007. All Rights Reserved.

  - o **Z**—Positions the scene along the Z axis.
- **Scale**—Used to scale the object along the X, Y, and Z axes.
  - o **X**—Scales the scene along the X axis.
  - o **Y**—Scales the scene along the Y axis.
  - o **Z**—Scales the scene along the Z axis.

Pro/ENGINEER Assembly Module Import

You can import and view Pro/ENGINEER Assembly (.asm) files using the import options delivered with the Standard Edition of Deep Exploration and the CoreCAD or Pro/E Module.

For further information on using files, please see Opening Files (on page 39), Importing Files (on page 40), and Saving Files (on page 55).

Support

- 2D vector data.
- Assembly hierarchy.
- Meshes.
- Parts data.
- Material and object names.
- Tessellation control.
- UV coordinates is supported when importing using the Legacy method.

Limitations

- Animation.
- BOM support based on part names.
- Configurations.
- Solids/NURBS.
- Textures.

Interface

Import Method—Used to establish the way in which to import the file.

- **Method**—The method in which the file is imported. Each method utilizes differing import options to import the file.
  - o **Method A**—Imports the file using Method A.
  - o **Legacy**—Imports the file using the Legacy method.

Method A—Used to establish the Method A settings.

- **Surface deviation** (on page 42)—Determines the maximum distance allowed between original analytical surface and its tessellated representation. Triangle edges do not deviate from edges of the face by more than this amount. The units are expressed as unit size based on those used by the model. A smaller surface deviation produces more triangles for smoother models.

Copyright © Right Hemisphere 2007. All Rights Reserved.

- **Normal deviation** (on page 42)—Determines the maximum angular deviation (in degrees) allowed between a analytical surface and its triangulation. Pairs of triangles do not incorporate a dihedral angle greater than this amount. For example, this setting dictates the minimum number of facets around a smaller circle or cylinder regardless of the Surface Deviation setting. This parameter gives you added control over faces with very small radii. Lower values result in finer tessellations, while higher values give coarser tessellations.
- **Import hidden objects**—Imports all hidden objects. If, after importing a file, you modify any visible objects that contain hidden sub-objects after import, those hidden objects are also modified.
- **Display hidden objects**—Displays hidden objects in the viewport after importing the file.
- **Import sheet bodies**—Imports all construction geometry. Sheet bodies are flat surfaces from which each object is cut.

  Note: If a file contains sheet bodies, this option must be selected for the file to be imported correctly.

- **Import wireframes**—Imports all wireframes if any exist.
- **Unit**—Used to select the unit type for which you want to view its custom unit (scene unit) measurement in meters. For example, 1 custom unit = 0.01 meters.
  - **File default**—Imports the file using the file's units.
  - **Millimeters**—Imports the file in millimeters (mm).
  - **Centimeters**—Imports the file in centimeters (cm).
  - **Meters**—Imports the file in meters (m).
  - **Inches**—Imports the file in inches (in).
  - **Feet**—Imports the file in feet (ft).
- **Ignore material opacity**—Disregards any material transparency that may have been set in the original file via an external application. That is, all the objects appear opaque. For example, a material opacity of 30% for an object is ignored, and the object is displayed with 100% opacity.
- **Auto-correct view orientation**—Attempts to correct the file's original view orientation to align with Deep Exploration's view orientation.
- **Import PMI** (on page 220)—Imports any Product Manufacturing Information (PMI) within the file. The PMI data objects can be accessed from within the 3D Objects list. Note that you must have the 'Show Markups (on page 257)' command on to view PMI data in the viewport.

Legacy—Used to establish the Legacy settings.

- **Default Tessellation** (on page 43)—Used to import the file using the default tessellation settings (arrangement and density of the polygons).

  Note: If you enter 0 (zero) for any of the tessellation settings, they are not taken into effect during the tessellation process.

  - **Tessellation** (on page 42)—Used to import the file using the level of tessellation.
    - **Very high**—Displays a very high resolution using the values directly from the file. You are able to set custom values to give you a higher tessellation if a file has a very high polygon count. Note that using this option reduces processing speed.
    - **High**—Displays a high resolution with a high number of polygons. That is, the planar tolerance is set to the tessellation tolerance.
    - **Medium**—Displays a medium resolution with a medium number of polygons. That is, the planar tolerance is set to the tessellation tolerance and both are multiplied by 10.
    - **Low**—Displays a low resolution with a low number of polygons. That is, the planar tolerance is set to the tessellation tolerance and both are multiplied by 100. This option increases processing speed.

Copyright © Right Hemisphere 2007. All Rights Reserved.

- **Custom Tessellation**—Used to customize the tessellation settings for all objects within the model. These settings are used when you triangulate (mesh) the faces/bodies of the model.

  Note: If you enter 0 (zero) for any of the tessellation settings, they are not taken into effect during the tessellation process.

  - **Angle tolerance** (on page 46)—The maximum angular deviation allowed between a face and its triangulation. Pairs of triangles do not incorporate a dihedral angle greater than this amount. This parameter gives a user added control over faces with very small radii. Lower values result in finer tessellations, while higher values give coarser tessellations.
  - **Planar tolerance** (on page 46)—The maximum distance allowed between a face and its triangulation for 3D solid objects. Triangle interiors do not deviate from the face interior by more than this amount.
  - **Tessellation tolerance** (on page 46)—The maximum distance allowed between an edge/curve and its tessellation. Triangle edges do not deviate from edges of the face by more than this amount, or by more than the maximum distance between the edge and the side of the facets along the edge when used in face triangulation.

    Tip: If you only want tessellation of edges/curves, enter values for the tessellation tolerance and angular tolerance.

    Note: Both planar and tessellation tolerance are considered in the units of the model being meshed. Therefore, they should be set to a similar value according to the model size to noticeably reduce the number of triangles generated. Model size/100 is a good starting point depending whether you want a fine or coarse mesh.

- **Display**—Used to display 2D vectors and 3D solids, or 3D solids only.
  - **2D vector and 3D solids**—Displays 2D vectors and 3D solids. Only the tessellation of 2D vectors is affected.
  - **3D solids**—Displays 3D solid objects only. As planar tolerance is for face triangulation of 3D solid objects only, this selection ensures planar tolerance affects the tessellation.
- **Tessellation** (on page 42)—Used to select the tessellation with which to import the file.
  - **Default**—Imports the file using the default tessellation settings.
  - **Custom**—Imports the file using the customized tessellation settings.

Geometry Transform (on page 41)—Used to transform (rotate, position, and scale) the scene along the X, Y, and Z axes.

- **Rotation**—Used to set the degrees of rotation around each axis from 0 to 360 degrees. The rotation values can be entered with up to 6 decimal places.
  - **X**—Rotates the scene along the X axis.
  - **Y**—Rotates the scene along the Y axis.
  - **Z**—Rotates the scene along the Z axis.
- **Position**—Used to set the position of the scene along the X, Y, and Z axes.
  - **X**—Positions the scene along the X axis.
  - **Y**—Positions the scene along the Y axis.
  - **Z**—Positions the scene along the Z axis.
- **Scale**—Used to scale the object along the X, Y, and Z axes.
  - **X**—Scales the scene along the X axis.
  - **Y**—Scales the scene along the Y axis.
  - **Z**—Scales the scene along the Z axis.

Copyright © Right Hemisphere 2007. All Rights Reserved.

Pro/ENGINEER Part Import (.prt*, .xpr)

You can import and view Pro/ENGINEER Part (.prt*, .xpr) files.

The import options differ depending on the version of Deep Exploration you have installed:

- Certain options are available with the CAD Edition of Deep Exploration.
- Certain options are available with the Standard Edition of Deep Exploration and the CoreCAD Module or Pro/E Module.

Note that support for the CAD format versions (on page 560) also differs depending on the version of Deep Exploration you have installed.

Import Rules

The following rules apply when importing Pro/E files:

- When a file is first opened with the Pro/E Module, a medium resolution is used by default for fast file loading, and a dialog displays these resolution settings.
- The latest version of any part file within the folder is always opened. For example, sprng.prt.3 is opened if the folder contains spring.prt.1, spring.prt.2 and spring.prt.3.
- Parts and sub-assemblies are added to the external files list.
- Sub-assembly hierarchy is added for all part files, if any.
- Pro/E searches through folders for part and assembly files and for corresponding accelerator files (on page 623):

1. The current directory of the file.
2. In the search paths specified in the CAD Modules tab (on page 285).

If a part, assembly or accelerator file is not found, a message is displayed next to the object in the Scene Components panel (on page 329) advising you of this.

Accelerator Files

You can reduce the time required to retrieve a part or assembly file by saving the file instance in an 'instance accelerator file' with the Pro/ENGINEER software (http://www.ptc.com/). Each instance is saved in its own unique accelerator file: part instance files are called instance[name].xpr and assembly instance files are called instance[name].xas.

Note that the following information relates to Pro/ENGINEER only.

Saving Parts and Assembly Instances

Saving instances of parts and assemblies is controlled by the Save Instance Accelerator variable. This variable can be modified in Pro/ENGINEER using one of two methods:

- By setting the configuration file option 'save_instance_accelerator'.
- By choosing Files > Instance Operations > Accelerator Options to open the Instance Accelerator dialog and establish the settings.

Copyright © Right Hemisphere 2007. All Rights Reserved.

Procedure

To save the accelerator file with the instance, do one of the following:

- Click **Open in the Family Table**, and then choose **File > Save** or **File > Save a Copy** on the menu bar. The instance is saved as a separate model file.
- Choose **File > Save** on the menu bar. The entire model file is saved and the instance is saved through a higher level object.

Interface

None—Saves the accelerator file by saving the generic model and its Family Table.

Always—Saves the accelerator file when the instance itself is explicitly saved. This can be by opening an instance in a new window, and then saving the instance as a separate model file, or by saving the entire model file and the instance through a higher level object.

Explicit—The accelerator file is saved when the instance itself is explicitly saved, as described above.

Pro/ENGINEER Part CAD Edition Import

You can import and view Pro/ENGINEER Part (.prt*, .xpr) files using the import options delivered with the CAD Edition of Deep Exploration.

For further information on using files, please see Opening Files (on page 39), Importing Files (on page 40), and Saving Files (on page 55).

Support

- 2D vector data.
- Assembly hierarchy.
- Meshes.
- Parts data.
- Material and object names.
- Tessellation control.

Limitations

- Animation.
- BOM support based on part names.
- Configurations.
- Solids/NURBS.
- Textures.
- UV coordinates.

Interface

Common—Used to establish the common settings including tessellation (arrangement and density of the polygons) settings. Note that if you enter 0 (zero) for any of the tessellation settings, they are not taken into effect during the tessellation process.

Copyright © Right Hemisphere 2007. All Rights Reserved.

- **Surface deviation** (on page 42)—Determines the maximum distance allowed between original analytical surface and its tessellated representation. Triangle edges do not deviate from edges of the face by more than this amount. The units are expressed as unit size based on those used by the model. A smaller surface deviation produces more triangles for smoother models.
- **Normal deviation** (on page 42)—Determines the maximum angular deviation (in degrees) allowed between a analytical surface and its triangulation. Pairs of triangles do not incorporate a dihedral angle greater than this amount. For example, this setting dictates the minimum number of facets around a smaller circle or cylinder regardless of the Surface Deviation setting. This parameter gives you added control over faces with very small radii. Lower values result in finer tessellations, while higher values give coarser tessellations.
- **Import hidden objects**—Imports all hidden objects. If, after importing a file, you modify any visible objects that contain hidden sub-objects after import, those hidden objects are also modified.
- **Display hidden objects**—Displays all hidden objects in the viewport after importing the file.
- **Import sheet bodies**—Imports all construction geometry. Sheet bodies are flat surfaces from which each object is cut.

  Note: If a file contains sheet bodies, this option must be selected for the file to be imported correctly.

- **Import wireframes**—Imports all wireframes if any exist.
- **Import Metadata**—Imports file metadata from original CAD file (stored inside RH file as 'CADMetadata' category).
- **Unit**—Used to select the unit type for which you want to view its custom unit (scene unit) measurement in meters. For example, 1 custom unit = 0.01 meters.
  - **File default**—Imports the file using the file's units.
  - **Millimeters**—Imports the file in millimeters (mm).
  - **Centimeters**—Imports the file in centimeters (cm).
  - **Meters**—Imports the file in meters (m).
  - **Inches**—Imports the file in inches (in).
  - **Feet**—Imports the file in feet (ft).
- **Ignore material opacity**—Disregards any material transparency that may have been set in the original file via an external application. That is, all the objects appear opaque. For example, a material opacity of 30% for an object is ignored, and the object is displayed with 100% opacity.
- **Auto-correct view orientation**—Attempts to correct the file's original view orientation to align with Deep Exploration's view orientation.
- **Import PMI** (on page 220)—Imports any Product Manufacturing Information (PMI) within the file. The PMI data objects can be accessed from within the 3D Objects list. Note that you must have the 'Show Markups (on page 257)' command on to view PMI data in the viewport.

Geometry Transform (on page 41)—Used to transform (rotate, position, and scale) the scene along the X, Y, and Z axes.

- **Rotation**—Used to set the degrees of rotation around each axis from 0 to 360 degrees. The rotation values can be entered with up to 6 decimal places.
  - **X**—Rotates the scene along the X axis.
  - **Y**—Rotates the scene along the Y axis.
  - **Z**—Rotates the scene along the Z axis.
- **Position**—Used to set the position of the scene along the X, Y, and Z axes.

Copyright © Right Hemisphere 2007. All Rights Reserved.

  - **X**—Positions the scene along the X axis.
  - **Y**—Positions the scene along the Y axis.
  - **Z**—Positions the scene along the Z axis.
- **Scale**—Used to scale the object along the X, Y, and Z axes.
  - **X**—Scales the scene along the X axis.
  - **Y**—Scales the scene along the Y axis.
  - **Z**—Scales the scene along the Z axis.

Pro/ENGINEER Part Module Import

You can import and view Pro/ENGINEER Part (.prt*, .xpr) files using the import options delivered with the Standard Edition of Deep Exploration and the CoreCAD or Pro/E Module.

For further information on using files, please see Opening Files (on page 39), Importing Files (on page 40), and Saving Files (on page 55).

Support

- 2D vector data.
- Assembly hierarchy.
- Meshes.
- Parts data.
- Material and object names.
- Tessellation control.
- UV coordinates is supported when importing using the Legacy method.

Limitations

- Animation.
- BOM support based on part names.
- Configurations.
- Solids/NURBS.
- Textures.

Interface

Method A—Used to establish the Method A settings.

- **Surface deviation** (on page 42)—Determines the maximum distance allowed between original analytical surface and its tessellated representation. Triangle edges do not deviate from edges of the face by more than this amount. The units are expressed as unit size based on those used by the model. A smaller surface deviation produces more triangles for smoother models.
- **Normal deviation** (on page 42)—Determines the maximum angular deviation (in degrees) allowed between a analytical surface and its triangulation. Pairs of triangles do not incorporate a dihedral angle greater than this amount. For example, this setting dictates the minimum number of facets around a smaller circle or cylinder regardless of the Surface Deviation setting. This parameter gives you added control over faces with very small radii. Lower values result in finer tessellations, while higher values give coarser tessellations.

Copyright © Right Hemisphere 2007. All Rights Reserved.

- **Import hidden objects**—Imports all hidden objects. If, after importing a file, you modify any visible objects that contain hidden sub-objects after import, those hidden objects are also modified.
- **Display hidden objects**—Displays all hidden objects in the viewport after importing the file.
- **Import sheet bodies**—Imports all construction geometry. Sheet bodies are flat surfaces from which each object is cut.

Note: If a file contains sheet bodies, this option must be selected for the file to be imported correctly.

- **Import wireframes**—Imports all wireframes if any exist.
- **Import Metadata**—Imports file metadata from original CAD file (stored inside RH file as 'CADMetadata' category).
- **Unit**—Used to select the unit type for which you want to view its custom unit (scene unit) measurement in meters. For example, 1 custom unit = 0.01 meters.
  - **File default**—Imports the file using the file's units.
  - **Millimeters**—Imports the file in millimeters (mm).
  - **Centimeters**—Imports the file in centimeters (cm).
  - **Meters**—Imports the file in meters (m).
  - **Inches**—Imports the file in inches (in).
  - **Feet**—Imports the file in feet (ft).
- **Ignore material opacity**—Disregards any material transparency that may have been set in the original file via an external application. That is, all the objects appear opaque. For example, a material opacity of 30% for an object is ignored, and the object is displayed with 100% opacity.
- **Auto-correct view orientation**—Attempts to correct the file's original view orientation to align with Deep Exploration's view orientation.
- **Import PMI** (on page 220)—Imports any Product Manufacturing Information (PMI) within the file. The PMI data objects can be accessed from within the 3D Objects list. Note that you must have the 'Show Markups (on page 257)' command on to view PMI data in the viewport.

Legacy—Used to establish the Legacy settings.

- **Default Tessellation** (on page 43)—Used to import the file using the default tessellation settings (arrangement and density of the polygons).

Note: If you enter 0 (zero) for any of the tessellation settings, they are not taken into effect during the tessellation process.

  - **Tessellation** (on page 42)—Used to import the file using the level of tessellation.
    - **Very high**—Displays a very high resolution using the values directly from the file. You are able to set custom values to give you a higher tessellation if a file has a very high polygon count. Note that using this option reduces processing speed.
    - **High**—Displays a high resolution with a high number of polygons. That is, the planar tolerance is set to the tessellation tolerance.
    - **Medium**—Displays a medium resolution with a medium number of polygons. That is, the planar tolerance is set to the tessellation tolerance and both are multiplied by 10.
    - **Low**—Displays a low resolution with a low number of polygons. That is, the planar tolerance is set to the tessellation tolerance and both are multiplied by 100. This option increases processing speed.
- **Custom Tessellation**—Used to customize the tessellation settings for all objects within the model. These settings are used when you triangulate (mesh) the faces/bodies of the model.

Copyright © Right Hemisphere 2007. All Rights Reserved.

Note: If you enter 0 (zero) for any of the tessellation settings, they are not taken into effect during the tessellation process.

- **Angle tolerance** (on page 46)—The maximum angular deviation allowed between a face and its triangulation. Pairs of triangles do not incorporate a dihedral angle greater than this amount. This parameter gives a user added control over faces with very small radii. Lower values result in finer tessellations, while higher values give coarser tessellations.
- **Planar tolerance** (on page 46)—The maximum distance allowed between a face and its triangulation for 3D solid objects. Triangle interiors do not deviate from the face interior by more than this amount.
- **Tessellation tolerance** (on page 46)—The maximum distance allowed between an edge/curve and its tessellation. Triangle edges do not deviate from edges of the face by more than this amount, or by more than the maximum distance between the edge and the side of the facets along the edge when used in face triangulation.

Tip: If you only want tessellation of edges/curves, enter values for the tessellation tolerance and angular tolerance.

Note: Both planar and tessellation tolerance are considered in the units of the model being meshed. Therefore, they should be set to a similar value according to the model size to noticeably reduce the number of triangles generated. Model size/100 is a good starting point depending whether you want a fine or coarse mesh.

- **Display**—Used to display 2D vectors and 3D solids, or 3D solids only.
  - **2D vector and 3D solids**—Displays 2D vectors and 3D solids. Only the tessellation of 2D vectors is affected.
  - **3D solids**—Displays 3D solid objects only. As planar tolerance is for face triangulation of 3D solid objects only, this selection ensures planar tolerance affects the tessellation.
- **Tessellation** (on page 42)—Used to select the tessellation with which to import the file.
  - **Default**—Imports the file using the default tessellation settings.
  - **Custom**—Imports the file using the customized tessellation settings.

Geometry Transform (on page 41)—Used to transform (rotate, position, and scale) the scene along the X, Y, and Z axes.

- **Rotation**—Used to set the degrees of rotation around each axis from 0 to 360 degrees. The rotation values can be entered with up to 6 decimal places.
  - **X**—Rotates the scene along the X axis.
  - **Y**—Rotates the scene along the Y axis.
  - **Z**—Rotates the scene along the Z axis.
- **Position**—Used to set the position of the scene along the X, Y, and Z axes.
  - **X**—Positions the scene along the X axis.
  - **Y**—Positions the scene along the Y axis.
  - **Z**—Positions the scene along the Z axis.
- **Scale**—Used to scale the object along the X, Y, and Z axes.
  - **X**—Scales the scene along the X axis.
  - **Y**—Scales the scene along the Y axis.
  - **Z**—Scales the scene along the Z axis.

Copyright © Right Hemisphere 2007. All Rights Reserved.

SDRC I-DEAS Model Import (.arc, .mf1)

You can import and view Structural Dynamics Research Corporation (SDRC) I-DEAS Model (.arc, .mf1) files.

For further information on using files, please see Opening Files (on page 39), Importing Files (on page 40), and Saving Files (on page 55).

Support

- 'Active bin' configuration.
- Assembly hierarchy.
- BOM support based on part names.
- Meshes.
- Parts data.
- Material and object names.
- Tessellation control.

Limitations

- 2D vector data.
- Animation.
- Parts data.
- Solids/NURBS.
- Textures.
- UV coordinates.

Interface

Common—Used to establish the common settings including tessellation (arrangement and density of the polygons) settings. Note that if you enter 0 (zero) for any of the tessellation settings, they are not taken into effect during the tessellation process.

- **Surface deviation** (on page 42)—Determines the maximum distance allowed between original analytical surface and its tessellated representation. Triangle edges do not deviate from edges of the face by more than this amount. The units are expressed as unit size based on those used by the model. A smaller surface deviation produces more triangles for smoother models.
- **Normal deviation** (on page 42)—Determines the maximum angular deviation (in degrees) allowed between a analytical surface and its triangulation. Pairs of triangles do not incorporate a dihedral angle greater than this amount. For example, this setting dictates the minimum number of facets around a smaller circle or cylinder regardless of the Surface Deviation setting. This parameter gives you added control over faces with very small radii. Lower values result in finer tessellations, while higher values give coarser tessellations.
- **Import hidden objects**—Imports all hidden objects. If, after importing a file, you modify any visible objects that contain hidden sub-objects after import, those hidden objects are also modified.
- **Display hidden objects**—Displays all hidden objects in the viewport after importing the file.
- **Import sheet bodies**—Imports all construction geometry. Sheet bodies are flat surfaces from which each object is cut.

Note: If a file contains sheet bodies, this option must be selected for the file to be imported correctly.

Copyright © Right Hemisphere 2007. All Rights Reserved.

- **Import wireframes**—Imports all wireframes if any exist.
- **Unit**—Used to select the unit type for which you want to view its custom unit (scene unit) measurement in meters. For example, 1 custom unit = 0.01 meters.
  - **File default**—Imports the file using the file's units.
  - **Millimeters**—Imports the file in millimeters (mm).
  - **Centimeters**—Imports the file in centimeters (cm).
  - **Meters**—Imports the file in meters (m).
  - **Inches**—Imports the file in inches (in).
  - **Feet**—Imports the file in feet (ft).
- **Ignore material opacity**—Disregards any material transparency that may have been set in the original file via an external application. That is, all the objects appear opaque. For example, a material opacity of 30% for an object is ignored, and the object is displayed with 100% opacity.
- **Auto-correct view orientation**—Attempts to correct the file's original view orientation to align with Deep Exploration's view orientation.
- **Import PMI** (on page 220)—Imports any Product Manufacturing Information (PMI) within the file. The PMI data objects can be accessed from within the 3D Objects list. Note that you must have the 'Show Markups (on page 257)' command on to view PMI data in the viewport.

Geometry Transform (on page 41)—Used to transform (rotate, position, and scale) the scene along the X, Y, and Z axes.

- **Rotation**—Used to set the degrees of rotation around each axis from 0 to 360 degrees. The rotation values can be entered with up to 6 decimal places.
  - **X**—Rotates the scene along the X axis.
  - **Y**—Rotates the scene along the Y axis.
  - **Z**—Rotates the scene along the Z axis.
- **Position**—Used to set the position of the scene along the X, Y, and Z axes.
  - **X**—Positions the scene along the X axis.
  - **Y**—Positions the scene along the Y axis.
  - **Z**—Positions the scene along the Z axis.
- **Scale**—Used to scale the object along the X, Y, and Z axes.
  - **X**—Scales the scene along the X axis.
  - **Y**—Scales the scene along the Y axis.
  - **Z**—Scales the scene along the Z axis.

Copyright © Right Hemisphere 2007. All Rights Reserved.

SDRC I-DEAS Package Import (.pkg)

You can import and view Structural Dynamics Research Corporation (SDRC) I-DEAS Package (.pkg) files.

For further information on using files, please see Opening Files (on page 39), Importing Files (on page 40), and Saving Files (on page 55).

Support

- 0th element in configuration.
- 'Active bin' configuration.
- Assembly hierarchy.
- BOM support based on part names.
- Meshes.
- Parts data.
- Material and object names.
- Tessellation control.

Limitations

- 2D vector data.
- Animation.
- Parts data.
- Solids/NURBS.
- Textures.
- UV coordinates.

Interface

Common—Used to establish the common settings including tessellation (arrangement and density of the polygons) settings. Note that if you enter 0 (zero) for any of the tessellation settings, they are not taken into effect during the tessellation process.

- **Surface deviation** (on page 42)—Determines the maximum distance allowed between original analytical surface and its tessellated representation. Triangle edges do not deviate from edges of the face by more than this amount. The units are expressed as unit size based on those used by the model. A smaller surface deviation produces more triangles for smoother models.
- **Normal deviation** (on page 42)—Determines the maximum angular deviation (in degrees) allowed between a analytical surface and its triangulation. Pairs of triangles do not incorporate a dihedral angle greater than this amount. For example, this setting dictates the minimum number of facets around a smaller circle or cylinder regardless of the Surface Deviation setting. This parameter gives you added control over faces with very small radii. Lower values result in finer tessellations, while higher values give coarser tessellations.
- **Import hidden objects**—Imports all hidden objects. If, after importing a file, you modify any visible objects that contain hidden sub-objects after import, those hidden objects are also modified.
- **Display hidden objects**—Displays all hidden objects in the viewport after importing the file.
- **Import sheet bodies**—Imports all construction geometry. Sheet bodies are flat surfaces from which each object is cut.

Copyright © Right Hemisphere 2007. All Rights Reserved.

Note: If a file contains sheet bodies, this option must be selected for the file to be imported correctly.

- **Import wireframes**—Imports all wireframes if any exist.
- **Unit**—Used to select the unit type for which you want to view its custom unit (scene unit) measurement in meters. For example, 1 custom unit = 0.01 meters.
  - **File default**—Imports the file using the file's units.
  - **Millimeters**—Imports the file in millimeters (mm).
  - **Centimeters**—Imports the file in centimeters (cm).
  - **Meters**—Imports the file in meters (m).
  - **Inches**—Imports the file in inches (in).
  - **Feet**—Imports the file in feet (ft).
- **Ignore material opacity**—Disregards any material transparency that may have been set in the original file via an external application. That is, all the objects appear opaque. For example, a material opacity of 30% for an object is ignored, and the object is displayed with 100% opacity.
- **Auto-correct view orientation**—Attempts to correct the file's original view orientation to align with Deep Exploration's view orientation.
- **Import PMI** (on page 220)—Imports any Product Manufacturing Information (PMI) within the file. The PMI data objects can be accessed from within the 3D Objects list. Note that you must have the 'Show Markups (on page 257)' command on to view PMI data in the viewport.

Geometry Transform (on page 41)—Used to transform (rotate, position, and scale) the scene along the X, Y, and Z axes.

- **Rotation**—Used to set the degrees of rotation around each axis from 0 to 360 degrees. The rotation values can be entered with up to 6 decimal places.
  - **X**—Rotates the scene along the X axis.
  - **Y**—Rotates the scene along the Y axis.
  - **Z**—Rotates the scene along the Z axis.
- **Position**—Used to set the position of the scene along the X, Y, and Z axes.
  - **X**—Positions the scene along the X axis.
  - **Y**—Positions the scene along the Y axis.
  - **Z**—Positions the scene along the Z axis.
- **Scale**—Used to scale the object along the X, Y, and Z axes.
  - **X**—Scales the scene along the X axis.
  - **Y**—Scales the scene along the Y axis.
  - **Z**—Scales the scene along the Z axis.

Copyright © Right Hemisphere 2007. All Rights Reserved.

SDRC I-DEAS Universal Import (.unv)

You can import and view Structural Dynamics Research Corporation (SDRC) I-DEAS Universal (.unv) files.

For further information on using files, please see Opening Files (on page 39), Importing Files (on page 40), and Saving Files (on page 55).

Support

- 'Active bin' configuration.
- Assembly hierarchy.
- BOM support based on part names.
- Meshes.
- Parts data.
- Material and object names.
- Tessellation control.

Limitations

- 2D vector data.
- Animation.
- Parts data.
- Solids/NURBS.
- Textures.
- UV coordinates.

Interface

Common—Used to establish the common settings including tessellation (arrangement and density of the polygons) settings. Note that if you enter 0 (zero) for any of the tessellation settings, they are not taken into effect during the tessellation process.

- **Surface deviation** (on page 42)—Determines the maximum distance allowed between original analytical surface and its tessellated representation. Triangle edges do not deviate from edges of the face by more than this amount. The units are expressed as unit size based on those used by the model. A smaller surface deviation produces more triangles for smoother models.
- **Normal deviation** (on page 42)—Determines the maximum angular deviation (in degrees) allowed between a analytical surface and its triangulation. Pairs of triangles do not incorporate a dihedral angle greater than this amount. For example, this setting dictates the minimum number of facets around a smaller circle or cylinder regardless of the Surface Deviation setting. This parameter gives you added control over faces with very small radii. Lower values result in finer tessellations, while higher values give coarser tessellations.
- **Import hidden objects**—Imports all hidden objects. If, after importing a file, you modify any visible objects that contain hidden sub-objects after import, those hidden objects are also modified.
- **Display hidden objects**—Displays all hidden objects in the viewport after importing the file.
- **Import sheet bodies**—Imports all construction geometry. Sheet bodies are flat surfaces from which each object is cut.

Note: If a file contains sheet bodies, this option must be selected for the file to be imported correctly.

Copyright © Right Hemisphere 2007. All Rights Reserved.

- **Import wireframes**—Imports all wireframes if any exist.
- **Unit**—Used to select the unit type for which you want to view its custom unit (scene unit) measurement in meters. For example, 1 custom unit = 0.01 meters.
  - **File default**—Imports the file using the file's units.
  - **Millimeters**—Imports the file in millimeters (mm).
  - **Centimeters**—Imports the file in centimeters (cm).
  - **Meters**—Imports the file in meters (m).
  - **Inches**—Imports the file in inches (in).
  - **Feet**—Imports the file in feet (ft).
- **Ignore material opacity**—Disregards any material transparency that may have been set in the original file via an external application. That is, all the objects appear opaque. For example, a material opacity of 30% for an object is ignored, and the object is displayed with 100% opacity.
- **Auto-correct view orientation**—Attempts to correct the file's original view orientation to align with Deep Exploration's view orientation.
- **Import PMI** (on page 220)—Imports any Product Manufacturing Information (PMI) within the file. The PMI data objects can be accessed from within the 3D Objects list. Note that you must have the 'Show Markups (on page 257)' command on to view PMI data in the viewport.

Geometry Transform (on page 41)—Used to transform (rotate, position, and scale) the scene along the X, Y, and Z axes.

- **Rotation**—Used to set the degrees of rotation around each axis from 0 to 360 degrees. The rotation values can be entered with up to 6 decimal places.
  - **X**—Rotates the scene along the X axis.
  - **Y**—Rotates the scene along the Y axis.
  - **Z**—Rotates the scene along the Z axis.
- **Position**—Used to set the position of the scene along the X, Y, and Z axes.
  - **X**—Positions the scene along the X axis.
  - **Y**—Positions the scene along the Y axis.
  - **Z**—Positions the scene along the Z axis.
- **Scale**—Used to scale the object along the X, Y, and Z axes.
  - **X**—Scales the scene along the X axis.
  - **Y**—Scales the scene along the Y axis.
  - **Z**—Scales the scene along the Z axis.

Copyright © Right Hemisphere 2007. All Rights Reserved.

SolidEdge 3D CAD Model Part Import (.par)

You can import and view SolidEdge 3D CAD Model Part (.par) files.

For further information on using files, please see Opening Files (on page 39), Importing Files (on page 40), and Saving Files (on page 55).

Support

- Assembly hierarchy.
- Meshes.
- Parts data.
- Material and object names.

Limitations

- 2D vector data.
- Animation.
- BOM support based on part names.
- Configurations.
- Solids/NURBS.
- Tessellation control.
- Textures.
- UV coordinates.

Interface

Common—Used to establish the common settings including tessellation (arrangement and density of the polygons) settings. Note that if you enter 0 (zero) for any of the tessellation settings, they are not taken into effect during the tessellation process.

- **Surface deviation** (on page 42)—Determines the maximum distance allowed between original analytical surface and its tessellated representation. Triangle edges do not deviate from edges of the face by more than this amount. The units are expressed as unit size based on those used by the model. A smaller surface deviation produces more triangles for smoother models.
- **Normal deviation** (on page 42)—Determines the maximum angular deviation (in degrees) allowed between a analytical surface and its triangulation. Pairs of triangles do not incorporate a dihedral angle greater than this amount. For example, this setting dictates the minimum number of facets around a smaller circle or cylinder regardless of the Surface Deviation setting. This parameter gives you added control over faces with very small radii. Lower values result in finer tessellations, while higher values give coarser tessellations.
- **Import hidden objects**—Imports all hidden objects. If, after importing a file, you modify any visible objects that contain hidden sub-objects after import, those hidden objects are also modified.
- **Display hidden objects**—Displays all hidden objects in the viewport after importing the file.
- **Import sheet bodies**—Imports all construction geometry. Sheet bodies are flat surfaces from which each object is cut.

  Note: If a file contains sheet bodies, this option must be selected for the file to be imported correctly.

- **Import wireframes**—Imports all wireframes if any exist.

Copyright © Right Hemisphere 2007. All Rights Reserved.

- **Unit**—Used to select the unit type for which you want to view its custom unit (scene unit) measurement in meters. For example, 1 custom unit = 0.01 meters.
  - **File default**—Imports the file using the file's units.
  - **Millimeters**—Imports the file in millimeters (mm).
  - **Centimeters**—Imports the file in centimeters (cm).
  - **Meters**—Imports the file in meters (m).
  - **Inches**—Imports the file in inches (in).
  - **Feet**—Imports the file in feet (ft).
- **Ignore material opacity**—Disregards any material transparency that may have been set in the original file via an external application. That is, all the objects appear opaque. For example, a material opacity of 30% for an object is ignored, and the object is displayed with 100% opacity.
- **Auto-correct view orientation**—Attempts to correct the file's original view orientation to align with Deep Exploration's view orientation.
- **Import PMI** (on page 220)—Imports any Product Manufacturing Information (PMI) within the file. The PMI data objects can be accessed from within the 3D Objects list. Note that you must have the 'Show Markups (on page 257)' command on to view PMI data in the viewport.

Geometry Transform (on page 41)—Used to transform (rotate, position, and scale) the scene along the X, Y, and Z axes.

- **Rotation**—Used to set the degrees of rotation around each axis from 0 to 360 degrees. The rotation values can be entered with up to 6 decimal places.
  - **X**—Rotates the scene along the X axis.
  - **Y**—Rotates the scene along the Y axis.
  - **Z**—Rotates the scene along the Z axis.
- **Position**—Used to set the position of the scene along the X, Y, and Z axes.
  - **X**—Positions the scene along the X axis.
  - **Y**—Positions the scene along the Y axis.
  - **Z**—Positions the scene along the Z axis.
- **Scale**—Used to scale the object along the X, Y, and Z axes.
  - **X**—Scales the scene along the X axis.
  - **Y**—Scales the scene along the Y axis.
  - **Z**—Scales the scene along the Z axis.

Copyright © Right Hemisphere 2007. All Rights Reserved.

SolidWorks Assembly and Part Import (.sldasm, .sldlfp, .sldprt)

You can import and view SolidWorks Assembly (.sldasm) and Part (.sldlfp, .sldprt) files.

The .sldasm format displays list assembly data, and the .sldlfp and .sldprt formats display list part data.

For further information on using files, please see Opening Files (on page 39), Importing Files (on page 40), and Saving Files (on page 55).

Support

- Assembly hierarchy.
- Meshes.
- Parts data.
- Material and object names.

Limitations

- 2D vector data.
- Animation.
- BOM support based on part names.
- Configurations.
- Solids/NURBS.
- Tessellation control.
- Textures.
- UV coordinates.

Interface

Common—Used to establish the common settings including tessellation (arrangement and density of the polygons) settings. Note that if you enter 0 (zero) for any of the tessellation settings, they are not taken into effect during the tessellation process.

- **Surface deviation** (on page 42)—Determines the maximum distance allowed between original analytical surface and its tessellated representation. Triangle edges do not deviate from edges of the face by more than this amount. The units are expressed as unit size based on those used by the model. A smaller surface deviation produces more triangles for smoother models.
- **Normal deviation** (on page 42)—Determines the maximum angular deviation (in degrees) allowed between a analytical surface and its triangulation. Pairs of triangles do not incorporate a dihedral angle greater than this amount. For example, this setting dictates the minimum number of facets around a smaller circle or cylinder regardless of the Surface Deviation setting. This parameter gives you added control over faces with very small radii. Lower values result in finer tessellations, while higher values give coarser tessellations.
- **Import hidden objects**—Imports all hidden objects. If, after importing a file, you modify any visible objects that contain hidden sub-objects after import, those hidden objects are also modified.
- **Display hidden objects**—Displays all hidden objects in the viewport after importing the file.
- **Import sheet bodies**—Imports all construction geometry. Sheet bodies are flat surfaces from which each object is cut.

Note: If a file contains sheet bodies, this option must be selected for the file to be imported correctly.

Copyright © Right Hemisphere 2007. All Rights Reserved.

- **Import wireframes**—Imports all wireframes if any exist.
- **Unit**—Used to select the unit type for which you want to view its custom unit (scene unit) measurement in meters. For example, 1 custom unit = 0.01 meters.
  - **File default**—Imports the file using the file's units.
  - **Millimeters**—Imports the file in millimeters (mm).
  - **Centimeters**—Imports the file in centimeters (cm).
  - **Meters**—Imports the file in meters (m).
  - **Inches**—Imports the file in inches (in).
  - **Feet**—Imports the file in feet (ft).
- **Ignore material opacity**—Disregards any material transparency that may have been set in the original file via an external application. That is, all the objects appear opaque. For example, a material opacity of 30% for an object is ignored, and the object is displayed with 100% opacity.
- **Auto-correct view orientation**—Attempts to correct the file's original view orientation to align with Deep Exploration's view orientation.
- **Import PMI** (on page 220)—Imports any Product Manufacturing Information (PMI) within the file. The PMI data objects can be accessed from within the 3D Objects list. Note that you must have the 'Show Markups (on page 257)' command on to view PMI data in the viewport.

Import Method—Used to establish the way in which to import the file.

- **Method**—The method in which the file is imported. Each method utilizes differing import options to import the file.
  - **Method A**—Imports the file using Method A.
  - **Legacy**—Imports the file using the Legacy method.

Geometry Transform (on page 41)—Used to transform (rotate, position, and scale) the scene along the X, Y, and Z axes.

- **Rotation**—Used to set the degrees of rotation around each axis from 0 to 360 degrees. The rotation values can be entered with up to 6 decimal places.
  - **X**—Rotates the scene along the X axis.
  - **Y**—Rotates the scene along the Y axis.
  - **Z**—Rotates the scene along the Z axis.
- **Position**—Used to set the position of the scene along the X, Y, and Z axes.
  - **X**—Positions the scene along the X axis.
  - **Y**—Positions the scene along the Y axis.
  - **Z**—Positions the scene along the Z axis.
- **Scale**—Used to scale the object along the X, Y, and Z axes.
  - **X**—Scales the scene along the X axis.
  - **Y**—Scales the scene along the Y axis.
  - **Z**—Scales the scene along the Z axis.

Copyright © Right Hemisphere 2007. All Rights Reserved.

SolidWorks Drawing (.slddrw)

You can view SolidWorks Drawing (.slddrw) files.

The .slddrw format displays 2D drawing data.

For further information on using files, please see Opening Files (on page 39), Importing Files (on page 40), and Saving Files (on page 55).

Support

- Assembly hierarchy.
- Meshes.
- Parts data.
- Material and object names.

Limitations

- 2D vector data.
- Animation.
- BOM support based on part names.
- Configurations.
- Solids/NURBS.
- Tessellation control.
- Textures.
- UV coordinates.

Interface

Common—Used to establish the common settings including tessellation (arrangement and density of the polygons) settings. Note that if you enter 0 (zero) for any of the tessellation settings, they are not taken into effect during the tessellation process.

- **Surface deviation** (on page 42)—Determines the maximum distance allowed between original analytical surface and its tessellated representation. Triangle edges do not deviate from edges of the face by more than this amount. The units are expressed as unit size based on those used by the model. A smaller surface deviation produces more triangles for smoother models.
- **Normal deviation** (on page 42)—Determines the maximum angular deviation (in degrees) allowed between a analytical surface and its triangulation. Pairs of triangles do not incorporate a dihedral angle greater than this amount. For example, this setting dictates the minimum number of facets around a smaller circle or cylinder regardless of the Surface Deviation setting. This parameter gives you added control over faces with very small radii. Lower values result in finer tessellations, while higher values give coarser tessellations.
- **Import hidden objects**—Imports all hidden objects. If, after importing a file, you modify any visible objects that contain hidden sub-objects after import, those hidden objects are also modified.
- **Display hidden objects**—Displays all hidden objects in the viewport after importing the file.
- **Import sheet bodies**—Imports all construction geometry. Sheet bodies are flat surfaces from which each object is cut.

Note: If a file contains sheet bodies, this option must be selected for the file to be imported correctly.

Copyright © Right Hemisphere 2007. All Rights Reserved.

- **Import wireframes**—Imports all wireframes if any exist.
- **Unit**—Used to select the unit type for which you want to view its custom unit (scene unit) measurement in meters. For example, 1 custom unit = 0.01 meters.
  - **File default**—Imports the file using the file's units.
  - **Millimeters**—Imports the file in millimeters (mm).
  - **Centimeters**—Imports the file in centimeters (cm).
  - **Meters**—Imports the file in meters (m).
  - **Inches**—Imports the file in inches (in).
  - **Feet**—Imports the file in feet (ft).
- **Ignore material opacity**—Disregards any material transparency that may have been set in the original file via an external application. That is, all the objects appear opaque. For example, a material opacity of 30% for an object is ignored, and the object is displayed with 100% opacity.
- **Auto-correct view orientation**—Attempts to correct the file's original view orientation to align with Deep Exploration's view orientation.
- **Import PMI** (on page 220)—Imports any Product Manufacturing Information (PMI) within the file. The PMI data objects can be accessed from within the 3D Objects list. Note that you must have the 'Show Markups (on page 257)' command on to view PMI data in the viewport.

Import Method—Used to establish the way in which to import the file.

- **Method**—The method in which the file is imported. Each method utilizes differing import options to import the file.
  - **Method A**—Imports the file using Method A.
  - **Legacy**—Imports the file using the Legacy method.

Geometry Transform (on page 41)—Used to transform (rotate, position, and scale) the scene along the X, Y, and Z axes.

- **Rotation**—Used to set the degrees of rotation around each axis from 0 to 360 degrees. The rotation values can be entered with up to 6 decimal places.
  - **X**—Rotates the scene along the X axis.
  - **Y**—Rotates the scene along the Y axis.
  - **Z**—Rotates the scene along the Z axis.
- **Position**—Used to set the position of the scene along the X, Y, and Z axes.
  - **X**—Positions the scene along the X axis.
  - **Y**—Positions the scene along the Y axis.
  - **Z**—Positions the scene along the Z axis.
- **Scale**—Used to scale the object along the X, Y, and Z axes.
  - **X**—Scales the scene along the X axis.
  - **Y**—Scales the scene along the Y axis.
  - **Z**—Scales the scene along the Z axis.

Copyright © Right Hemisphere 2007. All Rights Reserved.

Standard ACIS Text Import (.sat)

You can import and view Standard ACIS Text (.sat) files.

The .sat file format (SAT) is the published format of ACIS by Spatial Technology. The SAT-format is used by different CAD/CAM-applications such as CADKEY, AutoCAD, and IronCAD.

The import options differ depending on the version of Deep Exploration you have installed:

- Certain options are available with the CAD Edition of Deep Exploration.
- Certain options are available with the Standard Edition of Deep Exploration and the CoreCAD Module or Pro/E Module.

Note that support for the CAD format versions (on page 560) also differs depending on the version of Deep Exploration you have installed.

Import Rules

The following rules apply when importing Pro/E files:

- When a file is first opened with the Pro/E Module, a medium resolution is used by default for fast file loading, and a dialog displays these resolution settings.
- The latest version of any part file within the folder is always opened. For example, sprng.prt.3 is opened if the folder contains spring.prt.1, spring.prt.2 and spring.prt.3.
- Parts and sub-assemblies are added to the external files list.
- Sub-assembly hierarchy is added for all part files, if any.
- Pro/E searches through folders for part and assembly files and for corresponding accelerator files (on page 623):

1. The current directory of the file.
2. In the search paths specified in the CAD Modules tab (on page 285).

If a part, assembly or accelerator file is not found, a message is displayed next to the object in the Scene Components panel (on page 329) advising you of this.

Standard ACIS Text CAD Edition Import

You can import and view Standard ACIS Text (.sat) files using the import options delivered with the CAD Edition of Deep Exploration.

For further information on using files, please see Opening Files (on page 39), Importing Files (on page 40), and Saving Files (on page 55).

Support

- Assembly hierarchy.
- Meshes.
- Parts data.
- Material and object names.

Limitations

- 2D vector data.
- Animation.
- BOM support based on part names.

Copyright © Right Hemisphere 2007. All Rights Reserved.

- Configurations.
- Solids/NURBS.
- Tessellation control.
- Textures.
- UV coordinates.

Interface

Common—Used to establish the common settings including tessellation (arrangement and density of the polygons) settings. Note that if you enter 0 (zero) for any of the tessellation settings, they are not taken into effect during the tessellation process.

- **Surface deviation** (on page 42)—Determines the maximum distance allowed between original analytical surface and its tessellated representation. Triangle edges do not deviate from edges of the face by more than this amount. The units are expressed as unit size based on those used by the model. A smaller surface deviation produces more triangles for smoother models.
- **Normal deviation** (on page 42)—Determines the maximum angular deviation (in degrees) allowed between a analytical surface and its triangulation. Pairs of triangles do not incorporate a dihedral angle greater than this amount. For example, this setting dictates the minimum number of facets around a smaller circle or cylinder regardless of the Surface Deviation setting. This parameter gives you added control over faces with very small radii. Lower values result in finer tessellations, while higher values give coarser tessellations.
- **Import hidden objects**—Imports all hidden objects. If, after importing a file, you modify any visible objects that contain hidden sub-objects after import, those hidden objects are also modified.
- **Display hidden objects**—Displays all hidden objects in the viewport after importing the file.
- **Import sheet bodies**—Imports all construction geometry. Sheet bodies are flat surfaces from which each object is cut.

  Note: If a file contains sheet bodies, this option must be selected for the file to be imported correctly.

- **Import wireframes**—Imports all wireframes if any exist.
- **Unit**—Used to select the unit type for which you want to view its custom unit (scene unit) measurement in meters. For example, 1 custom unit = 0.01 meters.
  - **File default**—Imports the file using the file's units.
  - **Millimeters**—Imports the file in millimeters (mm).
  - **Centimeters**—Imports the file in centimeters (cm).
  - **Meters**—Imports the file in meters (m).
  - **Inches**—Imports the file in inches (in).
  - **Feet**—Imports the file in feet (ft).
- **Ignore material opacity**—Disregards any material transparency that may have been set in the original file via an external application. That is, all the objects appear opaque. For example, a material opacity of 30% for an object is ignored, and the object is displayed with 100% opacity.
- **Auto-correct view orientation**—Attempts to correct the file's original view orientation to align with Deep Exploration's view orientation.

Geometry Transform (on page 41)—Used to transform (rotate, position, and scale) the scene along the X, Y, and Z axes.

Copyright © Right Hemisphere 2007. All Rights Reserved.

- **Rotation**—Used to set the degrees of rotation around each axis from 0 to 360 degrees. The rotation values can be entered with up to 6 decimal places.
  - **X**—Rotates the scene along the X axis.
  - **Y**—Rotates the scene along the Y axis.
  - **Z**—Rotates the scene along the Z axis.
- **Position**—Used to set the position of the scene along the X, Y, and Z axes.
  - **X**—Positions the scene along the X axis.
  - **Y**—Positions the scene along the Y axis.
  - **Z**—Positions the scene along the Z axis.
- **Scale**—Used to scale the object along the X, Y, and Z axes.
  - **X**—Scales the scene along the X axis.
  - **Y**—Scales the scene along the Y axis.
  - **Z**—Scales the scene along the Z axis.

Standard ACIS Text Module Import

You can import and view Standard ACIS Text (.sat) files using the import options delivered with the Standard Edition of Deep Exploration and the CoreCAD or Pro/E Module.

For further information on using files, please see Opening Files (on page 39), Importing Files (on page 40), and Saving Files (on page 55).

Support

- 2D vector data when importing with the Pro/E Module.
- Assembly hierarchy.
- Meshes.
- Parts data.
- Material and object names.
- Tessellation control is supported when importing using Method A.
- UV coordinates are supported when importing with the Pro/E Module using the Legacy method.

Limitations

- Animation.
- BOM support based on part names.
- Configurations.
- Solids/NURBS.
- Textures.

Interface

Import Method—Used to establish the way in which to import the file.

- **Method**—The method in which the file is imported. Each method utilizes differing import options to import the file.
  - **Method A**—Imports the file using Method A.

Copyright © Right Hemisphere 2007. All Rights Reserved.

  - **Legacy**—Imports the file using the Legacy method.

Method A—Used to establish the Method A settings.

- **Surface deviation** (on page 42)—Determines the maximum distance allowed between original analytical surface and its tessellated representation. Triangle edges do not deviate from edges of the face by more than this amount. The units are expressed as unit size based on those used by the model. A smaller surface deviation produces more triangles for smoother models.
- **Normal deviation** (on page 42)—Determines the maximum angular deviation (in degrees) allowed between a analytical surface and its triangulation. Pairs of triangles do not incorporate a dihedral angle greater than this amount. For example, this setting dictates the minimum number of facets around a smaller circle or cylinder regardless of the Surface Deviation setting. This parameter gives you added control over faces with very small radii. Lower values result in finer tessellations, while higher values give coarser tessellations.
- **Import hidden objects**—Imports all hidden objects. If, after importing a file, you modify any visible objects that contain hidden sub-objects after import, those hidden objects are also modified.
- **Display hidden objects**—Displays all hidden objects in the viewport after importing the file.
- **Import sheet bodies**—Imports all construction geometry. Sheet bodies are flat surfaces from which each object is cut.

  Note: If a file contains sheet bodies, this option must be selected for the file to be imported correctly.

- **Import wireframes**—Imports all wireframes if any exist.
- **Unit**—Used to select the unit type for which you want to view its custom unit (scene unit) measurement in meters. For example, 1 custom unit = 0.01 meters.
  - **File default**—Imports the file using the file's units.
  - **Millimeters**—Imports the file in millimeters (mm).
  - **Centimeters**—Imports the file in centimeters (cm).
  - **Meters**—Imports the file in meters (m).
  - **Inches**—Imports the file in inches (in).
  - **Feet**—Imports the file in feet (ft).
- **Ignore material opacity**—Disregards any material transparency that may have been set in the original file via an external application. That is, all the objects appear opaque. For example, a material opacity of 30% for an object is ignored, and the object is displayed with 100% opacity.
- **Auto-correct view orientation**—Attempts to correct the file's original view orientation to align with Deep Exploration's view orientation.
- **Import PMI** (on page 220)—Imports any Product Manufacturing Information (PMI) within the file. The PMI data objects can be accessed from within the 3D Objects list. Note that you must have the 'Show Markups (on page 257)' command on to view PMI data in the viewport.

Legacy—Used to establish the Legacy settings.

- **Default Tessellation** (on page 43)—Used to import the file using the default tessellation settings (arrangement and density of the polygons).

  Note: If you enter 0 (zero) for any of the tessellation settings, they are not taken into effect during the tessellation process.

  - **Tessellation** (on page 42)—Used to import the file using the level of tessellation.

Copyright © Right Hemisphere 2007. All Rights Reserved.

  - **Very high**—Displays a very high resolution using the values directly from the file. You are able to set custom values to give you a higher tessellation if a file has a very high polygon count. Note that using this option reduces processing speed.
  - **High**—Displays a high resolution with a high number of polygons. That is, the planar tolerance is set to the tessellation tolerance.
  - **Medium**—Displays a medium resolution with a medium number of polygons. That is, the planar tolerance is set to the tessellation tolerance and both are multiplied by 10.
  - **Low**—Displays a low resolution with a low number of polygons. That is, the planar tolerance is set to the tessellation tolerance and both are multiplied by 100. This option increases processing speed.

- **Custom Tessellation**—Used to customize the tessellation settings for all objects within the model. These settings are used when you triangulate (mesh) the faces/bodies of the model.

  Note: If you enter 0 (zero) for any of the tessellation settings, they are not taken into effect during the tessellation process.

  - **Angle tolerance** (on page 46)—The maximum angular deviation allowed between a face and its triangulation. Pairs of triangles do not incorporate a dihedral angle greater than this amount. This parameter gives a user added control over faces with very small radii. Lower values result in finer tessellations, while higher values give coarser tessellations.
  - **Planar tolerance** (on page 46)—The maximum distance allowed between a face and its triangulation for 3D solid objects. Triangle interiors do not deviate from the face interior by more than this amount.
  - **Tessellation tolerance** (on page 46)—The maximum distance allowed between an edge/curve and its tessellation. Triangle edges do not deviate from edges of the face by more than this amount, or by more than the maximum distance between the edge and the side of the facets along the edge when used in face triangulation.

    Tip: If you only want tessellation of edges/curves, enter values for the tessellation tolerance and angular tolerance.

    Note: Both planar and tessellation tolerance are considered in the units of the model being meshed. Therefore, they should be set to a similar value according to the model size to noticeably reduce the number of triangles generated. Model size/100 is a good starting point depending whether you want a fine or coarse mesh.

- **Display**—Used to display 2D vectors and 3D solids, or 3D solids only.
  - **2D vector and 3D solids**—Displays 2D vectors and 3D solids. Only the tessellation of 2D vectors is affected.
  - **3D solids**—Displays 3D solid objects only. As planar tolerance is for face triangulation of 3D solid objects only, this selection ensures planar tolerance affects the tessellation.
- **Tessellation** (on page 42)—Used to select the tessellation with which to import the file.
  - **Default**—Imports the file using the default tessellation settings.
  - **Custom**—Imports the file using the customized tessellation settings.

Geometry Transform (on page 41)—Used to transform (rotate, position, and scale) the scene along the X, Y, and Z axes.

- **Rotation**—Used to set the degrees of rotation around each axis from 0 to 360 degrees. The rotation values can be entered with up to 6 decimal places.
  - **X**—Rotates the scene along the X axis.
  - **Y**—Rotates the scene along the Y axis.
  - **Z**—Rotates the scene along the Z axis.
- **Position**—Used to set the position of the scene along the X, Y, and Z axes.

Copyright © Right Hemisphere 2007. All Rights Reserved.

  - **X**—Positions the scene along the X axis.
  - **Y**—Positions the scene along the Y axis.
  - **Z**—Positions the scene along the Z axis.
- **Scale**—Used to scale the object along the X, Y, and Z axes.
  - **X**—Scales the scene along the X axis.
  - **Y**—Scales the scene along the Y axis.
  - **Z**—Scales the scene along the Z axis.

Copyright © Right Hemisphere 2007. All Rights Reserved.

Standard ACIS Binary Import (.sab)

You can import and view Standard ACIS Binary (.sab) files.

The .sab file format (SAB) is the published format of ACIS by Spatial Technology. The SAT-format is used by different CAD/CAM-applications such as CADKEY, AutoCAD, and IronCAD.

The import options differ depending on the version of Deep Exploration you have installed:

- Certain options are available with the CAD Edition of Deep Exploration.
- Certain options are available with the Standard Edition of Deep Exploration and the CoreCAD Module or Pro/E Module.

Note that support for the CAD format versions (on page 560) also differs depending on the version of Deep Exploration you have installed.

Import Rules

The following rules apply when importing Pro/E files:

- When a file is first opened with the Pro/E Module, a medium resolution is used by default for fast file loading, and a dialog displays these resolution settings.
- The latest version of any part file within the folder is always opened. For example, sprng.prt.3 is opened if the folder contains spring.prt.1, spring.prt.2 and spring.prt.3.
- Parts and sub-assemblies are added to the external files list.
- Sub-assembly hierarchy is added for all part files, if any.
- Pro/E searches through folders for part and assembly files and for corresponding accelerator files (on page 623):

1. The current directory of the file.
2. In the search paths specified in the CAD Modules tab (on page 285).

If a part, assembly or accelerator file is not found, a message is displayed next to the object in the Scene Components panel (on page 329) advising you of this.

Standard ACIS Binary CAD Edition Import

You can import and view Standard ACIS Binary (.sab) files using the import options delivered with the CAD Edition of Deep Exploration.

For further information on using files, please see Opening Files (on page 39), Importing Files (on page 40), and Saving Files (on page 55).

Support

- Assembly hierarchy.
- Meshes.
- Parts data.
- Material and object names.

Limitations

- 2D vector data.
- Animation.
- BOM support based on part names.

Copyright © Right Hemisphere 2007. All Rights Reserved.

- Configurations.
- Solids/NURBS.
- Tessellation control.
- Textures.
- UV coordinates.

Interface

Common—Used to establish the common settings including tessellation (arrangement and density of the polygons) settings. Note that if you enter 0 (zero) for any of the tessellation settings, they are not taken into effect during the tessellation process.

- **Surface deviation** (on page 42)—Determines the maximum distance allowed between original analytical surface and its tessellated representation. Triangle edges do not deviate from edges of the face by more than this amount. The units are expressed as unit size based on those used by the model. A smaller surface deviation produces more triangles for smoother models.
- **Normal deviation** (on page 42)—Determines the maximum angular deviation (in degrees) allowed between a analytical surface and its triangulation. Pairs of triangles do not incorporate a dihedral angle greater than this amount. For example, this setting dictates the minimum number of facets around a smaller circle or cylinder regardless of the Surface Deviation setting. This parameter gives you added control over faces with very small radii. Lower values result in finer tessellations, while higher values give coarser tessellations.
- **Import hidden objects**—Imports all hidden objects. If, after importing a file, you modify any visible objects that contain hidden sub-objects after import, those hidden objects are also modified.
- **Display hidden objects**—Displays all hidden objects in the viewport after importing the file.
- **Import sheet bodies**—Imports all construction geometry. Sheet bodies are flat surfaces from which each object is cut.

  Note: If a file contains sheet bodies, this option must be selected for the file to be imported correctly.

- **Import wireframes**—Imports all wireframes if any exist.
- **Unit**—Used to select the unit type for which you want to view its custom unit (scene unit) measurement in meters. For example, 1 custom unit = 0.01 meters.
  - **File default**—Imports the file using the file's units.
  - **Millimeters**—Imports the file in millimeters (mm).
  - **Centimeters**—Imports the file in centimeters (cm).
  - **Meters**—Imports the file in meters (m).
  - **Inches**—Imports the file in inches (in).
  - **Feet**—Imports the file in feet (ft).
- **Ignore material opacity**—Disregards any material transparency that may have been set in the original file via an external application. That is, all the objects appear opaque. For example, a material opacity of 30% for an object is ignored, and the object is displayed with 100% opacity.
- **Auto-correct view orientation**—Attempts to correct the file's original view orientation to align with Deep Exploration's view orientation.

Geometry Transform (on page 41)—Used to transform (rotate, position, and scale) the scene along the X, Y, and Z axes.

Copyright © Right Hemisphere 2007. All Rights Reserved.

- **Rotation**—Used to set the degrees of rotation around each axis from 0 to 360 degrees. The rotation values can be entered with up to 6 decimal places.
  - **X**—Rotates the scene along the X axis.
  - **Y**—Rotates the scene along the Y axis.
  - **Z**—Rotates the scene along the Z axis.
- **Position**—Used to set the position of the scene along the X, Y, and Z axes.
  - **X**—Positions the scene along the X axis.
  - **Y**—Positions the scene along the Y axis.
  - **Z**—Positions the scene along the Z axis.
- **Scale**—Used to scale the object along the X, Y, and Z axes.
  - **X**—Scales the scene along the X axis.
  - **Y**—Scales the scene along the Y axis.
  - **Z**—Scales the scene along the Z axis.

Standard ACIS Binary Module Import

You can import and view Standard ACIS Binary (.sab) files using the import options delivered with the Standard Edition of Deep Exploration and the CoreCAD or Pro/E Module.

For further information on using files, please see Opening Files (on page 39), Importing Files (on page 40), and Saving Files (on page 55).

Support

- 2D vector data when importing with the Pro/E Module.
- Assembly hierarchy.
- Meshes.
- Parts data.
- Material and object names.
- Tessellation control is supported when importing using Method A.
- UV coordinates are supported when importing with the Pro/E Module using the Legacy method.

Limitations

- Animation.
- BOM support based on part names.
- Configurations.
- Solids/NURBS.
- Textures.

Interface

Import Method—Used to establish the way in which to import the file.

- **Method**—The method in which the file is imported. Each method utilizes differing import options to import the file.
  - **Method A**—Imports the file using Method A.

Copyright © Right Hemisphere 2007. All Rights Reserved.

  - **Legacy**—Imports the file using the Legacy method.

Method A—Used to establish the Method A settings.

- **Surface deviation** (on page 42)—Determines the maximum distance allowed between original analytical surface and its tessellated representation. Triangle edges do not deviate from edges of the face by more than this amount. The units are expressed as unit size based on those used by the model. A smaller surface deviation produces more triangles for smoother models.
- **Normal deviation** (on page 42)—Determines the maximum angular deviation (in degrees) allowed between a analytical surface and its triangulation. Pairs of triangles do not incorporate a dihedral angle greater than this amount. For example, this setting dictates the minimum number of facets around a smaller circle or cylinder regardless of the Surface Deviation setting. This parameter gives you added control over faces with very small radii. Lower values result in finer tessellations, while higher values give coarser tessellations.
- **Import hidden objects**—Imports all hidden objects. If, after importing a file, you modify any visible objects that contain hidden sub-objects after import, those hidden objects are also modified.
- **Display hidden objects**—Displays all hidden objects in the viewport after importing the file.
- **Import sheet bodies**—Imports all construction geometry. Sheet bodies are flat surfaces from which each object is cut.

  Note: If a file contains sheet bodies, this option must be selected for the file to be imported correctly.

- **Import wireframes**—Imports all wireframes if any exist.
- **Unit**—Used to select the unit type for which you want to view its custom unit (scene unit) measurement in meters. For example, 1 custom unit = 0.01 meters.
  - **File default**—Imports the file using the file's units.
  - **Millimeters**—Imports the file in millimeters (mm).
  - **Centimeters**—Imports the file in centimeters (cm).
  - **Meters**—Imports the file in meters (m).
  - **Inches**—Imports the file in inches (in).
  - **Feet**—Imports the file in feet (ft).
- **Ignore material opacity**—Disregards any material transparency that may have been set in the original file via an external application. That is, all the objects appear opaque. For example, a material opacity of 30% for an object is ignored, and the object is displayed with 100% opacity.
- **Auto-correct view orientation**—Attempts to correct the file's original view orientation to align with Deep Exploration's view orientation.
- **Import PMI** (on page 220)—Imports any Product Manufacturing Information (PMI) within the file. The PMI data objects can be accessed from within the 3D Objects list. Note that you must have the 'Show Markups (on page 257)' command on to view PMI data in the viewport.

Legacy—Used to establish the Legacy settings.

- **Default Tessellation** (on page 43)—Used to import the file using the default tessellation settings (arrangement and density of the polygons).

  Note: If you enter 0 (zero) for any of the tessellation settings, they are not taken into effect during the tessellation process.

  - **Tessellation** (on page 42)—Used to import the file using the level of tessellation.

Copyright © Right Hemisphere 2007. All Rights Reserved.

  - **Very high**—Displays a very high resolution using the values directly from the file. You are able to set custom values to give you a higher tessellation if a file has a very high polygon count. Note that using this option reduces processing speed.
  - **High**—Displays a high resolution with a high number of polygons. That is, the planar tolerance is set to the tessellation tolerance.
  - **Medium**—Displays a medium resolution with a medium number of polygons. That is, the planar tolerance is set to the tessellation tolerance and both are multiplied by 10.
  - **Low**—Displays a low resolution with a low number of polygons. That is, the planar tolerance is set to the tessellation tolerance and both are multiplied by 100. This option increases processing speed.

- **Custom Tessellation**—Used to customize the tessellation settings for all objects within the model. These settings are used when you triangulate (mesh) the faces/bodies of the model.

  Note: If you enter 0 (zero) for any of the tessellation settings, they are not taken into effect during the tessellation process.

  - **Angle tolerance** (on page 46)—The maximum angular deviation allowed between a face and its triangulation. Pairs of triangles do not incorporate a dihedral angle greater than this amount. This parameter gives a user added control over faces with very small radii. Lower values result in finer tessellations, while higher values give coarser tessellations.
  - **Planar tolerance** (on page 46)—The maximum distance allowed between a face and its triangulation for 3D solid objects. Triangle interiors do not deviate from the face interior by more than this amount.
  - **Tessellation tolerance** (on page 46)—The maximum distance allowed between an edge/curve and its tessellation. Triangle edges do not deviate from edges of the face by more than this amount, or by more than the maximum distance between the edge and the side of the facets along the edge when used in face triangulation.

    Tip: If you only want tessellation of edges/curves, enter values for the tessellation tolerance and angular tolerance.

    Note: Both planar and tessellation tolerance are considered in the units of the model being meshed. Therefore, they should be set to a similar value according to the model size to noticeably reduce the number of triangles generated. Model size/100 is a good starting point depending whether you want a fine or coarse mesh.

- **Display**—Used to display 2D vectors and 3D solids, or 3D solids only.
  - **2D vector and 3D solids**—Displays 2D vectors and 3D solids. Only the tessellation of 2D vectors is affected.
  - **3D solids**—Displays 3D solid objects only. As planar tolerance is for face triangulation of 3D solid objects only, this selection ensures planar tolerance affects the tessellation.
- **Tessellation** (on page 42)—Used to select the tessellation with which to import the file.
  - **Default**—Imports the file using the default tessellation settings.
  - **Custom**—Imports the file using the customized tessellation settings.

Geometry Transform (on page 41)—Used to transform (rotate, position, and scale) the scene along the X, Y, and Z axes.

- **Rotation**—Used to set the degrees of rotation around each axis from 0 to 360 degrees. The rotation values can be entered with up to 6 decimal places.
  - **X**—Rotates the scene along the X axis.
  - **Y**—Rotates the scene along the Y axis.
  - **Z**—Rotates the scene along the Z axis.
- **Position**—Used to set the position of the scene along the X, Y, and Z axes.

Copyright © Right Hemisphere 2007. All Rights Reserved.

  - **X**—Positions the scene along the X axis.
  - **Y**—Positions the scene along the Y axis.
  - **Z**—Positions the scene along the Z axis.
- **Scale**—Used to scale the object along the X, Y, and Z axes.
  - **X**—Scales the scene along the X axis.
  - **Y**—Scales the scene along the Y axis.
  - **Z**—Scales the scene along the Z axis.

Copyright © Right Hemisphere 2007. All Rights Reserved.

STEP Files Import (.step, .stp)

You can import and view STEP (Standard for the Exchange of Product Model Data (.step, .stp) files.

The .step file format is the ISO standard for exchange of Product Data. It covers much more than part geometry exchange and is used for bill of material, simulation data, and configuration management. STEP is based on the language Express that allows very strict specifications.

The import options differ depending on the version of Deep Exploration you have installed:

- Certain options are available with the CAD Edition of Deep Exploration.
- Certain options are available with the Standard Edition of Deep Exploration and the CoreCAD Module or Pro/E Module.

Note that support for the CAD format versions (on page 560) also differs depending on the version of Deep Exploration you have installed.

Import Rules

The following rules apply when importing Pro/E files:

- When a file is first opened with the Pro/E Module, a medium resolution is used by default for fast file loading, and a dialog displays these resolution settings.
- The latest version of any part file within the folder is always opened. For example, sprng.prt.3 is opened if the folder contains spring.prt.1, spring.prt.2 and spring.prt.3.
- Parts and sub-assemblies are added to the external files list.
- Sub-assembly hierarchy is added for all part files, if any.
- Pro/E searches through folders for part and assembly files and for corresponding accelerator files (on page 623):

1. The current directory of the file.
2. In the search paths specified in the CAD Modules tab (on page 285).

If a part, assembly or accelerator file is not found, a message is displayed next to the object in the Scene Components panel (on page 329) advising you of this.

STEP Files CAD Edition Import

You can import and view STEP (Standard for the Exchange of Product Model Data (.step, .stp) files using the import options delivered with the CAD Edition of Deep Exploration.

For further information on using files, please see Opening Files (on page 39), Importing Files (on page 40), and Saving Files (on page 55).

Support

- Assembly hierarchy.
- Meshes.
- Parts data.
- Material and object names.

Limitations

- 2D vector data.
- Animation.

Copyright © Right Hemisphere 2007. All Rights Reserved.

- BOM support based on part names.
- Configurations.
- Solids/NURBS.
- Tessellation control.
- Textures.
- UV coordinates.

Interface

Common—Used to establish the common settings including tessellation (arrangement and density of the polygons) settings. Note that if you enter 0 (zero) for any of the tessellation settings, they are not taken into effect during the tessellation process.

- **Surface deviation** (on page 42)—Determines the maximum distance allowed between original analytical surface and its tessellated representation. Triangle edges do not deviate from edges of the face by more than this amount. The units are expressed as unit size based on those used by the model. A smaller surface deviation produces more triangles for smoother models.
- **Normal deviation** (on page 42)—Determines the maximum angular deviation (in degrees) allowed between a analytical surface and its triangulation. Pairs of triangles do not incorporate a dihedral angle greater than this amount. For example, this setting dictates the minimum number of facets around a smaller circle or cylinder regardless of the Surface Deviation setting. This parameter gives you added control over faces with very small radii. Lower values result in finer tessellations, while higher values give coarser tessellations.
- **Import hidden objects**—Imports all hidden objects. If, after importing a file, you modify any visible objects that contain hidden sub-objects after import, those hidden objects are also modified.
- **Display hidden objects**—Displays all hidden objects in the viewport after importing the file.
- **Import sheet bodies**—Imports all construction geometry. Sheet bodies are flat surfaces from which each object is cut.

  Note: If a file contains sheet bodies, this option must be selected for the file to be imported correctly.

- **Import wireframes**—Imports all wireframes if any exist.
- **Unit**—Used to select the unit type for which you want to view its custom unit (scene unit) measurement in meters. For example, 1 custom unit = 0.01 meters.
  - **File default**—Imports the file using the file's units.
  - **Millimeters**—Imports the file in millimeters (mm).
  - **Centimeters**—Imports the file in centimeters (cm).
  - **Meters**—Imports the file in meters (m).
  - **Inches**—Imports the file in inches (in).
  - **Feet**—Imports the file in feet (ft).
- **Ignore material opacity**—Disregards any material transparency that may have been set in the original file via an external application. That is, all the objects appear opaque. For example, a material opacity of 30% for an object is ignored, and the object is displayed with 100% opacity.
- **Auto-correct view orientation**—Attempts to correct the file's original view orientation to align with Deep Exploration's view orientation.

Geometry Transform (on page 41)—Used to transform (rotate, position, and scale) the scene along the X, Y, and Z axes.

Copyright © Right Hemisphere 2007. All Rights Reserved.

- **Rotation**—Used to set the degrees of rotation around each axis from 0 to 360 degrees. The rotation values can be entered with up to 6 decimal places.
  - **X**—Rotates the scene along the X axis.
  - **Y**—Rotates the scene along the Y axis.
  - **Z**—Rotates the scene along the Z axis.
- **Position**—Used to set the position of the scene along the X, Y, and Z axes.
  - **X**—Positions the scene along the X axis.
  - **Y**—Positions the scene along the Y axis.
  - **Z**—Positions the scene along the Z axis.
- **Scale**—Used to scale the object along the X, Y, and Z axes.
  - **X**—Scales the scene along the X axis.
  - **Y**—Scales the scene along the Y axis.
  - **Z**—Scales the scene along the Z axis.

STEP Files Module Import

You can import and view STEP (Standard for the Exchange of Product Model Data (.step, .stp) files using the import options delivered with the Standard Edition of Deep Exploration and the CoreCAD or Pro/E Module.

For further information on using files, please see Opening Files (on page 39), Importing Files (on page 40), and Saving Files (on page 55).

Support

- 2D vector data when importing with the Pro/E Module.
- Assembly hierarchy.
- Meshes.
- Parts data.
- Material and object names.
- Tessellation control is supported when importing using Method A.
- UV coordinates are supported when importing with the Pro/E Module using the Legacy method.

Limitations

- Animation.
- BOM support based on part names.
- Configurations.
- Solids/NURBS.
- Textures.

Interface

Import Method—Used to establish the way in which to import the file.

- **Method**—The method in which the file is imported. Each method utilizes differing import options to import the file.
  - **Method A**—Imports the file using Method A.

Copyright © Right Hemisphere 2007. All Rights Reserved.

  - **Legacy**—Imports the file using the Legacy method.

Method A—Used to establish the Method A settings.

- **Surface deviation** (on page 42)—Determines the maximum distance allowed between original analytical surface and its tessellated representation. Triangle edges do not deviate from edges of the face by more than this amount. The units are expressed as unit size based on those used by the model. A smaller surface deviation produces more triangles for smoother models.
- **Normal deviation** (on page 42)—Determines the maximum angular deviation (in degrees) allowed between a analytical surface and its triangulation. Pairs of triangles do not incorporate a dihedral angle greater than this amount. For example, this setting dictates the minimum number of facets around a smaller circle or cylinder regardless of the Surface Deviation setting. This parameter gives you added control over faces with very small radii. Lower values result in finer tessellations, while higher values give coarser tessellations.
- **Import hidden objects**—Imports all hidden objects. If, after importing a file, you modify any visible objects that contain hidden sub-objects after import, those hidden objects are also modified.
- **Display hidden objects**—Displays all hidden objects in the viewport after importing the file.
- **Import sheet bodies**—Imports all construction geometry. Sheet bodies are flat surfaces from which each object is cut.

  Note: If a file contains sheet bodies, this option must be selected for the file to be imported correctly.

- **Import wireframes**—Imports all wireframes if any exist.
- **Unit**—Used to select the unit type for which you want to view its custom unit (scene unit) measurement in meters. For example, 1 custom unit = 0.01 meters.
  - **File default**—Imports the file using the file's units.
  - **Millimeters**—Imports the file in millimeters (mm).
  - **Centimeters**—Imports the file in centimeters (cm).
  - **Meters**—Imports the file in meters (m).
  - **Inches**—Imports the file in inches (in).
  - **Feet**—Imports the file in feet (ft).
- **Ignore material opacity**—Disregards any material transparency that may have been set in the original file via an external application. That is, all the objects appear opaque. For example, a material opacity of 30% for an object is ignored, and the object is displayed with 100% opacity.
- **Auto-correct view orientation**—Attempts to correct the file's original view orientation to align with Deep Exploration's view orientation.
- **Import PMI** (on page 220)—Imports any Product Manufacturing Information (PMI) within the file. The PMI data objects can be accessed from within the 3D Objects list. Note that you must have the 'Show Markups (on page 257)' command on to view PMI data in the viewport.

Legacy—Used to establish the Legacy settings.

- **Default Tessellation** (on page 43)—Used to import the file using the default tessellation settings (arrangement and density of the polygons).

  Note: If you enter 0 (zero) for any of the tessellation settings, they are not taken into effect during the tessellation process.

  - **Tessellation** (on page 42)—Used to import the file using the level of tessellation.

Copyright © Right Hemisphere 2007. All Rights Reserved.

  - **Very high**—Displays a very high resolution using the values directly from the file. You are able to set custom values to give you a higher tessellation if a file has a very high polygon count. Note that using this option reduces processing speed.
  - **High**—Displays a high resolution with a high number of polygons. That is, the planar tolerance is set to the tessellation tolerance.
  - **Medium**—Displays a medium resolution with a medium number of polygons. That is, the planar tolerance is set to the tessellation tolerance and both are multiplied by 10.
  - **Low**—Displays a low resolution with a low number of polygons. That is, the planar tolerance is set to the tessellation tolerance and both are multiplied by 100. This option increases processing speed.

- **Custom Tessellation**—Used to customize the tessellation settings for all objects within the model. These settings are used when you triangulate (mesh) the faces/bodies of the model.

  Note: If you enter 0 (zero) for any of the tessellation settings, they are not taken into effect during the tessellation process.

  - **Angle tolerance** (on page 46)—The maximum angular deviation allowed between a face and its triangulation. Pairs of triangles do not incorporate a dihedral angle greater than this amount. This parameter gives a user added control over faces with very small radii. Lower values result in finer tessellations, while higher values give coarser tessellations.
  - **Planar tolerance** (on page 46)—The maximum distance allowed between a face and its triangulation for 3D solid objects. Triangle interiors do not deviate from the face interior by more than this amount.
  - **Tessellation tolerance** (on page 46)—The maximum distance allowed between an edge/curve and its tessellation. Triangle edges do not deviate from edges of the face by more than this amount, or by more than the maximum distance between the edge and the side of the facets along the edge when used in face triangulation.

    Tip: If you only want tessellation of edges/curves, enter values for the tessellation tolerance and angular tolerance.

    Note: Both planar and tessellation tolerance are considered in the units of the model being meshed. Therefore, they should be set to a similar value according to the model size to noticeably reduce the number of triangles generated. Model size/100 is a good starting point depending whether you want a fine or coarse mesh.

- **Display**—Used to display 2D vectors and 3D solids, or 3D solids only.
  - **2D vector and 3D solids**—Displays 2D vectors and 3D solids. Only the tessellation of 2D vectors is affected.
  - **3D solids**—Displays 3D solid objects only. As planar tolerance is for face triangulation of 3D solid objects only, this selection ensures planar tolerance affects the tessellation.
- **Tessellation** (on page 42)—Used to select the tessellation with which to import the file.
  - **Default**—Imports the file using the default tessellation settings.
  - **Custom**—Imports the file using the customized tessellation settings.

Geometry Transform (on page 41)—Used to transform (rotate, position, and scale) the scene along the X, Y, and Z axes.

- **Rotation**—Used to set the degrees of rotation around each axis from 0 to 360 degrees. The rotation values can be entered with up to 6 decimal places.
  - **X**—Rotates the scene along the X axis.
  - **Y**—Rotates the scene along the Y axis.
  - **Z**—Rotates the scene along the Z axis.
- **Position**—Used to set the position of the scene along the X, Y, and Z axes.

Copyright © Right Hemisphere 2007. All Rights Reserved.

  - **X**—Positions the scene along the X axis.
  - **Y**—Positions the scene along the Y axis.
  - **Z**—Positions the scene along the Z axis.
- **Scale**—Used to scale the object along the X, Y, and Z axes.
  - **X**—Scales the scene along the X axis.
  - **Y**—Scales the scene along the Y axis.
  - **Z**—Scales the scene along the Z axis.

Copyright © Right Hemisphere 2007. All Rights Reserved.

Unigraphics Parts and Assemblies Import (.prt)

You can import and view Unigraphics Parts and Assemblies (.prt) files.

The import options differ depending on the version of Deep Exploration you have installed:

- Certain options are available with the CAD Edition of Deep Exploration.
- Certain options are available with the Standard Edition of Deep Exploration and the Unigraphics Module.

Note that support for the CAD format versions (on page 560) also differs depending on the version of Deep Exploration you have installed.

Unigraphics Parts and Assemblies CAD Edition Import

You can import and view Unigraphics Parts and Assemblies (.prt) files using the import options delivered with the CAD Edition of Deep Exploration.

For further information on using files, please see Opening Files (on page 39), Importing Files (on page 40), and Saving Files (on page 55).

Support

- 2D vector data.
- Assembly hierarchy.
- Materials and object names.
- Meshes.
- Parts data.
- Tessellation control.

Limitations

- Animation.
- BOM support based on part names.
- NURBS/Solids.
- Textures.
- UV coordinates.

Interface

Common—Used to establish the common settings including tessellation (arrangement and density of the polygons) settings. Note that if you enter 0 (zero) for any of the tessellation settings, they are not taken into effect during the tessellation process.

- **Surface deviation** (on page 42)—Determines the maximum distance allowed between original analytical surface and its tessellated representation. Triangle edges do not deviate from edges of the face by more than this amount. The units are expressed as unit size based on those used by the model. A smaller surface deviation produces more triangles for smoother models.

Copyright © Right Hemisphere 2007. All Rights Reserved.

- **Normal deviation** (on page 42)—Determines the maximum angular deviation (in degrees) allowed between a analytical surface and its triangulation. Pairs of triangles do not incorporate a dihedral angle greater than this amount. For example, this setting dictates the minimum number of facets around a smaller circle or cylinder regardless of the Surface Deviation setting. This parameter gives you added control over faces with very small radii. Lower values result in finer tessellations, while higher values give coarser tessellations.
- **Import hidden objects**—Imports all hidden objects. If, after importing a file, you modify any visible objects that contain hidden sub-objects after import, those hidden objects are also modified.
- **Display hidden objects**—Displays all hidden objects in the viewport after importing the file.
- **Import sheet bodies**—Imports all construction geometry. Sheet bodies are flat surfaces from which each object is cut.

Note: If a file contains sheet bodies, this option must be selected for the file to be imported correctly.

- **Import wireframes**—Imports all wireframes if any exist.
- **Import Metadata**—Imports file metadata from original CAD file (stored inside RH file as 'CADMetadata' category).
- **Unit**—Used to select the unit type for which you want to view its custom unit (scene unit) measurement in meters. For example, 1 custom unit = 0.01 meters.
  - **File default**—Imports the file using the file's units.
  - **Millimeters**—Imports the file in millimeters.
  - **Centimeters**—Imports the file in centimeters.
  - **Meters**—Imports the file in meters.
  - **Inches**—Imports the file in inches.
  - **Feet**—Imports the file in feet.
- **Reference Sets**—Used to import groups of parts in a specific order. The order of preference defines the order in which groups of parts are imported, the first reference set in the 'Reference set type' list is read. If it fails, the second reference set in the list is read and so on. This process continues until the file is successfully imported.
  - **Reference set type**—Used to select which reference set to import. The sets are ordered in import preference.
    - **As Saved**—Imports all the reference sets that were last saved in the scene.
    - **Entire Part**—Imports all the reference sets in the scene.
    - **Empty**—Does not import any reference sets.
    - **User-defined**—Imports the reference set as defined in 'User-defined reference set'.
  - **User-defined reference set**—The name of the reference set to import.
  - **Apply to all levels**—Applies the reference set import settings to all the model's sub-objects.
- **Ignore material opacity**—Disregards any material transparency that may have been set in the original file via an external application. That is, all the objects appear opaque. For example, a material opacity of 30% for an object is ignored, and the object is displayed with 100% opacity.
- **Auto-correct view orientation**—Attempts to correct the file's original view orientation to align with Deep Exploration's view orientation.
- **Import PMI** (on page 220)—Imports any Product Manufacturing Information (PMI) within the file. The PMI data objects can be accessed from within the 3D Objects list. Note that you must have the 'Show Markups (on page 257)' command on to view PMI data in the viewport.

Copyright © Right Hemisphere 2007. All Rights Reserved.

Geometry Transform (on page 41)—Used to transform (rotate, position, and scale) the scene along the X, Y, and Z axes.

- **Rotation**—Used to set the degrees of rotation around each axis from 0 to 360 degrees. The rotation values can be entered with up to 6 decimal places.
  - **X**—Rotates the scene along the X axis.
  - **Y**—Rotates the scene along the Y axis.
  - **Z**—Rotates the scene along the Z axis.
- **Position**—Used to set the position of the scene along the X, Y, and Z axes.
  - **X**—Positions the scene along the X axis.
  - **Y**—Positions the scene along the Y axis.
  - **Z**—Positions the scene along the Z axis.
- **Scale**—Used to scale the object along the X, Y, and Z axes.
  - **X**—Scales the scene along the X axis.
  - **Y**—Scales the scene along the Y axis.
  - **Z**—Scales the scene along the Z axis.

Unigraphics Parts and Assemblies Module Import

You can import and view Unigraphics Parts and Assemblies (.prt) files using the import options delivered with the Standard Edition of Deep Exploration and the Unigraphics Module.

For further information on using files, please see Opening Files (on page 39), Importing Files (on page 40), and Saving Files (on page 55).

Support

- 2D vector data.
- Assembly hierarchy is supported when importing using Method A.
- Materials and object names.
- Meshes.
- Parts data.
- Tessellation control.
- UV coordinates are supported when importing using the Legacy method.

Limitations

- Animation.
- Assembly hierarchy is not supported when importing using the Legacy method and the file is split into two temporary files.
- BOM support based on part names.
- NURBS/Solids data.
- Textures.

Interface

Common—Used to establish the common settings including tessellation (arrangement and density of the polygons) settings. Note that if you enter 0 (zero) for any of the tessellation settings, they are not taken into effect during the tessellation process.

Copyright © Right Hemisphere 2007. All Rights Reserved.

- **Surface deviation** (on page 42)—Determines the maximum distance allowed between original analytical surface and its tessellated representation. Triangle edges do not deviate from edges of the face by more than this amount. The units are expressed as unit size based on those used by the model. A smaller surface deviation produces more triangles for smoother models.
- **Normal deviation** (on page 42)—Determines the maximum angular deviation (in degrees) allowed between a analytical surface and its triangulation. Pairs of triangles do not incorporate a dihedral angle greater than this amount. For example, this setting dictates the minimum number of facets around a smaller circle or cylinder regardless of the Surface Deviation setting. This parameter gives you added control over faces with very small radii. Lower values result in finer tessellations, while higher values give coarser tessellations.
- **Import hidden objects**—Imports all hidden objects. If, after importing a file, you modify any visible objects that contain hidden sub-objects after import, those hidden objects are also modified.

Method A—Used to establish the Method A settings.

- **Display hidden objects**—Displays all hidden objects in the viewport after importing the file.
- **Import sheet bodies**—Imports all construction geometry. Sheet bodies are flat surfaces from which each object is cut.

  Note: If a file contains sheet bodies, this option must be selected for the file to be imported correctly.

- **Import wireframes**—Imports all wireframes if any exist.
- **Import Metadata**—Imports file metadata from original CAD file (stored inside RH file as 'CADMetadata' category).
- **Unit**—Used to select the unit type for which you want to view its custom unit (scene unit) measurement in meters. For example, 1 custom unit = 0.01 meters.
  - **File default**—Imports the file using the file's units.
  - **Millimeters**—Imports the file in millimeters.
  - **Centimeters**—Imports the file in centimeters.
  - **Meters**—Imports the file in meters.
  - **Inches**—Imports the file in inches.
  - **Feet**—Imports the file in feet.
- **Ignore material opacity**—Disregards any material transparency that may have been set in the original file via an external application. That is, all the objects appear opaque. For example, a material opacity of 30% for an object is ignored, and the object is displayed with 100% opacity.
- **Auto-correct view orientation**—Attempts to correct the file's original view orientation to align with Deep Exploration's view orientation.
- **Import PMI** (on page 220)—Imports any Product Manufacturing Information (PMI) within the file. The PMI data objects can be accessed from within the 3D Objects list. Note that you must have the 'Show Markups (on page 257)' command on to view PMI data in the viewport.

Legacy—Used to establish the Legacy settings.

- **Maximum edge length** (on page 42)—Selects the maximum allowed length of each edge, as a percentage the scene bounding box diagonal. This helps to prevent long, narrow polygons being created. For example, if you enter 10%, the length of any edge will be less than 1/10 of diagonal length of object’s bounding box.
- **Grid aspect ratio** (on page 42)—Determines the ratio (between 0 and 1) of the width to height for each 'surface square'. For example, if you enter 1, the tessellation process attempts to produce squares instead of rectangles. This is helpful in avoiding the creation of very long, narrow triangles which can cause undesirable lighting and shading artifacts.

Copyright © Right Hemisphere 2007. All Rights Reserved.

- **Create material for all faces**—Creates and assigns a new material to all the faces. The new materials have the same names as the faces (if face names exist). Otherwise, it uses the objects' names.
- **Merge sub-objects**—Combines all sub-objects into a single part.
- **Heal solid objects**—Welds the edges of all solid objects together.
- **Log file**—Creates an information log file in the same folder as the 3D file. The log includes system information, user-specified settings, a conversion summary, and the result of the import.
- **Split files over [MB]**—Divides the file into smaller temporary files if the file exceeds the specified file size. This is helpful as the tessellation process can create numerous vertices exceeding the available memory.

  Note: Using this option can speed up tessellation process even if the import file does not exceed the specified size.

- **File size**—The size at which the file is divided into smaller temporary files.

Reference Sets—Used to import groups of parts in a specific order. The order of preference defines the order in which groups of parts are imported, the first reference set in the 'Reference set type' is read. If it fails, the second reference set in the list is read and so on. This process continues until the file is successfully imported.

- **Reference set type**—Used to select which reference set to import. The sets are ordered in import preference.
  - **As Saved**—Imports all the reference sets that were last saved in the scene.
  - **Entire Part**—Imports all the reference sets in the scene.
  - **Empty**—Does not import any reference sets.
  - **User-defined**—Imports the reference set as defined in the 'User-defined reference set' option.
- **User-defined reference set**—The name of the reference set to import.
- **Apply to all levels**—Applies the reference set import settings to all the model's sub-objects.

Geometry Transform (on page 41)—Used to transform (rotate, position, and scale) the scene along the X, Y, and Z axes.

- **Rotation**—Used to set the degrees of rotation around each axis from 0 to 360 degrees. The rotation values can be entered with up to 6 decimal places.
  - **X**—Rotates the scene along the X axis.
  - **Y**—Rotates the scene along the Y axis.
  - **Z**—Rotates the scene along the Z axis.
- **Position**—Used to set the position of the scene along the X, Y, and Z axes.
  - **X**—Positions the scene along the X axis.
  - **Y**—Positions the scene along the Y axis.
  - **Z**—Positions the scene along the Z axis.
- **Scale**—Used to scale the object along the X, Y, and Z axes.
  - **X**—Scales the scene along the X axis.
  - **Y**—Scales the scene along the Y axis.
  - **Z**—Scales the scene along the Z axis.

Copyright © Right Hemisphere 2007. All Rights Reserved.

VDA File Import (.vda)

You can import and view VDA (Verband Der Automobilindustrie Flachen Schnittstelle Exchange) (.vda) files.

The .vda file format (VDA-FS) is a standard file format to exchange surface data. It is popular in Europe due to the endorsement of several major European car manufacturers. It represents all the data in polynomial form making it relatively easy to write a stable and reliable processor to import 3D surfaces. The polynomial representation has several limitations over more modern ones like NURBS. Using VDA-FS to exchange 3D data provides a relatively reliable way to move data around.

For further information on using files, please see Opening Files (on page 39), Importing Files (on page 40), and Saving Files (on page 55).

Support

- 2D vector data.
- Assembly hierarchy.
- Meshes.
- Parts data.
- Material and object names.
- Tessellation control.
- UV coordinates are supported when importing using Method A.

Limitations

- Animation.
- BOM support based on part names.
- Configurations.
- Solids/NURBS.
- Textures.

Interface

Import Method—Used to establish the way in which to import the file.

- **Method**—The method in which the file is imported. Each method utilizes differing import options to import the file.
  - **Method A**—Imports the file using Method A.
  - **Legacy**—Imports the file using the Legacy method.

Method A—Used to establish the Method A settings.

- **Surface deviation** (on page 42)—Determines the maximum distance allowed between original analytical surface and its tessellated representation. Triangle edges do not deviate from edges of the face by more than this amount. The units are expressed as unit size based on those used by the model. A smaller surface deviation produces more triangles for smoother models.
- **Normal deviation** (on page 42)—Determines the maximum angular deviation (in degrees) allowed between a analytical surface and its triangulation. Pairs of triangles do not incorporate a dihedral angle greater than this amount. For example, this setting dictates the minimum number of facets around a smaller circle or cylinder regardless of the Surface Deviation setting. This parameter gives you added control over faces with very small radii. Lower values result in finer tessellations, while higher values give coarser tessellations.

Copyright © Right Hemisphere 2007. All Rights Reserved.

- **Import hidden objects**—Imports all hidden objects. If, after importing a file, you modify any visible objects that contain hidden sub-objects after import, those hidden objects are also modified.
- **Display hidden objects**—Displays all hidden objects in the viewport after importing the file.
- **Import sheet bodies**—Imports all construction geometry. Sheet bodies are flat surfaces from which each object is cut.

Note: If a file contains sheet bodies, this option must be selected for the file to be imported correctly.

- **Import wireframes**—Imports all wireframes if any exist.
- **Unit**—Used to select the unit type for which you want to view its custom unit (scene unit) measurement in meters. For example, 1 custom unit = 0.01 meters.
  - **File default**—Imports the file using the file's units.
  - **Millimeters**—Imports the file in millimeters.
  - **Centimeters**—Imports the file in centimeters.
  - **Meters**—Imports the file in meters.
  - **Inches**—Imports the file in inches.
  - **Feet**—Imports the file in feet.
- **Ignore material opacity**—Disregards any material transparency that may have been set in the original file via an external application. That is, all the objects appear opaque. For example, a material opacity of 30% for an object is ignored, and the object is displayed with 100% opacity.
- **Auto-correct view orientation**—Attempts to correct the file's original view orientation to align with Deep Exploration's view orientation.
- **Import PMI** (on page 220)—Imports any Product Manufacturing Information (PMI) within the file. The PMI data objects can be accessed from within the 3D Objects list. Note that you must have the 'Show Markups (on page 257)' command on to view PMI data in the viewport.

Legacy—Used to establish the Legacy settings.

- **Default Tessellation** (on page 43)—Used to import the file using the default tessellation settings (arrangement and density of the polygons).

Note: If you enter 0 (zero) for any of the tessellation settings, they are not taken into effect during the tessellation process.

  - **Tessellation** (on page 42)—Used to import the file using the level of tessellation.
    - **Very high**—Displays a very high resolution using the values directly from the file. You are able to set custom values to give you a higher tessellation if a file has a very high polygon count. Note that using this option reduces processing speed.
    - **High**—Displays a high resolution with a high number of polygons. That is, the planar tolerance is set to the tessellation tolerance.
    - **Medium**—Displays a medium resolution with a medium number of polygons. That is, the planar tolerance is set to the tessellation tolerance and both are multiplied by 10.
    - **Low**—Displays a low resolution with a low number of polygons. That is, the planar tolerance is set to the tessellation tolerance and both are multiplied by 100. This option increases processing speed.
- **Custom Tessellation**—Used to customize the tessellation settings for all objects within the model. These settings are used when you triangulate (mesh) the faces/bodies of the model.

Note: If you enter 0 (zero) for any of the tessellation settings, they are not taken into effect during the tessellation process.

Copyright © Right Hemisphere 2007. All Rights Reserved.

  - **Angle tolerance** (on page 46)—The maximum angular deviation allowed between a face and its triangulation. Pairs of triangles do not incorporate a dihedral angle greater than this amount. This parameter gives a user added control over faces with very small radii. Lower values result in finer tessellations, while higher values give coarser tessellations.
  - **Planar tolerance** (on page 46)—The maximum distance allowed between a face and its triangulation for 3D solid objects. Triangle interiors do not deviate from the face interior by more than this amount.
  - **Tessellation tolerance** (on page 46)—The maximum distance allowed between an edge/curve and its tessellation. Triangle edges do not deviate from edges of the face by more than this amount, or by more than the maximum distance between the edge and the side of the facets along the edge when used in face triangulation.

    Tip: If you only want tessellation of edges/curves, enter values for the tessellation tolerance and angular tolerance.

    Note: Both planar and tessellation tolerance are considered in the units of the model being meshed. Therefore, they should be set to a similar value according to the model size to noticeably reduce the number of triangles generated. Model size/100 is a good starting point depending whether you want a fine or coarse mesh.

- **Display**—Used to display 2D vectors and 3D solids, or 3D solids only.
  - **2D vector and 3D solids**—Displays 2D vectors and 3D solids. Only the tessellation of 2D vectors is affected.
  - **3D solids**—Displays 3D solid objects only. As planar tolerance is for face triangulation of 3D solid objects only, this selection ensures planar tolerance affects the tessellation.
- **Tessellation** (on page 42)—Used to select the tessellation with which to import the file.
  - **Default**—Imports the file using the default tessellation settings.
  - **Custom**—Imports the file using the customized tessellation settings.

Geometry Transform (on page 41)—Used to transform (rotate, position, and scale) the scene along the X, Y, and Z axes.

- **Rotation**—Used to set the degrees of rotation around each axis from 0 to 360 degrees. The rotation values can be entered with up to 6 decimal places.
  - **X**—Rotates the scene along the X axis.
  - **Y**—Rotates the scene along the Y axis.
  - **Z**—Rotates the scene along the Z axis.
- **Position**—Used to set the position of the scene along the X, Y, and Z axes.
  - **X**—Positions the scene along the X axis.
  - **Y**—Positions the scene along the Y axis.
  - **Z**—Positions the scene along the Z axis.
- **Scale**—Used to scale the object along the X, Y, and Z axes.
  - **X**—Scales the scene along the X axis.
  - **Y**—Scales the scene along the Y axis.
  - **Z**—Scales the scene along the Z axis.

Copyright © Right Hemisphere 2007. All Rights Reserved.

Appendix I: Miscellaneous File Formats

The following miscellaneous file formats are supported by Deep Exploration CAD and Standard Editions and Deep Server. This list is organized alphabetically by file format.

File Format	Type	Extension	View/ Import	Export	Version/Notes
Text File	Text	TXT	Yes (on page 674)		
WinRAR Compressed Archive	Archive	RAR	Yes (on page 674)		
ZIP Archive	Archive	ZIP	Yes (on page 675)		

Copyright © Right Hemisphere 2007. All Rights Reserved.

Text File (.txt)

You can view Text File (.txt) files.

The .txt file format is a pure ASCII text with no formatting. They can also be opened in Notepad, WordPad, or other text editors.

For further information on using files, please see Opening Files (on page 39), Importing Files (on page 40), and Saving Files (on page 55).

WinRAR Compressed Archive (.rar)

You can view the compressed files contained within WinRAR Compressed Archive (.rar) files.

The .rar file format is the native format of WinRAR archiver. Like other archives, .rar files are data containers, they store one or several files in the compressed form.

Note: When you open an archive file, you are able to view the compressed files that are contained within it.

For further information on using files, please see Opening Files (on page 39), Importing Files (on page 40), and Saving Files (on page 55).

Copyright © Right Hemisphere 2007. All Rights Reserved.

ZIP Archive (.zip)

You can view the compressed files contained within ZIP Archive (.zip) files.

The .zip file format is a format where files are compressed (referred to as 'zipped') using a file compression program such as PKZip for DOS or Winzip for Windows. It is a popular archive format widely used in the Internet. Like other archives, .zip files are data containers, they store one or several files in the compressed form.

After you download .zip file, you must unpack its contents in order to use it.

Note: When you open an archive file, you are able to view the compressed files that are contained within it.

For further information on using files, please see Opening Files (on page 39), Importing Files (on page 40), and Saving Files (on page 55).

Copyright © Right Hemisphere 2007. All Rights Reserved.

Index

2

2D Editor Toolbar • 269, 364
2D Images • 441
2D Navigation Shortcuts • 64, 434
2D Tools Menu • 273, 275, 390
2D View Tab • 85, 281, 364, 441
2D Viewport Menus • 390, 458

3

3D Editor Toolbar • 77, 80, 88, 94, 109, 151, 254, 329, 363, 365
3D Navigation Help • 225, 227
3D Navigation Shortcuts • 15, 64, 434
3D Objects List Menu • 102, 332, 414
3D Tools Menu • 188, 273, 278, 396
3D View Tab • 61, 87, 88, 282, 288, 334
3D Viewport Menus • 102, 299, 332, 391
3ds Max DCOM Plugin • 427, 476
3ds Max DCOM Plugin Installation Dialog • 429
3Dx Input Device Settings • 273, 297

A

Accelerator Files • 593, 610, 616, 622, 628, 646, 652, 658
Action • 140, 357
Add Deep Server Dialog • 404
Add Project Dialog • 209, 406
Adding Projects • 209, 309, 310, 406, 410
Adding, Renaming and Removing Servers • 206, 207, 208, 309, 311, 404, 405, 406
Additional Map Properties Dialog • 353, 538
Address Bar • 313, 314
Adobe Encapsulated Postscript Export (.eps) • 449, 451
Adobe Encapsulated Postscript Import (.eps) • 449, 451
Adobe Illustrator Vector Graphic (.ai) • 449, 451
Adobe Illustrator Vector Graphic Export (.ai) • 449, 451
Adobe Photoshop Document (.psd) • 449, 452
Adobe Portable Document 2D Export (.pdf) • 449, 452
Adobe Portable Document 3D Export (.pdf) • 239, 449, 453
Advanced Search Panel • 214, 311
Advanced Settings Dialog • 165, 166
Advanced Streaming Format (.asf) • 544, 545
Advanced Tab • 85, 334, 336
Alpha Channel Dialog • 275, 276, 296, 364, 441
animation • 246
Animation • 7, 109, 228, 315, 332, 335, 345, 349, 350, 354, 366, 443
Animation Controls • 109, 110, 131, 225, 228, 247, 313, 315, 318
Animation Options Dialog • 111, 131, 251, 315, 316, 317, 319
Animation Tab • 55, 56, 499
Animation Timeline • 109, 313, 316, 318, 399, 423
Animation Timeline Menus • 318, 399
Animation Tree • 109, 317, 331, 357
Animation Tree Menu • 109, 357, 417
AOFF File Format (.geo) • 476, 478
AOFF File Format Export (.geo) • 476, 478
Appearance Information • 337
Appendix A
  2D File Formats • 107, 162, 163, 176, 449
Appendix B
  3D File Formats • 476
Appendix C
  Audio File Formats • 114, 320, 541
Appendix D
  Video File Formats • 114, 362, 544
Appendix E
  Motion Capture File Formats • 547
Appendix F
  Material File Formats • 554
Appendix G
  Shader File Formats • 557
Appendix H
  CAD File Formats • 13, 14, 32, 40, 559, 575, 580, 593, 600, 605, 610, 616, 622, 628, 646, 652, 658, 664
Appendix I
  Miscellaneous File Formats • 39, 384, 672
Assemblies Tab • 308, 309, 310
Asset and Item Node Menu • 410
Assets and Derivatives • 205, 410
Assets Tab • 308, 309, 310
Associated Files • 206, 216, 411
Attributes Tab • 278, 334, 335, 397
Audio and Video Files • 7, 114, 320, 362
Audio Controls • 114, 313, 320, 542, 543
Audio Interchange Format (.aif, .aiff) • 541, 542
Audio Video Interleave Animation (.avi) • 544, 545
Audio Video Interleave Animation Export (.avi) • 544, 546
AutoCAD Design Web Format Export (.dwf) • 559, 562
AutoCAD Design Web Format Import (.dwf) • 559, 561
AutoCAD Drawing Interchange Export (.dxf) • 559, 563
AutoCAD Drawing Interchange Import (.dxf) • 559, 564
AutoCAD Drawing Object Export (.dwg) • 559, 568
AutoCAD Drawing Object Import (.dwg) • 559, 566
AutoCAD Sheet Set File Import (.dst) • 559, 569

Copyright © Right Hemisphere 2007. All Rights Reserved.

Autodesk 3D Studio ASCII (.asc) • 476, 479
Autodesk 3D Studio ASCII Export (.asc) • 476, 479
Autodesk 3D Studio Export (.3ds) • 476, 481
Autodesk 3D Studio Import (.3ds) • 476, 480
Autodesk 3D Studio Material (.mli) • 499, 501, 554, 555
Autodesk 3D Studio Max ASCII (.ase) • 476, 482
Autodesk 3D Studio Project Import (.prj) • 476, 482
Autodesk Animator Graphic (.cel) • 449, 458
Autodesk Inventor Assembly Import (.iam) • 559, 570
Autodesk Inventor Part Import (.ipt) • 559, 572

B

Bake Realight Textures • 204, 383
Bake Transformation • 87, 278
Basic Search Panel • 214, 311
Basic Tab • 278, 351, 397
Batch Operations • 188, 249, 251, 401
Benchmark Settings Dialog • 115, 279
Benchmarking a File • 7, 115, 278, 279, 397
BioVision Hierarchical Data and Character Studio Sub-Format Export (.bvh) • 547, 548
BioVision Hierarchical Data and Character Studio Sub-Format Import (.bvh) • 547, 550
BOM Settings • 140, 144
BOM Source • 135, 143, 357
Bone Information • 337, 341
Bone Tab • 341, 344
BREP Tab • 343
Browse a Folder • 431
Browsing and Viewing Assets and Items • 206, 213, 215, 216
Button Properties • 236

C

CAD and Standard Editions • 13, 32, 363
CAD Modules Tab • 285, 593, 610, 616, 622, 628, 646, 652, 658
CADKEY Advanced Design Language Import (.cdl) • 559, 574
CADTools • 7, 13, 14, 116, 316
CADTools Toolbar • 363, 366
Calculating Intersections • 164, 166, 456
Caligari trueSpace Object Export (.cob) • 476, 484
Caligari trueSpace Object Import (.cob) • 476, 483
Caligari trueSpace Scene Import (.scn) • 476, 485
Callout Settings Dialog • 135, 136, 138, 357
Callouts • 7, 135, 137, 151, 162, 230, 357
Camera Information • 337, 341
Camera Tab • 81, 341, 344
Camera Views • 63, 64, 67, 75, 263, 394, 396
CATIA Import (.cgr, .dlv, .model, .session) • 559, 575
CATIA Model CAD Edition Import • 575
CATIA Module Import • 559, 577
CATIA5 Assembly and Part CAD Edition Import • 580
CATIA5 Assembly and Part Import (.catpart, .catproduct) • 559, 580
CATIA5 Assembly and Part Module Import • 559, 582
CATIA5 Assembly and Part Module Import Method B???? • 584
Character Studio Export (.csm) • 547, 551
Character Studio Import (.csm) • 547, 551
CINEMA 4D (.c4d) • 476, 485
Closing Deep Exploration • 8, 245, 249
Collada File Export (.dae) • 476, 487
Collada File Import (.dae) • 476, 486
Color and HDR Images • 176, 178
Color Dialog • 62
Color Objects Settings • 133, 367
Coloring Objects • 116, 133, 367
Colors Tab • 71, 282, 287
Combo Box Properties • 238
Command Line Arguments • 80, 430
Compression • 442
Computer Graphics Metafile Export (.cgm) • 559, 587
Computer Graphics Metafile Import (.cgm) • 559, 588
Contents Tab • 26
Continuous Draw • 159, 371
Controls • 109, 246, 255, 313, 422
Conventions • 15
Convert 2D Files • 251, 253
Convert 3D Files • 183, 251, 252
Converting to Double-Sided • 116, 130, 278, 367, 397
Coordinate 3D Import (.c3d) • 547, 552
Coordinate Systems • 80, 288, 289, 320, 349, 366, 391, 394
Copyright and Trademarks • 9
Create Menu • 73, 74, 77, 248, 261, 263, 393, 414
Create Step Dialog • 360
Creating and Removing Callouts • 136, 137
Creating Markups • 151, 152, 370, 371
Creating New Scenes • 7, 38, 380
Cross Section Tab • 150
Customize Layout Dialog • 257, 273, 315, 423
Customizing the User Interface • 69, 246, 255, 257, 313, 314, 315, 318, 321, 324, 325, 327, 329, 330, 359, 363, 365, 422
Cutting and Cross Section Settings • 147, 148, 149, 368
Cutting and Cross-Sectioning • 7, 147, 367, 368
Cutting Tab • 149
Cutting Toolbar • 363, 367

D

Deep Exploration Overview • 7, 32

Copyright © Right Hemisphere 2007. All Rights Reserved.

Default Material • 82, 287, 289
Default Tessellation • 44, 590, 596, 613, 619, 626, 632, 649, 655, 661, 670
Defining Search Terms
Using Boolean Expressions • 24
Deleting Assemblies • 209, 217, 411
Detail View • 152, 157, 370
Detail View Global Settings • 159
DirectX DirectDraw Surface (.dds) • 449, 458
DirectX Model Export (.x) • 476, 488
DirectX Model Import (.x) • 476, 489
Display a Slide Show • 431
Display Menu • 63, 72, 73, 82, 106, 248, 258, 287, 334, 368, 576, 578, 581, 583, 586, 590, 596, 603, 611, 613, 619, 624, 626, 630, 632, 635, 637, 639, 641, 643, 645, 649, 655, 661, 665, 667, 670
Display Modes • 80, 255, 380, 432
Display Renderer • 183, 188, 192, 246, 247, 248, 258, 259, 268, 279, 292, 378, 421
Display Settings Panel • 30, 52, 71, 258, 313, 321, 336, 392
Display Toolbar • 72, 82, 260, 287, 334, 363, 368
Displaying and Deleting Markups • 151, 156, 370
Displaying and Hiding Components • 423
Docking and Floating Components • 425
Documentation Conventions • 19
Downloading Assets and Items • 206, 209, 212, 213, 215, 217, 308, 309, 388, 405, 410, 411
Downloads Tab • 387
Drawing and Markup Properties • 371
Drawing and Markup Toolbar • 363, 369
Drawing and Markup Tools • 7, 78, 151, 152, 259, 369, 370, 371
Drawing Global Settings • 155
Duplicating Objects • 94, 96, 97, 98, 100, 188, 357, 399

E

EA/Amiga Interchange File Format (.iff) • 449, 458
Edit Menu • 248, 254, 358, 386
Editing Markups • 151, 156, 220
Editing Properties • 236
eLicense • 28
eLicensing • 28
Embedding Content • 8, 161, 206, 212
Environment Tab • 73, 261, 320, 334, 344
Explode Objects Settings • 131, 132, 367
Exploded Animations • 443
Exploding Objects • 111, 116, 131, 316, 367, 443
Explorer bar • 246
Explorer Bar • 247, 248, 249, 255, 300, 422
Exporting the BOM and Callouts • 137
External Application Plugins • 426

F

FAQs • 28
Favorites List • 30, 52, 272, 301, 302, 304, 305, 308, 380, 402, 403
Favorites Menu • 248, 272
Favorites Panel • 403
File Formats Tab • 180
File list • 246
File List • 38, 39, 48, 161, 213, 247, 308, 384, 388
File List Menus • 384, 387, 388, 389, 401
File List Toolbar • 384, 386
File Menu • 189, 248, 249, 380
File Shortcuts • 436
File Updates and Frequency • 31
Files Tab • 290
FiLMBOX Export (.fbx) • 476, 490
FiLMBOX Import (.fbx) • 476, 490
Finding Information Fast • 20
Flexible Precision Buffer Map (.flx) • 449, 459
FLIC Animator Animation (.flc) • 449, 459
FLIC Animator Animation (.fli) • 449, 459
Folder Node Menu • 410
Folders Panel • 191, 301, 302, 304, 305, 308, 314, 380, 384
Folders Panel Menus • 251, 301, 401, 402, 403, 412

G

Gateway Module • 8, 13, 14, 48, 205, 300, 308, 384, 388, 401
Gateway Panel • 205, 206, 301, 302, 304, 305, 308, 404
Gateway Panel Menus • 205, 308, 310, 401, 404
Gateway Properties Dialog • 218, 408
Gateway Tabs • 205, 212, 214, 215, 216, 308, 310, 388
Gateway Tree • 212, 309, 310, 388
General Shortcuts • 437
General Tab • 40, 41, 56, 408
Generate Thumbnails Dialog • 273, 296, 297, 384, 386, 401
Geometry Tab • 343, 344, 346, 347
Geometry Transform • 41, 565, 567, 570, 572, 574, 576, 579, 581, 583, 586, 591, 595, 597, 601, 604, 606, 607, 609, 611, 614, 617, 620, 624, 627, 630, 633, 635, 637, 639, 641, 643, 645, 647, 650, 653, 656, 659, 662, 666, 668, 671
Geometry Transform Tab • 55, 57, 499
Getting Started with Deep Exploration • 7, 36
Google SketchUp Document Export (.skp) • 476, 492
Google SketchUp Document Import (.skp) • 476, 491
Granite File Import (.g) • 559, 589
Graphics Interchange Format (.gif) • 449, 460
Grid Aspect Ratio • 45

Copyright © Right Hemisphere 2007. All Rights Reserved.

Grid Menu • 85, 258, 260, 437
Grid Menu Shortcuts • 437
Grouping and Hierarchies • 87, 103, 396, 397, 414, 416, 418

H

Heal Model Dialog • 129
Heal Model Settings • 128, 129
Healing Models • 116, 126, 128, 442
Help Menu • 248, 298
Hewlett-Packard Graphics Library Import (.hpgl, .plt,) • 559, 592
Hierarchical Translations and Rotations Import (.htr) • 547, 552
High Dynamic Range Images • 8, 176, 299, 459, 465, 466, 468
Hints and Tips • 124, 131, 440
History List • 30, 52, 273, 301, 302, 304, 305, 308, 380
History List Menus • 412
HTML Document with 3D (.html) • 183, 476, 493
HTML Help Viewer Toolbar • 22

I

IGES Format CAD Edition Import • 593
IGES Format Import (.iges, .igs) • 559, 593
IGES Format Module Import • 559, 595
Illustration Toolbar • 363, 372
Illustration Tools • 8, 13, 14, 162, 188, 189
Image Annotations • 225, 226
Imagine Geometry (.iob) • 476, 494
Importing Files • 7, 13, 39, 40, 53, 181, 220, 222, 239, 249, 325, 402, 403, 412, 451, 452, 453, 458, 459, 460, 461, 462, 463, 464, 465, 466, 467, 468, 469, 470, 471, 472, 473, 474, 475, 478, 479, 480, 481, 482, 483, 484, 485, 486, 487, 488, 489, 490, 491, 492, 493, 494, 495, 496, 497, 498, 499, 501, 503, 504, 505, 506, 507, 508, 509, 510, 511, 513, 514, 515, 516, 517, 518, 519, 520, 521, 522, 524, 525, 526, 527, 529, 530, 531, 533, 534, 535, 537, 538, 539, 542, 543, 545, 546, 548, 550, 551, 552, 553, 555, 556, 558, 561, 562, 563, 564, 566, 568, 569, 570, 572, 574, 575, 577, 580, 582, 584, 587, 588, 589, 592, 593, 595, 599, 600, 602, 605, 606, 608, 610, 612, 616, 618, 623, 625, 629, 631, 634, 636, 638, 640, 642, 644, 646, 648, 652, 654, 658, 660, 664, 666, 669, 673, 674
Index Tab • 26
Infinite and Point Lights • 74, 263
Information Bar • 108, 247, 313, 324
Information Bar Menu • 324, 412
Information Tab • 77, 348, 355
Interface Components • 246
Interpolation Methods • 110, 112, 319, 399
Introduction (DE5) • 7
Inverting Faces and Normals • 116, 117, 118, 366, 397
ISO G Code Format (.iso, .nc) • 476, 494
Item Information Window • 182, 264, 336, 337

J

Join Equal Point Settings • 123, 367
Joining Equal Points • 116, 122, 367, 397
JPEG 2000 J2K (.j2k) • 449, 460
JPEG 2000 JP2 (.jp2) • 449, 460
JPEG 2000 JP2 Export (.jp2) • 449, 461
JPEG 2000 JPC (.jpc) • 449, 462
JPEG 2000 JPC Export (.jpc) • 449, 462
JPEG 2000 JPX (.jpx) • 449, 463
JPEG Image (.jpeg, .jpg) • 449, 463
JPEG Image Export (.jpeg, .jpg) • 449, 463
JT File CAD Edition Import • 600
JT File Export (.jt) • 559, 599
JT File Import (.jt) • 600
JT File Module Import • 602
JT PMI Module • 8, 13, 14, 152, 220, 230, 375, 575, 576, 577, 578, 581, 583, 586, 590, 596, 603, 611, 613, 619, 624, 626, 630, 632, 635, 637, 639, 641, 643, 645, 649, 655, 661, 665, 667, 670

K

Key Properties Dialog • 400
Keyboard Shortcuts • 15, 298, 396, 414, 416, 419, 433
  Help Viewer • 26

L

Lattice XVL Structure and Geometry CAD Edition Import • 605
Lattice XVL Structure and Geometry Import (.xv0, .xv3) • 559, 605
Lattice XVL Structure and Geometry Module Import • 559, 606
Layer Controls • 225, 235
Layer Properties Dialog • 169, 420
Layers • 8, 40, 55, 88, 135, 169, 358, 395, 416, 417
Layers Panel • 104, 169, 331, 357
Layers Panel Menu • 169, 357, 419
Level of Detail Controls • 188, 313, 325, 533
License Activation • 13, 29
Light Information • 337, 342
Light Tab • 342, 347
Lighting Modes • 72, 263, 323
Lights Menu • 258, 261, 263, 372, 373
Lights Menu Shortcuts • 73, 437
Lights Toolbar • 73, 363, 372
LightWave 3D Binary and Object Export (.lwo, .lw) • 476, 495
LightWave 3D Binary and Object Import (.lwo, lw) • 476, 496
LightWave Scene Export (.lws) • 476, 497
LightWave Scene Import (.lws) • 476, 498
Line Styles Tab • 150, 154, 155, 159, 160, 354, 382
List Box Properties • 238

Copyright © Right Hemisphere 2007. All Rights Reserved.

List of supplied 2D Templates • 224, 243
List of supplied 3D Templates • 224, 244
Local File Search • 48, 49
Local File Search Panel • 49, 306
Logging In and Out of Servers • 207, 309, 405, 406
Login Dialog • 208

M

Making a Cross Section • 149
Making Objects Unique • 101
Managing Files, Themes and Thumbnails • 7, 52, 303, 304, 321
Manual Callouts • 146, 357
Maps Tab • 107, 352, 481
Markup Global Settings • 153
Markup Settings • 151, 153
Markups • 8, 135, 138, 151, 172, 174, 335
Material Properties Dialog • 87, 106, 108, 193, 289, 318, 333, 335, 349, 350, 371, 415
Materials • 87, 88, 106, 356, 384, 415
Materials Folder Menus • 333, 415
Materials List • 106, 331, 356
Materials List Menu • 106, 356, 415
Materials Menu • 259, 262
Materials Menu Shortcuts • 106, 356, 438
Materials Tab • 55, 58, 107, 349, 389, 479, 500, 534
Max File Export (.max) • 476, 499
Max File Import (.max) • 427, 429, 476, 501
Maximum Edge Length • 46
Maya ASCII Scene Export (.ma) • 476, 503
Maya ASCII Scene Import (.ma) • 476, 504
Maya Binary Scene Export (.mb) • 476, 505
Maya Binary Scene Import (.mb) • 476, 506
Maya Interchange File Format (.iff) • 449, 464
Maya Interchange File Format Export (.iff) • 449, 464
Measurement Global Settings Dialog • 172, 174, 374
Measurements • 8, 152, 171, 373, 444
Measurements Toolbar • 363, 373
Menu bar • 246
Menu Bar • 246, 248, 300, 391, 394, 395, 422
Menu Bar Menu • 413
Merge File • 249, 250
Merge Options • 53, 90, 250
Merging Files • 7, 53, 250, 384, 516
Mesh Select Right-Click Menu • 374, 398
Mesh Select Toolbar • 363, 374
Messages Dialog • 255, 256, 421
Metadata Browser • 105, 326
Metadata Columns • 141
Metadata Dialog • 105, 220, 222, 239, 241, 242, 326, 376, 455, 457
MicroStation CAD Graphic Import (.dgn) • 559, 608
Mirror Dialog • 278, 280
Mirroring Objects • 101
Model Render Modes • 225, 230
Model View Controls • 225, 229
Model View Properties Dialog • 78, 327, 413
Model Views • 76, 78, 135, 151, 169, 230, 240, 327, 393, 413, 454, 561, 562
Model Views Menu • 392, 393
Model Views Panel • 78, 79, 313, 327
Model Views Panel Menu • 327, 413
Modifying Preferences • 219, 404, 405
modules • 19
Modules • 13, 40, 246, 363
Motion Path Edit • 282, 284
Mouse Controls • 15
Move Pivot Point • 99, 366
Move Tool • 74, 96, 365
Moving Pictures Expert Group Video Format (.m1v, .mpeg, .mpg) • 544, 546
MPEG Audio File Format (.mpa, .mp2, .mp3) • 541, 542
MS DirectX Properties Dialog • 293
Musical Instrument Digital Interface (.mid, .midi) • 541, 542
My 3D Models Tab • 387

N

Navigating the Viewports • 61, 64, 77
Navigation Toolbar • 363, 375
Nendo Files (.ndo) • 476, 507
Neutral Part File CAD Edition Import • 610
Neutral Part File Import (.neu) • 559, 610
Neutral Part File Module Import • 559, 612
Normal Deviation • 43, 340, 576, 578, 581, 582, 585, 589, 594, 596, 605, 607, 608, 611, 613, 617, 619, 624, 626, 630, 631, 634, 636, 638, 640, 642, 644, 647, 649, 653, 655, 659, 661, 665, 667, 669
Normals • 83
Note Global Settings • 154
NURBS Curve Tab • 347
NURBS Surface Tab • 347
NURBS Tab • 291

O

Object and Material Selection • 88, 95, 96, 97, 98, 99
Object Editing Shortcuts • 438
Object Editing Tools • 64, 87, 94, 100, 148, 151, 329, 365, 366
Object Elements Toolbar • 171, 172, 173
Object File Format Vector Graphics (.off) • 476, 507
Object File Format Vector Graphics Export (.off) • 476, 507
Object Position Controls • 94, 96, 313, 329, 365
Object Properties Dialog • 69, 82, 87, 104, 106, 182, 262, 291, 299, 318, 333, 335, 350, 354, 396, 414, 416, 418, 419
Object Right-Click Menu • 395
Object Tab • 336
Objects and Materials • 7, 87

Copyright © Right Hemisphere 2007. All Rights Reserved.

Open • 249
Open a File • 431
Open Inventor File Export (.iv) • 477, 508
Open Inventor File Import (.iv) • 477, 508
OpenEXR Bitmap (.exr) • 449, 465
OpenEXR Bitmap Export (.exr) • 449, 466
OpenFlight Scene Description Database (.flt) • 477, 509
OpenFlight Scene Description Database Export (.flt) • 477, 510
OpenGL CPP Code Export (.cpp) • 477, 511
Opening Files • 7, 39, 40, 53, 110, 111, 117, 118, 119, 120, 122, 124, 128, 130, 131, 133, 136, 148, 152, 159, 162, 163, 182, 184, 188, 189, 199, 204, 222, 239, 249, 275, 377, 380, 401, 451, 452, 453, 458, 459, 460, 461, 462, 463, 464, 465, 466, 467, 468, 469, 470, 471, 472, 473, 474, 475, 478, 479, 480, 481, 482, 483, 484, 485, 486, 487, 488, 489, 490, 491, 492, 493, 494, 495, 496, 497, 498, 499, 501, 503, 504, 505, 506, 507, 508, 509, 510, 511, 513, 514, 516, 517, 518, 519, 520, 521, 522, 524, 525, 526, 527, 529, 530, 531, 533, 534, 535, 537, 538, 539, 542, 543, 545, 546, 548, 550, 551, 552, 553, 555, 556, 558, 561, 562, 563, 564, 566, 568, 569, 570, 572, 574, 575, 577, 580, 582, 584, 587, 588, 589, 592, 593, 595, 599, 600, 602, 605, 606, 608, 610, 612, 616, 618, 623, 625, 629, 631, 634, 636, 638, 640, 642, 644, 646, 648, 652, 654, 658, 660, 664, 666, 669, 673, 674
Options Dialog • 61, 82, 84, 191, 273, 280, 334, 390
Output Tab • 162, 266, 268
Override Linestyle Settings • 159, 160, 371

P

Pan Tool • 64, 348, 375
Panels • 246
Parasolid CAD File Import (.x_b, .x_t, .xmt, .xmt_txt) • 559, 616
Parasolid CAD File Module Import • 559, 618
Parts Panel • 104, 135, 357
Parts Panel Menu • 416
PDF Publishing Module • 8, 13, 14, 194, 196, 220, 223, 239, 240, 361, 452, 453
Plugin Manager • 8, 40, 55, 180, 273
Plugins Tab • 180
PMI • 225, 230
PMI Settings Dialog • 156, 220, 371, 376, 377
PMI Toolbar • 220, 363, 375
Points File (.pts) • 477, 513
Polygon File Format (.ply) • 477, 513
Portable Graymap Graphics File Import (.pgm) • 477, 513
Portable Network Graphics (.png) • 449, 467
Portable Network Graphics Export (.png) • 449, 467
Portable Pixelmap Graphic (.ppm) • 449, 468
Portable Pixelmap Graphic Export (.ppm) • 449, 468
POV-Ray RAW Triangle (.raw) • 477, 514
POV-Ray RAW Triangle Export (.raw) • 477, 514
Power Render Object (.pro) • 477, 514
Preferences Dialog • 212, 219, 309, 405
Preset Views • 76, 279, 340, 391, 392, 393, 394
Primitives and Modifiers • 8, 87, 182, 264, 265, 337, 340, 341, 396, 561
Print a File • 431
Pro/ENGINEER Assembly CAD Edition Import • 623
Pro/ENGINEER Assembly Import (.asm) • 560, 622
Pro/ENGINEER Assembly Module Import • 560, 625
Pro/ENGINEER Part CAD Edition Import • 629
Pro/ENGINEER Part Import (.prt*, .xpr) • 560, 628
Pro/ENGINEER Part Module Import • 560, 631
Processing Large Files • 188, 445
Product Menus • 15
Product Tutorials • 35
Protein Data Bank Import (.pdb) • 477, 515
Publisher's Paintbrush Bitmap Graphic (.pcx) • 450, 468
Publishing to PDF • 239
Publishing Web Pages • 8, 55, 183, 476, 477
Pull Apart Mode • 95, 365

Q

Quake Character Model I (.mdl) • 477, 517
Quake Character Model II (.md2) • 477, 517
Quake Character Model III (.md3) • 477, 518
Quake Map File (.map) • 477, 518
Quicktime 3D Metafile (.3dm, .3dmf) • 477, 518

R

Radiance Picture Format (.hdr) • 450, 468
Randomize Object Settings • 134, 367
Randomize Objects • 134, 367
Raster Illustration • 162, 266, 268, 372
RAX Extended RAW Triangles (.rax) • 477, 519
Ray-Trace Render Settings Dialog • 239, 455
Raytracer Tab • 270
Realight Settings • 185, 378
Realight Tool • 8, 13, 14, 116, 184, 363, 378
Realight Toolbar • 378
Real-Time Shader (.fx) • 557, 558
Reduce Model Dialog • 124, 125
Reduce Model Settings • 124, 126
Reducing Models • 116, 124, 367, 442, 447
Refining Searches • 48, 51, 247, 384
Refreshing the Gateway Panel • 209, 218, 406, 410, 411
registration • 28
Registry Settings • 30

Copyright © Right Hemisphere 2007. All Rights Reserved.

Reloading Files • 7, 40, 54
Remove Internal Parts Dialog • 119
Remove Small Parts Settings • 121, 367
Removing Assets and Items • 212, 216, 217, 411
Removing Internal Parts • 116, 119, 367, 397
Removing Small Parts • 116, 120, 367
Renaming and Deleting Objects • 87, 104
Render 3D Files • 251, 252
Render Auto Fly-Around Dialog • 190, 267
Render Menu • 63, 114, 188, 248, 266, 268, 270, 271, 378
Render Mode Menu Shortcuts • 72, 435
Render Modes • 63, 70, 71, 82, 258, 287, 288, 322, 334, 349, 368, 369, 391, 392
Render Statistics Window • 188, 268, 270
Render Tab • 188, 259, 268, 292, 378
Render To Dialog • 189, 266
Render Toolbar • 188, 268, 363, 378
Render Window • 188, 268, 269
Renderer Properties • 162, 188, 189, 190, 253, 266, 267, 268, 292, 378
Rendering Callouts • 135, 137, 188
Rendering Scenes • 8, 188, 270, 378
Rendering to File • 189, 266, 378
Rendering to Multiple Images and Video Clips • 190, 267, 378
Renumber Parts • 140, 142
Rescale Animation Dialog • 417, 418
Resizing Components • 424
RH Controls • 226
RH Controls menu • 225
Rhinoceros 3D Model Export (.3dm) • 477, 520
Rhinoceros 3D Model Import (.3dm) • 477, 521
RIFF MIDI File (.rmi) • 541, 543
Right Hemisphere Binary (.rh) • 477, 522
Right Hemisphere Binary Export (.rh) • 55, 69, 78, 169, 192, 477, 522
Right Hemisphere Material (.rhm) • 554, 555
Right Hemisphere Material Export (.rhm) • 554, 555
Right Hemisphere Shader (.rhs) • 557, 558
Right-Click Menus • 63, 67, 88, 247, 254, 258, 390
Right-Click Selection Menu • 398
Rotate Pivot Point • 99, 366
Rotate Tool • 65, 74, 76, 97, 365, 375, 446
Rotating Objects • 97, 446

S

Save As • 55, 249, 250, 266
Save Frames • 249, 251
Saving Files • 7, 55, 181, 183, 189, 190, 239, 250, 252, 253, 266, 380, 451, 452, 453, 458, 459, 460, 461, 462, 463, 464, 465, 466, 467, 468, 469, 470, 471, 472, 473, 474, 475, 478, 479, 480, 481, 482, 483, 484, 485, 486, 487, 488, 489, 490, 491, 492, 493, 494, 495, 496, 497, 498, 499, 501, 503, 504, 505, 506, 507, 508, 509, 510, 511, 513, 514, 516, 517, 518, 519, 520, 521, 522, 524, 525, 526, 527, 529, 530, 531, 533, 534, 535, 537, 538, 539, 542, 543, 545, 546, 548, 550, 551, 552, 553, 555, 556, 558, 559, 561, 562, 563, 564, 566, 568, 569, 570, 572, 574, 575, 577, 580, 582, 584, 587, 588, 589, 592, 593, 595, 599, 600, 602, 605, 606, 608, 610, 612, 616, 618, 623, 625, 629, 631, 634, 636, 638, 640, 642, 644, 646, 648, 652, 654, 658, 660, 664, 666, 669, 673, 674
Scalable Vector Graphics (.svg) • 450, 469
Scalable Vector Graphics Export (.svg) • 450, 469
Scale Tool • 66, 98, 348, 366, 375
Scene Component Panel Icons • 330, 331
Scene Components Panel • 87, 88, 103, 104, 106, 247, 254, 313, 330, 331, 336, 438, 593, 610, 616, 622, 628, 646, 652, 658
Scene Components Panel Menus • 330, 413
Scene Components Panel Shortcuts • 438
Scene Elements • 61, 63, 70, 81, 85, 87
Scene Properties Dialog • 72, 82, 84, 333, 395, 414
Scene Right-Click Menu • 80, 169, 329, 394
Scene Tree • 102, 331, 332
Scene Tree Menus • 414
SDRC I-DEAS Model Import (.arc, .mf1) • 560, 634
SDRC I-DEAS Package Import (.pkg) • 560, 636
SDRC I-DEAS Universal Import (.unv) • 560, 638
Search Panel • 48, 301, 302, 304, 305, 308, 380
Search Tab • 27, 311
Search Tabs • 48, 49, 50, 51, 213, 214, 215, 302, 311, 388
Searching for Assets • 210, 213, 308, 311, 388
Searching for Files • 7, 48, 305, 306, 384, 388
Searching for Help Topics • 23
Searching for Objects • 87, 91
Searching for Words or Phrases Using Wildcards • 23
Select Objects Dialog • 88, 89, 91, 254, 331, 358
Selecting Callouts • 135, 138
Selecting Materials • 93, 107
Selecting Objects • 87, 88, 102, 135, 156, 193, 358, 365, 391
Selection Controls • 225, 231
Selection Shortcuts • 88, 438
Separating Meshes • 116, 122, 367, 397

Copyright © Right Hemisphere 2007. All Rights Reserved.

Sequence Properties Dialog • 317, 417
Sequences • 111, 131, 316
Server Node Menu • 406
Shaders • 192, 558
Shaders Tab • 192, 389
Shockwave 3D File Export (.w3d) • 477, 524, 525
Shockwave Flash Object (.swf) • 470
Shockwave Flash Object Export (.swf) • 450, 470
Shockwave Web Page Export (.html) • 183, 477, 524, 525
Showing and Hiding Objects • 87, 102
Silicon Graphics Image (.rgb, .rgba, .int, .inta) • 450, 471
Silo3D Export (.sia) • 477, 526
Silo3D Import (.sia) • 477, 526
Skin Information • 337, 343
Slide Show Tab • 294
Slide Shows • 8, 191, 294, 380
Smoothing Menu • 258, 262, 336
Smoothing Menu Shortcuts • 439
SOFTIMAGE Picture (.pic) • 450, 471
SOFTIMAGE|XSI (.xsi) • 477, 527
SOFTIMAGE|XSI Export (.xsi) • 477, 527
Software Z-Buffer Properties Dialog • 294
Software Z-Buffer Tab • 271
Solid Tools Toolbar • 363, 379
SolidEdge 3D CAD Model Part Import (.par) • 560, 640
SolidWorks Assembly and Part Import (.sldasm, .sldlfp, .sldprt) • 560, 642
SolidWorks Drawing (.slddrw) • 560, 644
Sound Format (.snd) • 541, 543
Special Controls • 16
Standard ACIS Binary CAD Edition Import • 652
Standard ACIS Binary Import (.sab) • 560, 652
Standard ACIS Binary Module Import • 560, 654
Standard ACIS Text CAD Edition Import • 646
Standard ACIS Text Import (.sat) • 560, 646
Standard ACIS Text Module Import • 560, 648
Standard Toolbar • 291, 363, 380
Standard View Controls • 225, 232
Start in Full-Screen Mode • 432
Start in Standard Mode • 432
Start in View Mode • 432
Statistics Information • 337, 343
Status bar • 246
Status Bar • 247, 255, 256, 260, 421
Step Controls • 196, 225, 233
STEP Files CAD Edition Import • 658
STEP Files Import (.step, .stp) • 560, 658
STEP Files Module Import • 560, 660
Step Options Dialog • 359, 360
Step Properties Dialog • 194, 196, 234, 361, 420
Steps • 8, 75, 135, 194, 233, 244, 359
Steps Metadata • 194, 196, 361
Steps Panel • 194, 313, 359
Steps Panel Menu • 194, 359, 420
Stereolithography File (.stl) • 477, 529
Stereolithography Rapid Prototyping Data Export (.stl) • 477, 530
Summary Tab • 334
Sun/NeXT/DEC Audio (.au) • 541, 543
support • 28
Support • 28
support form • 28
Surface Deviation • 42, 43, 47, 340, 379, 570, 572, 576, 577, 580, 582, 585, 589, 594, 596, 605, 606, 608, 611, 613, 617, 619, 625, 630, 631, 634, 636, 638, 640, 642, 644, 647, 649, 653, 655, 659, 661, 664, 667, 669
Surfaces Toolbar • 363, 381
Symbols Tab • 389

T

Tagged Image File Format (.tif, .tiff) • 450, 472
Tagged Image File Format Export (.tif, .tiff) • 450, 472
Tessellation Settings • 42, 444, 570, 572, 578, 583, 586, 590, 591, 597, 608, 613, 614, 619, 620, 624, 626, 627, 632, 633, 649, 650, 655, 656, 661, 662, 667, 670, 671
Text Field Properties • 237
Text File (.txt) • 672, 673
Texture Maps Tab • 55, 59, 107, 500
Textures • 87, 106, 107, 325
Textures Tab • 108, 192, 294, 389, 496, 498
TGA File (.tga) • 450, 473
TGA File Export (.tga) • 450, 473
Thrustlines Toolbar • 381
Thumbnails Tab • 296
Tolerance Settings • 47, 590, 591, 597, 614, 620, 627, 633, 650, 656, 662, 671
toolbar • 246
Toolbars • 246, 255, 363, 422
Tools Menu • 248, 273, 494
Tools Right-Click Menu • 394, 395, 396, 414, 416, 417, 419
Tracked Row Binary Import (.trb) • 547, 553
Tracked Row Character Export (.trc) • 547, 553
Tracked Row Character Import (.trc) • 547, 553
Transformation Tab • 349
Troubleshooting • 28
Tutorials • 28

U

Unify Normals Dialog • 118
Unifying Normals • 116, 118, 279, 366, 397
Unigraphics Parts and Assemblies CAD Edition Import • 664
Unigraphics Parts and Assemblies Import (.prt) • 560, 664
Unigraphics Parts and Assemblies Module Import • 560, 666
Uninstalling Deep Exploration • 30, 52, 303, 304, 321, 448

Copyright © Right Hemisphere 2007. All Rights Reserved.

Universal 3D Export (.u3d) • 223, 239, 453, 477, 531
Universal 3D Import (.u3d) • 477, 533
update • 28
Update Asset Dialog • 216, 412
Update Dialog • 30, 298
Updating • 30, 52, 149, 153, 154, 155, 159, 160, 298, 303, 304, 321, 377, 405, 448
Updating Assets • 216, 411, 412
Upload Assembly Dialog • 210, 407
Upload Assets Dialog • 210, 407
Upload Associated Files Dialog • 216, 411
Uploading Assemblies • 206, 209, 210, 310, 406, 407, 410, 411
Uploading Assets and Assemblies • 161, 209, 212, 215, 309, 310, 410
Uploading Single Assets • 206, 209, 210, 310, 406, 407, 410, 411
Usage Tab • 354
User Details • 409
User Interface • 7, 15, 37, 246
User-Defined Views • 76, 263, 391, 394
Using Deep Exploration • 36, 37
Using Gateway • 206, 207
Using Nested Expressions • 24
Using the Color Selector • 61
Using the Cross-Sectioning plane • 148
Using the HTML Help Viewer • 21
Using the Reference Online • 7, 20
Using Viewports • 55, 63, 74, 75, 78, 95, 97, 106, 194, 255, 266, 288, 299, 391, 422, 424, 439, 523
UV Mapping • 8, 13, 14, 116, 184, 185, 198, 363, 383
UV Mapping Settings • 199, 200, 383
UV Mapping Toolbar • 383
UV Relax Settings • 202, 383
UV Remap • 202, 204, 383
UV Tab • 343, 348

V

VDA File Import (.vda) • 560, 669
Vector Illustration • 55, 135, 137, 162, 163, 372, 449, 450, 559
Vector Illustration Settings Dialog • 239, 240, 241, 454, 456
Vectorize Callouts • 141, 142
Version ID • 246
Video Controls • 114, 313, 362
View Menu • 248, 255, 385, 386, 401, 413, 421
Viewing and Hiding Markups • 220, 222
Viewing and Modifying Properties • 206, 218, 406, 408, 410, 411
Viewing Scenes • 7, 61, 531
Viewpoints • 76
Viewport Background • 84, 395
Viewport Grid • 85, 260, 281, 288, 369
Viewport Layouts • 69
Viewport Right-Click Menus • 61, 76, 77, 391
Viewports • 104, 247, 299
Views • 74
Views Menu • 61, 76, 77, 263, 392, 393
Views Menu Shortcuts • 76, 439
VRML Worlds Export (.wrl, .vrml) • 477, 534
VRML Worlds Import (.wrl, .vrml) • 477, 535

W

Waveform Audio (.wav) • 541, 543
Wavefront Material (.mtl) • 537, 554, 556
Wavefront Object Export (.obj) • 477, 537, 556
Wavefront Object Import (.obj) • 477, 538
Web Search • 48, 49, 306
Web Search Panel • 49, 306
Web Search Settings Dialog • 306, 307
What's New in Deep Exploration • 33
Windows Bitmap Graphic (.bmp, dib) • 450, 474
Windows Bitmap Graphic Export (.bmp, .dib) • 450, 474
Windows Cursor File (.cur) • 450, 475
Windows Icon File (.ico) • 450, 475
Windows Metafile (.wmf) • 450, 475
Windows Run Length Encoded Bitmap (.rle) • 450, 475
WinRAR Compressed Archive (.rar) • 672, 673
Workspace • 63, 246, 247, 299

X

XAML Export (.xaml) • 477, 539

Z

Z-Buffer Render Settings Dialog • 239, 455
ZIP Archive (.zip) • 672, 674
Zoom Tools • 67, 269, 348, 375, 390

Copyright © Right Hemisphere 2007. All Rights Reserved.