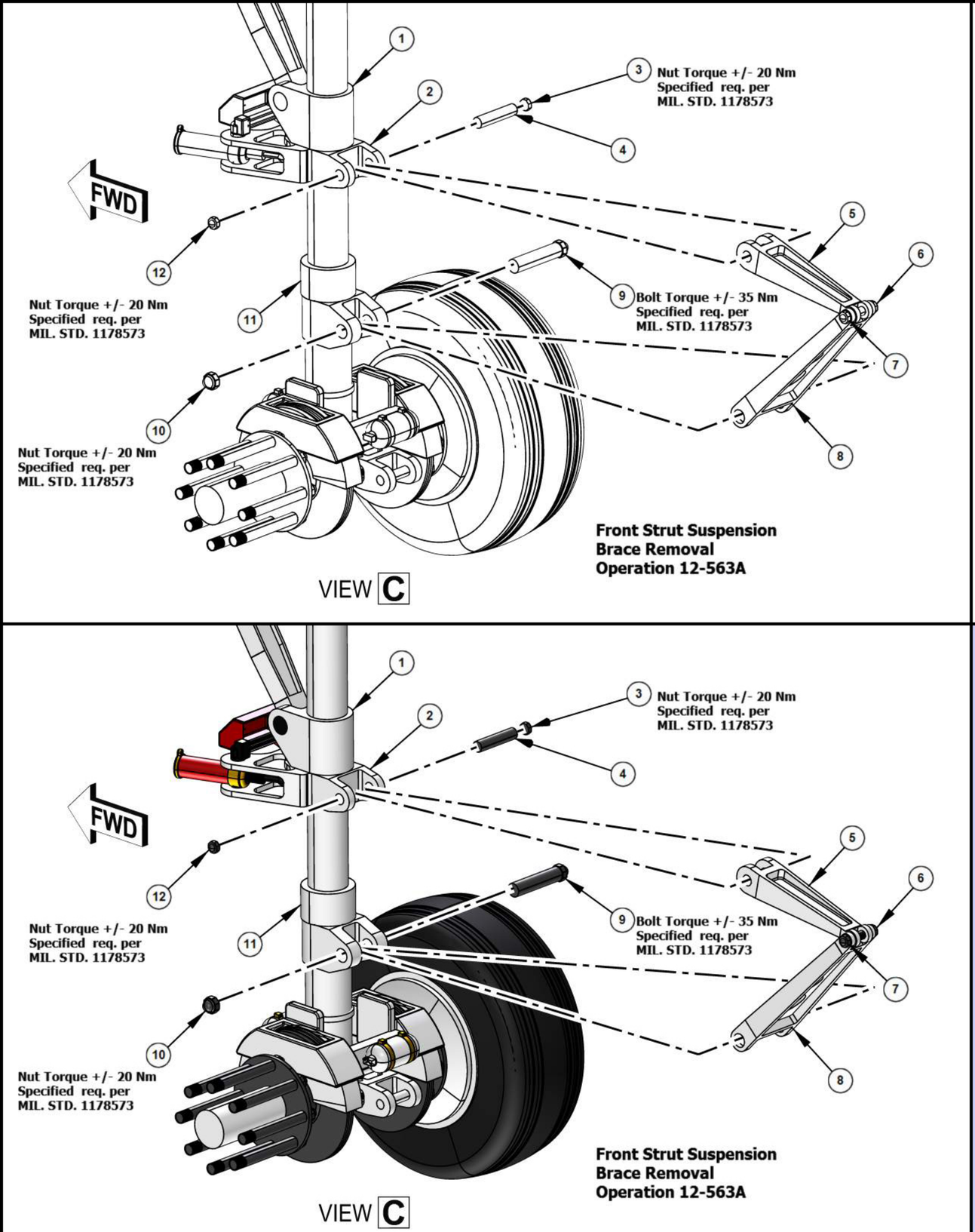
FWD
1
2
3
Nut Torque +/- 20 Nm
Specified req. per
MIL. STD. 1178573
4
5
6
7
8
9
Bolt Torque +/- 35 Nm
Specified req. per
MIL. STD. 1178573
10
Nut Torque +/- 20 Nm
Specified req. per
MIL. STD. 1178573
11
12
Nut Torque +/- 20 Nm
Specified req. per
MIL. STD. 1178573
Front Strut Suspension
Brace Removal
Operation 12-563A
VIEW C

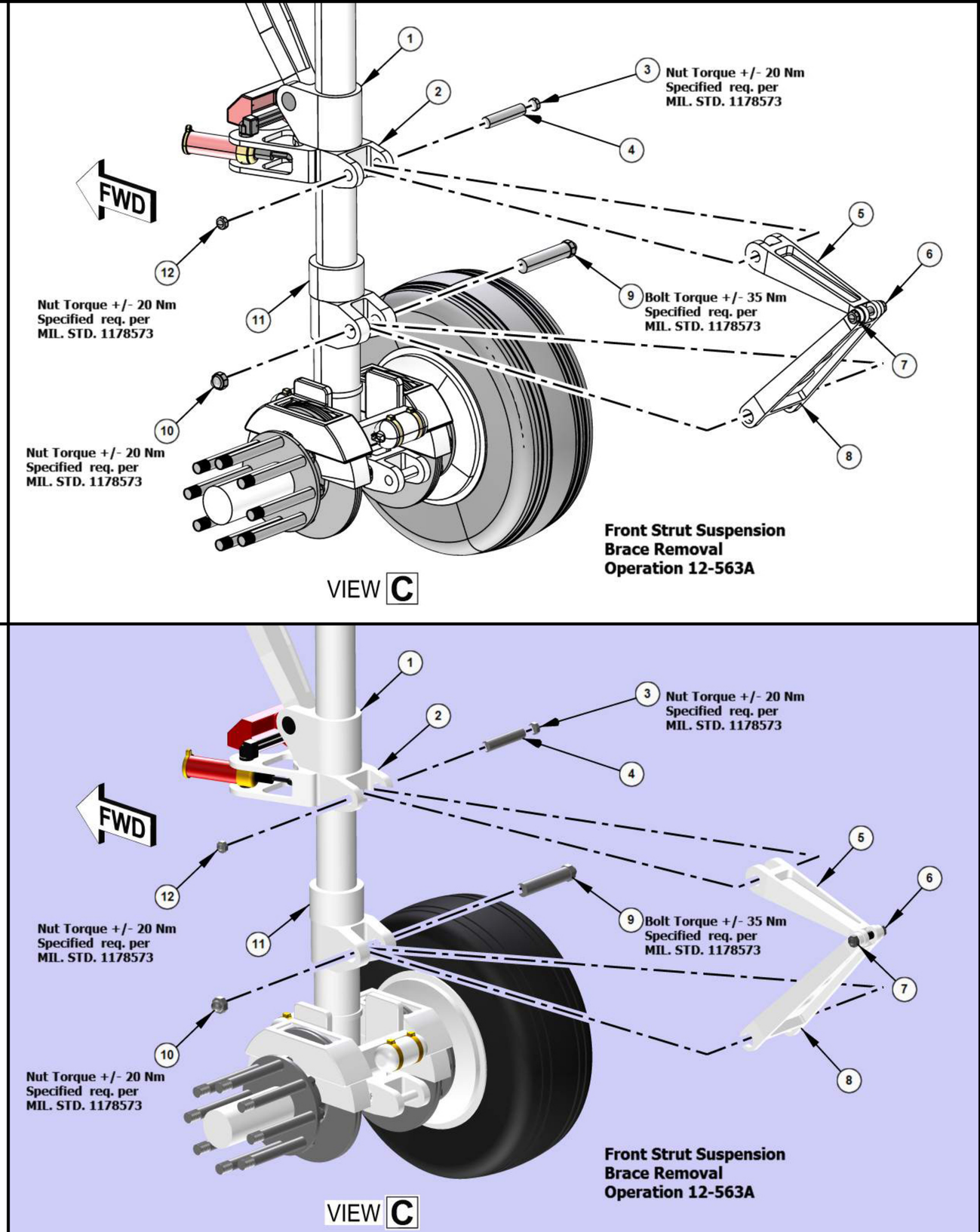
FWD
1
2
3
Nut Torque +/- 20 Nm
Specified req. per
MIL. STD. 1178573
4
5
6
7
8
9
Bolt Torque +/- 35 Nm
Specified req. per
MIL. STD. 1178573
10
Nut Torque +/- 20 Nm
Specified req. per
MIL. STD. 1178573
11
12
Nut Torque +/- 20 Nm
Specified req. per
MIL. STD. 1178573
Front Strut Suspension
Brace Removal
Operation 12-563A
VIEW C