Bill of Materials

...	
Landing_Gear_Assy	Qty : 1
Shaft	Qty : 3
Hub_Cap	Qty : 2
Upright_Shaft	Qty : 1
Bracket_Shock	Qty : 1
2.5_rod	Qty : 1
Slider	Qty : 1
Connector	Qty : 1
Box	Qty : 1
Container	Qty : 2
Ball_Socket_Joint	Qty : 2
Socket_Joint	Qty : 2
Ball_Joint	Qty : 2
Tube	Qty : 3
Upright_Arm_Support	Qty : 1
Main_Arm	Qty : 1
Y	Qty : 1
Y_Rod	Qty : 2
Delta	Qty : 1
Body	Qty : 1
Headlight_Big	Qty : 2
9.664	Qty : 1
1.25x7	Qty : 2
1.645rx10	Qty : 1
2.5x12	Qty : 1
Headlight_Small	Qty : 2
16rod	Qty : 1
Hub	Qty : 2
Disk_Brake	Qty : 2
Brake_Pad_Caliper	Qty : 2
Brake_Pad_Casement	Qty : 2
Brake_Pad	Qty : 4
Bellows	Qty : 2
Wheel	Qty : 2
Bellows_Strap	Qty : 4
bolt_cap	Qty : 4
Wheel_Bolt_Assy	Qty : 16
Wheel_Bolt	Qty : 16
Wheel_Bolt_Nut	Qty : 16
2.5_min_Nut	Qty : 2
Bellows_cap	Qty : 2

Total Labor Time

41 Mins

Step Labor Time

Tools

Warnings!

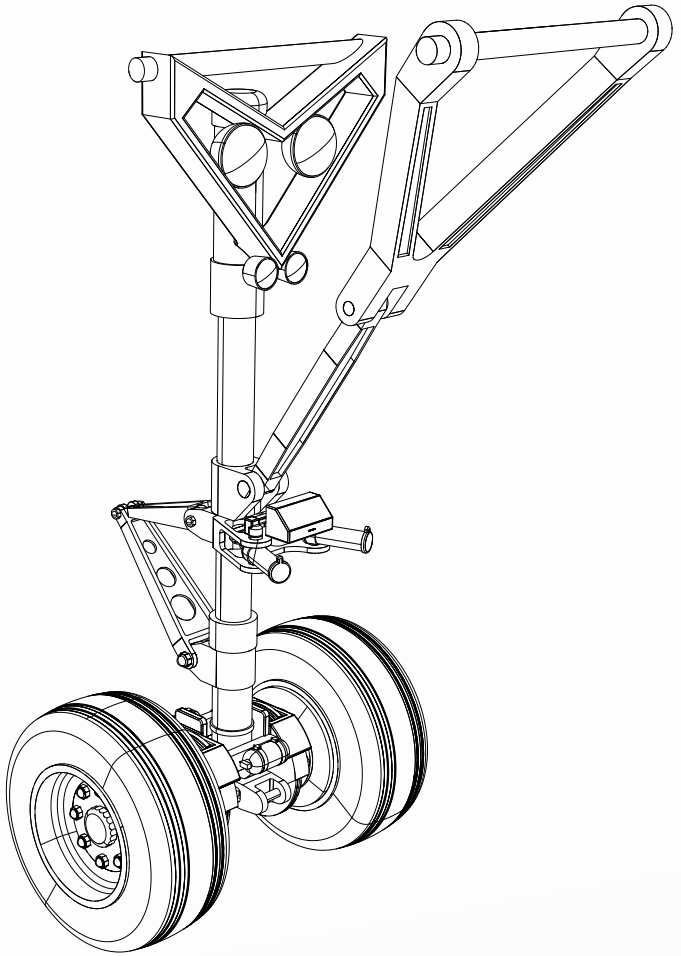

First Step | Next Step | Play All Steps | Rewind All Steps | Previous Step | Last Step

Solid | Illustration | Shaded Illustration

Part Info | Instructions | PDF Info

The 2004B CATIA v5 file was converted using Right Hemisphere's Deep Exploration CAD Edition v5.0. The resulting high resolution polygonal file after conversion had 301,559 polygons. The next task was to optimize (reduce) the polygons down as small as possible, but to retain the visual fidelity of the model. This was done manually by selecting areas of interest such as the wheels and using the Polygon Reduction tool within Deep Exploration CAD Edition. You can also dynamically reduce the polygons of the model while viewing the results. The goal of this process was to cut the model polygon count by half or more and retain as much visual fidelity as possible. By reducing the amount of polygons, you are essentially reducing the file size of

Designer: Mark Schafer | Date Checked: 7-27-00 | Material: N/A

Steps Available

Step 1
Step 2
Step 3
Step 4
Step 5
Step 6

3D Help