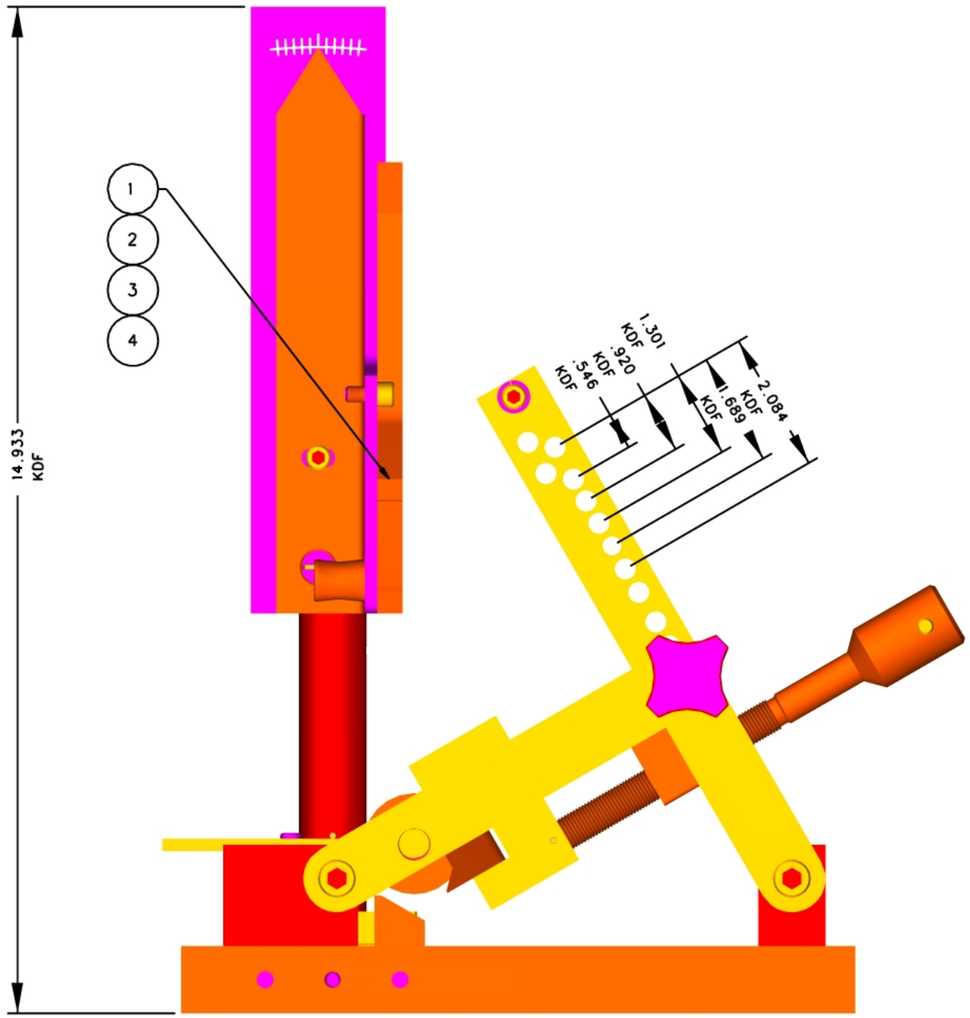

Solid | Illustration | Shaded Illustration | PMI On/Off | Hide Selected | Hide Unselected | Show All

Bill of Materials

Model Views

Current Model View

Title Block

Notes

Tolerances